(PROJECT NAME HERE)

(LIFT STATION NAME HERE)

SITE ADDRESS: (ADDRESS HERE)

DATE: (DATE HERE)

CITY PROJECT NUMBER: (IF APPLICABLE)

CITY OF BEND, DESCHUTES COUNTY, OREGON

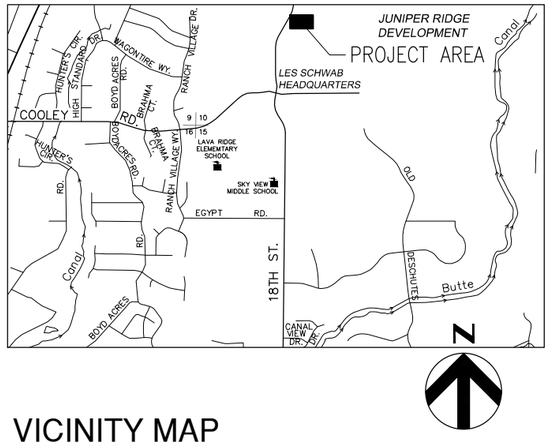

VICINITY MAP

SCALE: N.T.S.

OWNER:

CITY OF BEND

UTILITY'S DEPARTMENT
62975 BOYD ACRES ROAD
BEND, OR 97701

SITE PLAN

SCALE: N.T.S.

EXAMPLE

APPROVALS:

CITY OF BEND
ENGINEER:_____

NOTE: SIGNATURE DOES NOT GRANT APPROVAL TO COMMENCE CONSTRUCTION.

[REQUIRED UTILITY:_____]

[REQUIRED UTILITY:_____]

[REQUIRED UTILITY:_____]

[REQUIRED UTILITY:_____]

[REQUIRED UTILITY:_____]

PERMANENT BENCH MARKS USED:

IDENTIFICATION	DESCRIPTION
NOT APPLICABLE	

FOR SAMPLE ONLY

RECORD DRAWINGS

REVISIONS DRAWN BY: XX DATE: XX/XX/XX

THESE RECORD DRAWINGS HAVE BEEN PREPARED, IN PART, ON THE BASIS OF INFORMATION COMPILED BY OTHERS. THEY ARE NOT INTENDED TO REPRESENT IN DETAIL THE EXACT LOCATION, TYPE OF COMPONENT NOR MANNER OF CONSTRUCTION. THE ENGINEER WILL NOT BE RESPONSIBLE FOR ANY ERRORS OR OMISSIONS WHICH HAVE BEEN INCORPORATED INTO THE RECORD DRAWINGS.

FOR SEALS AND SIGNATURES

(PROJECT NAME)
(LIFT STATION NAME)

COVER

DESCHUTES COUNTY, OREGON

REVISIONS:

(CONSULTANT ENGINEER NAME, ADDRESS & PHONE NUMBER)

DESIGNED BY:
DRAWN BY:
SCALE:
FILE:
DATE:

VERIFY SCALES
0 1"
BAR EQUALS ONE INCH ON ORIGINAL DRAWING

SHEET:

G-000

COB # (XXXXXX)

DRAWING INDEX

1	G-000	COVER
2	G-001	INDEX, SIGNATURE BLOCK, AND NOTES
3	G-002	GENERAL LEGEND AND PIPING SYMBOLS
4	G-003	PROCESS EQUIPMENT LEGEND AND PIPING SYMBOLS
5	G-004	INSTRUMENTATION LEGEND AND SYMBOLS
6	G-005	ELECTRICAL NOTES AND STANDARD SYMBOLS
7	G-006	ELECTRICAL NOTES AND STANDARD SYMBOLS
8	G-007	GENERAL STRUCTURAL NOTES
9	G-008	BASIS OF DESIGN
1	C-001	DEMOLITION AND EROSION CONTROL PLAN
11	C-002	SITE PLAN
12	C-003	GRADING AND DRAINAGE
13	C-004	GRAVITY SEWER PLAN AND PROFILE
14	C-005	FORCE MAIN SEWER PLAN AND PROFILE
15	C-006	CIVIL DETAILS
16	L-001	LANDSCAPE PLAN AND DETAILS (INCLUDE IF REQUIRED)
17	L-002	IRRIGATION PLAN AND DETAILS (INCLUDE IF REQUIRED)
18	M-101	LIFT STATION MECHANICAL PLAN
19	M-102	LIFT STATION MECHANICAL SECTION
20	M-103	MECHANICAL DETAILS
21	M-104	MECHANICAL DETAILS
22	I-001	STANDARD P&ID CONSTANT
24	I-002	TEMPLATE (50 I/Os) PANEL LAYOUT
25	I-003	(50 I/Os) BILL OF MATERIALS
26	I-004	(50 I/Os) PWR WIRING SCHEMATIC
27	I-005	(50 I/Os) PWR WIRING SCHEMATIC
28	I-006	(50 I/Os) DIGITAL INPUT MODULE 1
29	I-007	(50 I/Os) DIGITAL INPUT MODULE 2
30	I-008	(50 I/Os) ANALOG INPUT MODULE
31	I-009	INTRINSIC SAFETY RELAY PANEL (ISRP)
32	I-010	COMMUNICATION NETWORK DIAGRAM
33	E-001	ELECTRICAL SITE PLAN
34	E-002	MAIN CONTROL CABINET LAYOUT
35	E-003	ELECTRICAL ONE LINE DIAGRAM
36	E-004	CONDUIT AND WIRE SCHEDULE
37	E-005	WETWELL ISOLATION PEDESTAL
38	E-006	ELECTRICAL DETAILS
39	E-007	PUMP 1 WIRING DIAGRAM
40	E-008	PUMP 2 WIRING DIAGRAM
41	E-009	PUMP STATION FLOW LOOP SHEET
42	E-010	WETWELL LEVEL LOOP SHEET
43	E-011	STANDBY GENERATOR LOOP SHEET
44	E-012	AUTO-TRANSFER SWITCH LOOP SHEET
45	E-013	WETWELL HIGH HIGH LEVEL LOOP SHEET
46	E-014	HATCH INTRUSION LOOP SHEET
47	E-015	MAIN CONTROL CAB INSTRUSION LOOP SHEET

SECTION AND DETAIL DESIGNATION

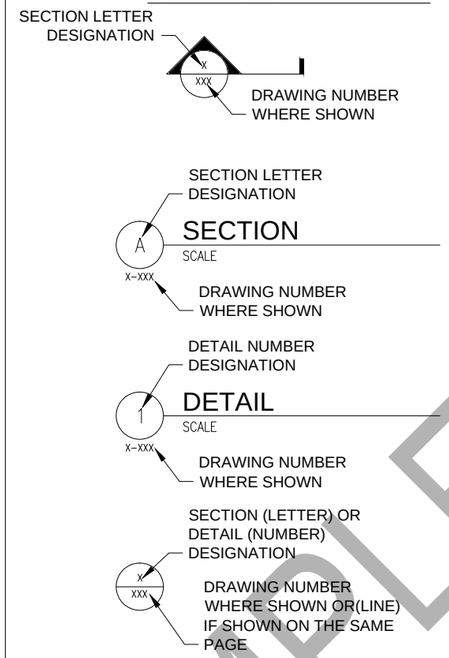

DESIGN DETAIL DESIGNATION

NOTES:

1. ALL DESIGN DETAILS ARE TYPICAL AND MUST BE USED IF DESIGN DETAIL DESIGNATION IS NOT SHOWN.
2. THE TERM STANDARD DETAIL, OR A FORM OF IT, IS SYNONYMOUS WITH DESIGN DETAIL AND REFERS TO THE DESIGN DETAILS FOUND IN THIS SET OF CONTRACT DOCUMENTS.
3. THE DESIGN DETAILS REPRESENT THE CHARACTER AND NATURE OF THE WORK REQUIRED THROUGHOUT THE PROJECT. ALL ASSOCIATED WORK SHALL BE IN ACCORDANCE WITH THE DESIGN DETAILS SHOWN WHETHER THE DETAILS ARE SPECIFICALLY REFERENCED OR NOT.

KEY NOTE DESIGNATION

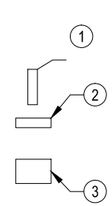

(#) KEY NOTES:

(1) NOTE.

(2) NOTE.

(3) NOTE.

CONSTRUCTION NOTES:

1. NO CONSTRUCTION SHALL BE STARTED WITHOUT A NOTICE TO PROCEED BY THE CITY ENGINEERING DEPARTMENT. THE CITY ENGINEERING DEPARTMENT AND THE DESIGN ENGINEER SHALL BE NOTIFIED AT LEAST 24 HOURS PRIOR TO THE START OF CONSTRUCTION. ANY CONSTRUCTION WORK DONE PRIOR TO NOTICE TO PROCEED BEING ISSUED OR WITHOUT INSPECTION WILL BE REJECTED.
2. CONTRACTOR SHALL VERIFY ALL CONDITIONS ON THE JOB SITE INCLUDING BUT NOT LIMITED TO, ALL DIMENSIONS, GRADES, ELEVATIONS, EXTENT AND COMPATIBILITY TO THE EXISTING SITE CONDITIONS, AND WITH THE WORK DESCRIBED ON THE ENGINEER'S DRAWINGS. ANY DISCREPANCIES OR UNEXPECTED CONDITIONS THAT AFFECT OR CHANGE THE WORK DESCRIBED IN THE CONTRACT DOCUMENTS SHALL BE BROUGHT TO THE ENGINEER'S ATTENTION IMMEDIATELY. CONTRACTOR SHALL NOT PROCEED WITH ANY OF THE WORK IN THE AREA OF DISCREPANCIES UNTIL ALL SUCH DISCREPANCIES ARE RESOLVED. IF THE CONTRACTOR CHOOSES TO DO SO, THEN IT IS UNDERSTOOD THAT THE CONTRACTOR IS CHOOSING TO PROCEED AT THE CONTRACTOR'S OWN RISK AND SHALL INCUR ALL COSTS, IF ANY TO RESOLVE THE ISSUES TO THE SATISFACTION OF THE ENGINEER.
3. A CITY INSPECTOR ACTING ON BEHALF OF THE CITY MAY REQUIRE REVISIONS IN PLANS TO SOLVE UNFORESEEN PROBLEMS THAT MAY ARISE IN THE FIELD.
4. ALL CONSTRUCTION WORK AND INSTALLATIONS SHALL CONFORM TO THE CITY STANDARDS AND SPECIFICATIONS, AND ALL WORK SHALL BE SUBJECT TO THE APPROVAL OF THE CITY.
5. IT SHALL BE THE RESPONSIBILITY OF THE CONTRACTOR TO CONTACT "UNDERGROUND LOCATE SERVICE" AT 1-800-332-2344 AT LEAST 48 BUSINESS-DAY HOURS PRIOR TO THE START OF CONSTRUCTION FOR THE LOCATION OF POWER, GAS, CABLE TV AND TELEPHONE UNDERGROUND FACILITIES. THE CONTRACTOR WILL ALSO BE RESPONSIBLE FOR CONTACTING THE APPROPRIATE PUBLIC AGENCY FOR THE LOCATION OF UNDERGROUND FACILITIES.
6. ALL UTILITIES SHOWN ARE ACCURATE TO THE EXTENT OF AVAILABLE RECORDS AND KNOWLEDGE. NO POTHOLING TO VERIFY LOCATIONS AND ELEVATIONS WAS AUTHORIZED BY THE OWNER. THE CONTRACTOR HAS THE TOTAL RESPONSIBILITY TO VERIFY THE LOCATION OF EXISTING UNDERGROUND UTILITIES AND TO NOTIFY THE UTILITY COMPANIES WHEN WORKING IN THEIR PROXIMITY. CONTRACTOR TO VERIFY LOCATION OF EXISTING UTILITIES PRIOR TO CONSTRUCTION. OREGON LAW REQUIRES YOU TO FOLLOW RULES ADOPTED BY THE OREGON UTILITY NOTIFICATION CENTER. THOSE RULES ARE SET FORTH IN OAR 952-001-0010 THROUGH 952-001-0090. YOU MAY OBTAIN COPIES OF THE RULES BY CALLING THE CENTER. THE TELEPHONE NUMBER FOR THE OREGON UTILITY NOTIFICATION CENTER IS (503)232-2987.
7. ALL GRADING SHALL BE IN CONFORMANCE WITH THE CURRENT CITY STANDARDS AND SPECIFICATIONS AND CURRENT GRADING ORDINANCE. ALL SUBGRADE MATERIAL SHALL BE CONSIDERED CLASS A AND COMPACTED TO 95% OF OPTIMUM DENSITY. AS SPECIFIED IN THESE PLANS, ALL FILL MATERIAL SHALL BE COMPACTED TO 95% RELATIVE COMPACTION PER THE CITY TESTING REQUIREMENTS.
8. ALL FINAL CUT SLOPES SHALL NOT EXCEED A GRADE OF 3 TO 1 VERTICAL UNLESS OTHERWISE APPROVED. FILL SLOPES SHALL NOT EXCEED A GRADE OF 2 HORIZONTAL TO 1 VERTICAL UNLESS OTHERWISE APPROVED BY THE ENGINEER.
9. ALL UNSUITABLE SOILS MATERIALS, RUBBISH AND DEBRIS RESULTING FROM GRADING OPERATIONS SHALL BE REMOVED FROM THE JOB SITE AND DISPOSED OF PROPERLY.
10. THE CONTRACTOR SHALL EMPLOY ALL LABOR, EQUIPMENT, AND METHODS REQUIRED TO PREVENT DUST IN AMOUNTS DAMAGING TO PROPERTY, CULTIVATED VEGETATION AND DOMESTIC ANIMALS OR CAUSING A NUISANCE TO PERSONS OCCUPYING BUILDINGS IN THE VICINITY OF THE JOB SITE. THE CONTRACTOR SHALL BE RESPONSIBLE FOR ANY DAMAGE CAUSED BY DUST RESULTING FROM CONSTRUCTION.
11. THE CONTRACTOR SHALL FOLLOW ALL APPLICABLE INDUSTRIAL SAFETY REGULATIONS. THE CITY AND DESCHUTES COUNTY AND THEIR OFFICIALS, THE ENGINEER, AND THE OWNER SHALL NOT BE RESPONSIBLE FOR ENFORCING SAFETY REGULATIONS.
12. MATERIAL QUANTITIES USED, NOTED, OR PROVIDED IN A SEPARATE ITEMIZED QUANTITY TAKE-OFF ARE AN ENGINEER'S OPINION OF PROBABLE MATERIAL REQUIREMENTS, AND IS AN ESTIMATE ONLY. CONTRACTOR'S HAVE THE SOLE RESPONSIBILITY OF MAKING THEIR OWN QUANTITY TAKE-OFF AND COST ESTIMATE.
13. ALL WORK SHALL BE PERFORMED BY A CITY APPROVED CONTRACTOR.
14. UTILITIES SHALL HAVE THE RIGHT TO INSTALL, MAINTAIN, AND OPERATE THEIR EQUIPMENT ABOVE AND BELOW GROUND AND ALL OTHER RELATED FACILITIES WITHIN THE PUBLIC UTILITY EASEMENTS (PUE) IDENTIFIED ON THIS PLAT MAP AS MAY BE NECESSARY OR DESIRABLE IN SERVING THE LOTS IDENTIFIED HEREIN, INCLUDING THE RIGHT OF ACCESS TO SUCH FACILITIES AND THE RIGHT TO REQUIRE THE REMOVAL OF ANY OBSTRUCTIONS INCLUDING TREES AND VEGETATION THAT MAY BE PLACED WITH IN THE PUE AT THE LOT OWNERS EXPENSE. AT NO TIME MAY ANY PERMANENT STRUCTURES BE PLACED WITHIN THE PUE OR ANY OTHER OBSTRUCTION WHICH INTERFERES WITH THE USE OF THE PUE WITHOUT PRIOR WRITTEN APPROVAL OF THE UTILITIES AND FACILITIES IN THE PUE.
15. CITY ENGINEER'S SIGNATURE DOES NOT CONSTITUTE APPROVAL OF FACILITIES PROPOSED ON PRIVATE PROPERTY. SEPARATE PERMITS ISSUED BY THE BUILDING DEPARTMENT ARE REQUIRED AND SHALL BE OBTAINED BY THE DEVELOPER FOR FACILITIES LOCATED OUTSIDE OF THE PUBLIC RIGHT-OF-WAY.
16. ANY WORK WITHIN EXISTING PUBLIC RIGHT-OF-WAY OR DEDICATED CITY EASEMENTS REQUIRES A SEPARATE RIGHT-OF-WAY EXCAVATION PERMIT OBTAINED FROM THE CITY ENGINEERING DIVISION.

SANITARY SEWER SYSTEM

APPROVED FOR CONSTRUCTION:

DATE

FOR SAMPLE ONLY

RECORD DRAWINGS

REVISIONS DRAWN BY: XX DATE: XX/XX/XX

THESE RECORD DRAWINGS HAVE BEEN PREPARED, IN PART, ON THE BASIS OF INFORMATION COMPILED BY OTHERS. THEY ARE NOT INTENDED TO REPRESENT IN DETAIL THE EXACT LOCATION, TYPE OF COMPONENT NOR MANNER OF CONSTRUCTION. THE ENGINEER WILL NOT BE RESPONSIBLE FOR ANY ERRORS OR OMISSIONS WHICH HAVE BEEN INCORPORATED INTO THE RECORD DRAWINGS.

EXAMPLE

FOR SEALS AND SIGNATURES

(PROJECT NAME)
GENERAL

INDEX, NOTES, AND SIGNATURE BLOCK

DESCHUTES COUNTY, OREGON

REVISIONS:

(CONSULTANT ENGINEER NAME, ADDRESS & PHONE NUMBER)

DESIGNED BY:
DRAWN BY:
SCALE:
FILE:
DATE:

VERIFY SCALES
0 1"
BAR EQUALS ONE INCH ON ORIGINAL DRAWING

SHEET:
G-001

COB # (XXXXXX)

ABBREVIATIONS

@	AT
A/B	AERATION BASIN
AB	ANCHOR BOLT
ABDN	ABANDONED
ACBD	ACOUSTICAL BOARD
ACST	ACOUSTICAL TILE
AD	AREA DRAIN
ADDL	ADDITIONAL
ADJ	ADJACENT
AFF	ABOVE FINISH FLOOR
AHR	ANCHOR
AL	ALUMINUM
ALTN	ALTERNATE
APPROX	APPROXIMATE
APVD	APPROVED
ARCH.	ARCHITECTURAL
ASSY	ASSEMBLY
AVG	AVERAGE
BD	BOARD
BETW	BETWEEN
BF	BOTTOM FACE
BLDG	BUILDING
BM	BEAM
BOD	BOTTOM OF DUCT
BOT	BOTTOM
BRG	BEARING
BST	BOTTOM OF STEEL
CAB.	CABINET
CCP	CONCRETE CYLINDER PIPE
C/C	CHLORINE CONTACT
CEM PLAS	CEMENT PLASTER
CHEM	CHEMICAL
CHKD PL	CHECKERED PLATE
CFM	CUBIC FEET PER MINUTE
CI	CAST IRON
CIP	CAST IN PLACE
CJ	CONSTRUCTION JOINT
℄ OR CL	CENTER LINE
CL 2	CHLORINE
CLG	CEILING
CLR	CLEAR
CMP	CORRUGATED METAL PIPE
CMU	CONCRETE MASONARY UNITS
COB	CITY OF BEND
COL	COLUMN
CONC	CONCRETE
CONN	CONNECTION
CONST	CONSTRUCTION
CONT	CONTINUOUS
COR	CORNER
CPLG	COUPLING
CPVC	CHLORINATED POLYVINYL CHLORIDE
C TO C	CENTER TO CENTER
CTR	CENTER
CTRD	CENTERED
CU FT	CUBIC FEET
∠	CENTRAL ANGLE
DAFT	DISSOLVED AERATION FLOTATION THICKENING
DBA	DEFORMED BAR ANCHOR
DBL	DOUBLE
DET	DETAIL
DIA	DIAMETER
DIAG	DIAGONAL
DIM	DIMENSION
DIP.	DUCTILE IRON PIPE
DIR	DIRECTION
DISCH	DISCHARGE
DN	DOWN
DS	DOWN SPOUT
DWG	DRAWING
DWL	DOWEL
E	EAST
EA	EACH
ECC	ECCENTRIC
EF	EACH FACE
EFL	EFFLUENT
EL	ELEVATION
ELB	ELBOW
ELEC	ELECTRICAL
EP	EDGE OF PAVEMENT
EQL	EQUAL
EQL SP	EQUALLY SPACED
EQPT	EQUIPMENT
EW	EACH WAY
EXP JT	EXPANSION JOINT
EXT	EXTERIOR, EXTERNAL, EXTENSION
EXST	EXISTING

FA	FIRST AID KIT
FAB	FABRICATION
FFE	FINISHED FLOOR ELEVATION
FACIL	FACILITY
FCA	FLANGED COUPLING ADAPTER
FCTY	FACTORY
FD	FLOOR DRAIN
FDN	FOUNDATION
FEXT	FIRE EXTINGUISHER
FFL	FINISHED FLOOR
FLL	FLOW LINE ELEVATION
FLEX	FLEXIBLE
FLG	FLANGE
FL	FLOOR
FNSH	FINISH
FOT	FLAT ON TOP
GA	GAUGE, GAGE
GB	GRAB BAR
GAL	GALLON
GALV	GALVANIZED
GALVS	GALVANIZED STEEL
GPD	GALLONS PER DAY
GRD	GROUND
GRTG	GRATING
GVL	GRAVEL
GWB	GYPSUM WALLBOARD
GYP PLAS	GYPSUM PLASTER
H.A.S	HEADED ANCHOR STUD
HD	HUB DRAIN
HDNR	HARDNER
HDR	HEADER
HGT	HEIGHT
HM	HOLLOW METAL
HORIZ	HORIZONTAL
HPT	HIGH POINT
HR	HANDRAIL
HR	HOUR
HS	HIGH STRENGTH
I&C	INSTRUMENTATION AND CONTROL
ID	INSIDE DIAMETER
IE	INVERT ELEVATION
I.F.	INSIDE FACE
INFL	INFLUENT
INSTL	INSTALL
INSUL	INSULATION
INTR	INTERIOR
INVT	INVERT
ITG	INSULATED TEMPERED GLASS
JT	JOINT
L	LENGTH OF CURVE
LB	POUNDS
LB/D	POUNDS PER DAY
LG	LONG
LLV	LONG LEG VERTICAL
LNTL	LINTEL
LONG.	LONGITUDINAL
LPT	LOW POINT
LT	LIGHT
MATL	MATERIAL
MAX	MAXIMUM
MB	MACHINE BOLT
MCC	MOTOR CONTROL CENTER
MECH	MECHANICAL
MFR	MANUFACTURER
MGD	MILLION GALLONS PER DAY
MG/L	MILLIGRAMS PER LITRE
MH	MANHOLE
MIN	MINIMIM
MISC	MISCELLANEOUS
MLSS	MIXED LIQUOR SUSPENDED SOLIDS
MLVSS	MIXED LIQUOR VOLATILE SUSPENDED SOLIDS
MO	MASONARY OPENING
MON	MONUMENT
MTG	MOUNTING
MTL	METAL
MTR	METERING
N	NORTH
NIC	NOT IN CONTRACT
NO.	NUMBER
NOM	NOMINAL
NORM	NORMAL
NTS	NOT TO SCALE

OC	ON CENTER
OD	OUTSIDE DIAMETER, OVERFLOW DRAIN
O.F.	OUTSIDE FACE
OFE	OWNER-FURNISHED EQUIPMENT
OVHD	OVERHEAD
O TO O	OUT TO OUT
OPNG	OPENING
OPP	OPPOSITE
PC	POINT OF CURVATURE
PCV	PRESSURE CONTROL VALVE
P/C	PRIMARY CLARIFIERS
PD	PEAK DAY
PHF	PEAK HOUR FLOW
PI	POINT OF INTERSECTION
P&ID	PROCESS AND INSTRUMENTATION DIAGRAM
PJF	PREMOLDED JOINT FILLER
PL	PLATE
PLAM	PLASTIC LAMINATE
PLYWD	PLYWOOD
POC	POINT ON CURVE
POT	POINT ON TANGENT
PR	PAIR
PRV	PRESSURE REDUCING VALVE
PS	PUMP STATION
PSF	POUNDS PER SQUARE FOOT
PSI	POUNDS PER SQUARE INCH
PT	POINT OF TANGENCY
PTD	PAPER TOWEL DISPENSER
PTD/R	PAPER TOWEL DISPENSER/RECPTACLE
PTRD	PRESSURE TREATED
PVC	POINT OF VERTICAL CURVATURE
PVC	POLYVINYL CHLORIDE
PVI	POINT OF VERTICAL INTERSECTION
PVMT	PAVEMENT
PVT	POINT OF VERTICAL TANGENCY
QDRNT	QUADRANT
QTY	QUANTITY
R	R-VALUE (INSULATION)
R OR RAD	RADIUS
R	RISER
RC	REINFORCED CONCRETE
RCP	REINFORCED CONCRETE PIPE
RD	ROOF DRAIN
RDCR	REDUCER
REHAB	REHABILITATE
REINF	REINFORCE, REINFORCED, REINFORCING
REQD	REQUIRED
RESIL	RESILIENT
RM	ROOM
RO	ROUGH OPENING
RST	REINFORCING STEEL
S	SOUTH
S.A.T.	SUSPENDED ACOUSTICAL TILE
S/C	SECONDARY CLARIFIERS
SCBA	SELF CONTAINED BREATHING APPARATUS
SCHED	SCHEDULE
SD	SOAP DISPENSER, STORM DRAIN
SECT	SECTION
SG	SAFETY GLASS
SH	SHEET
SHTG	SHEETING
SIM	SIMILAR
SLV	SHORT LEG VERTICAL
S.O.	SHUTOFF
SPECD	SPECIFIED
SPECS	SPECIFICATIONS
SPG	SPACING
SQ	SQUARE
SST	STAINLESS STEEL
STA	STATION
STD	STANDARD
STIF	STIFFENER
STOR	STORAGE
STR	STRAIGHT
STRUCT	STRUCTURAL, STRUCTURE
STL	STEEL
SWD	SIDE WATER DEPTH
SYMM	SYMMETRICAL
T	TINTED
T	TANGENT LENGTH
T&B	TOP AND BOTTOM
TAS	THREADED ANCHOR STUD
TC	TOP OF CONCRETE, TOP OF CURB
TEMP	TEMPERED, TEMPERATURE
TF	TOP FACE

TG	TEMPERD GLASS
THK	THICK
THRD	THREADED
T.O.	TOP OF
TOG	TOP OF GROUT
TPD	TONS PER DAY
TPI	TURNOUT POINT OF INTERSECTION
TRANSV	TRANSVERSE
TRD	TREAD
TSS	TOTAL SUSPENDED SOLIDS
TST	TOP OF STEEL
TTD	TOILET TISSUE DISPENSER
TW	TOP OF WALL
TYP	TYPICAL
UBC	UNIFORM BUILDING CODE
UH	UNIT HEATER
UON	UNLESS OTHERWISE NOTED
UNO	UNLESS NOTED OTHERWISE
UR	URINAL
V	VENT, VOLT
VAC	VACUUM
V.A.T.	VINYL ASBESTOS TILE
VC	VERTICAL
VERT	VERTICAL
VCP	VITRIFIED CLAY PIPE
VTR	VENT THRU ROOF
VWC	VINYL WALL COVERING
W	WEST, WIDE FLANGE (BEAM)
W/	WITH
WAS	WASTE ACTIVATED SLUDGE
WC	WATER CLOSET
WD	WOOD
WG	WIRE GLASS
WH	WATER HEATER
WK	WEEK
WP	WORKING POINT
WR GWB	WATER RESISTANT GYPSUM WALLBOARD
WR	WASTE RECEPTACLE
WS	WATER STOP, WATERSURFACE, WELDED STEEL
WTR	WATER
WWM	WELDED WIRE MESH
XFMR	TRANSFORMER
YD	YARD
YR	YEAR

INSTRUMENTATION EQUIPMENT ABBREVIATIONS LIST

ACV	ANALYZER CONTROL VALVE
AE	ANALYZER ELEMENT
AI	ANALYZER INDICATOR
AIC	ANALYZER INDICATING CONTROLLER
AIT	ANALYZER INDICATING TRANSMITTER
ANT	ANTENNA
AR	ANALYZER RECORDER
ARC	ANALYZER RECORDING CONTROLLER
ASH	ANALYZER SWITCH HIGH
ASHH	ANALYZER SWITCH HIGH HIGH
ASL	ANALYZER SWITCH LOW
ASLL	ANALYZER SWITCH LOW LOW
ARIC	ANALYTICAL RATIO INDICATING CONTROLLER
AT	ANALYZER TRANSMITTER
CAB	CABINET
EXI	VOLTS/MILLIVOLTS TO CURRENT TRANSDUCER
EXP	VOLTS TO PRESSURE TRANSDUCER
FCV	FLOW CONTROL VALVE
FE	FLOW ELEMENT
FI	FLOW INDICATOR
FIC	FLOW INDICATING CONTROLLER
FIR	FLOW INDICATING RECORDER
FIT	FLOW INDICATING TRANSMITTER
FQ	FLOW TOTALIZER/INTEGRATOR
FQI	FLOW TOTALIZER INDICATOR
FQIT	FLOW TOTALIZER INDICATING TRANSMITTER
FR	FLOW RECORDER
FSH	FLOW SWITCH HIGH
FSHH	FLOW SWITCH HIGH HIGH
FSHL	FLOW SWITCH HIGH LOW
FSL	FLOW SWITCH LOW
FSLL	FLOW SWITCH LOW LOW
FT	FLOW TRANSMITTER
GWY	GATEWAY
HC	HAND CONTROLLER
HIC	HAND INDICATING CONTROLLER
HS	HAND SWITCH
HOA	HAND-OFF-AUTO SWITCH
ICI	INFINET TO COMPUTER INTERFACE
KY	TIME RELAY
L/R	LOCAL/REMOTE SWITCH
LC	LEVEL CONTROLLER
LCV	LEVEL CONTROL VALVE
LE	LEVEL ELEMENT
LG	LEVEL GAUGE
LI	LEVEL INDICATOR
LIC	LEVEL INDICATING CONTROLLER
LISH	LEVEL INDICATING SWITCH HIGH
LIT	LEVEL INDICATING TRANSMITTER
LR	LEVEL RECORDER
LRC	LEVEL RATIO CONTROLLER
LSH	LEVEL SWITCH HIGH
LSHH	LEVEL SWITCH HIGH HICH
LSHL	LEVEL SWITCH HIGH LOW
LSL	LEVEL SWITCH LOW
LSLL	LEVEL SWITCH LOW LOW
LSM	LEVEL SWITCH MIDDLE
LT	LEVEL TRANSMITTER
MCD	MOTORIZED CONTROL DAMPER
MPA	ANALOG MARSHALLING PANEL
MPC	MARSHALLING PANEL CONTROL
MPD	DIGITAL MARSHALLING PANEL
MSL	MOTION SWITCH
NE	MOISTURE PROBE
NI	MOISTURE INDICATOR
NSH	MOISTURE SWITCH HIGH
OJB	OPTICAL JUNCTION BOX

PCU	PROCESS CONTROL UNIT
PCV	PRESSURE CONTROL VALVE
PDI	PRESSURE DIFFERENTIAL INDICATOR
PDIC	PRESSURE DIFF. INDICATING CONTROLLER
PDIT	PRESSURE DIFF. INDICATING TRANSMITTER
PDS	PRESSURE DIFFERENTIAL SWITCH
PDSH	PRESSURE DIFFERENTIAL SWITCH HIGH
PDSL	PRESSURE DIFFERENTIAL SWITCH LOW
PDT	PRESSURE DIFFERENTIAL TRANSMITTER
PE	PRESSURE ELEMENT
PHE	pH ELEMENT
PHR	pH RECORDER
PI	PRESSURE INDICATOR
PIC	PRESSURE INDICATING CONTROLLER
PIT	PRESSURE INDICATING TRANSMITTER
PR	PRESSURE RECORDER
PRN	PRINTER
PSH	PRESSURE SWITCH HIGH
PSHH	PRESSURE SWITCH HIGH HIGH
PSHL	PRESSURE SWITCH HIGH LOW
PSL	PRESSURE SWITCH LOW
PSLL	PRESSURE SWITCH LOW LOW
PT	PRESSURE TRANSMITTER
PXI	PRESSURE TO CURRENT TRANSDUCER
PXP	PRESSURE TO PRESSURE TRANSDUCER
PY	PRESSURE CONVERTER (SIGNAL BOOST)
PZ	PRESSURE POSITIONER (ADJUST FOR PRESSURE CONTROL VALVE)
RIO	REMOTE INPUT/OUTPUT PROCESSOR
SAMP	SAMPLER
SE	SPEED ELEMENT
SI	SPEED INDICATOR (TACHOMETER)
ST	SPEED TRANSMITTER
SV	SOLENOID VALVE
SWR	SWITCHER
SY	SPEED CONVERTER (TRANSDUCER)
SZ	SPEED ACTUATOR (ENGINE)
TC	TEMPERATURE CONTROLLER
TCV	TEMPERATURE CONTROL VALVE
TE	TEMPERATURE ELEMENT
TI	TEMPERATURE INDICATOR
TIC	TEMPERATURE INDICATING CONTROL
TIS	TEMPERATURE INDICATING SWITCH
TIT	TEMPERATURE INDICATING TRANSMITTER
TQI	TORQUE INDICATOR
TQIC	TORQUE INDICATING CONTROL
TQIT	TORQUE INDICATING TRANSMITTER
TQR	TORQUE RECORDER
TQS	TORQUE SWITCH
TQSH	TORQUE SWITCH HIGH
TQT	TORQUE TRANSMITTER
TR	TEMPERATURE RECORDER
TSH	TEMPERATURE SWITCH HIGH
TSHH	TEMPERATURE SWITCH HIGH HIGH
TSL	TEMPERATURE SWITCH LOW
TSLL	TEMPERATURE SWITCH LOW LOW
TT	TEMPERATURE TRANSMITTER
TW	THERMAL WELL
TY	TEMPERATURE SELECT
UI	MULTIVARIABLE INDICATOR
UR	MULTIVARIABLE RECORDER
USH	MULTIVARIABLE SWITCH HIGH
VDT	VIDEO DISPLAY
WI	WEIGHT INDICATOR
WIT	WEIGHT INDICATING TRANSMITTER
XV	REMOTELY CONTROLLED ON-OFF VALVE
ZI	POSITION INDICATOR
ZIS	POSITION INDICATING SWITCH
ZIT	POSITION INDICATING TRANSMITTER
ZS	POSITION SWITCH
ZSC	POSITION SWITCH CLOSED
ZSO	POSITION SWITCH OPEN
ZT	POSITION TRANSMITTER

PIPE IDENTIFICATION

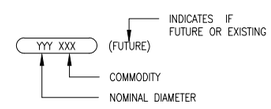

EQUIPMENT NUMBERING CONVENTION

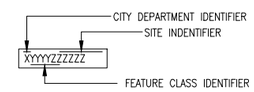

GENERAL NOTES

1. THIS DRAWING IS GENERAL IN NATURE, SOME ABBREVIATIONS SHOWN HERE MAY NOT BE USED.
2. SEE DRAWING G-04 FOR PROCESS EQUIPMENT LEGEND AND PIPING SYMBOLS.
3. SEE DRAWING G-05 FOR INSTRUMENTATION SYMBOLS.
4. SEE DRAWING G-06 AND G-07 FOR ELECTRICAL SYMBOLS.
5. SEE DRAWING G-08 FOR STRUCTURAL NOTES.
6. ADDITIONAL ABBREVIATIONS FOR INTRUMENTATION EQUIPMENT CAN BE FOUND USING THE FUNCTIONAL IDENTIFICATION MATRIX ON DRAWING G-05.

FOR SAMPLE ONLY

RECORD DRAWINGS

REVISIONS DRAWN BY: XX DATE: XX/XX/XX

THESE RECORD DRAWINGS HAVE BEEN PREPARED, IN PART, ON THE BASIS OF INFORMATION COMPILED BY OTHERS. THEY ARE NOT INTENDED TO REPRESENT IN DETAIL THE EXACT LOCATION, TYPE OF COMPONENT NOR MANNER OF CONSTRUCTION. THE ENGINEER WILL NOT BE RESPONSIBLE FOR ANY ERRORS OR OMISSIONS WHICH HAVE BEEN INCORPORATED INTO THE RECORD DRAWINGS.

EXAMPLE

FOR SEALS AND SIGNATURES

(PROJECT NAME)
GENERAL

GENERAL LEGEND AND PIPING SYMBOLS

DESCHUTES COUNTY, OREGON

REVISIONS:

(CONSULTANT ENGINEER NAME, ADDRESS & PHONE NUMBER)

DESIGNED BY:
DRAWN BY:
SCALE:
FILE:
DATE:

VERIFY SCALES
0 1"
BAR EQUALS ONE INCH ON ORIGINAL DRAWING

SHEET:
G-002

COB # (XXXXXX)

EQUIPMENT

- VFD — VARIABLE SPEED CONTROLLER (ELEC)
- BAR SCREEN, MECHANICAL
- INLINE SLUDGE SCREEN
- BLOWER OR CENTRIFUGAL FAN
- SLIDING VANE COMPRESSOR
- BOILER
- BURNER, WASTE GAS
- CENTRIFUGE
- CHILLER
- COMPRESSOR, ROTARY SCREW
- COMPRESSOR, PISTON
- DIFFUSER HEADER
- ENGINE
- EJECTOR, PNEUMATIC
- FILTER OR FILTER-SILENCER, INLET AIR
- RAG — RIGHT ANGLE GEAR
- TURBINE GENERATOR
- GRINDER
- HEAT EXCHANGER, PLATE TYPE
- HEAT EXCHANGER, SPIRAL TYPE
- HEAT EXCHANGER, STRAIGHT TUBE TYPE
- HEAT EXCHANGER, U-TUBE TYPE
- MIXER
- MIXER, HORIZONTAL SURFACE
- MIXER, INLINE STATIC
- M — MOTOR
- PUMP, CENTRIFUGAL
- PUMP, DIAPHRAGM
- PUMP, DIAPHRAGM OPERATED
- PUMP, GEAR
- PUMP, IN-LINE CENTRIFUGAL
- PUMP, METERING
- PUMP, PROGRESSIVE CAVITY
- PUMP, ROTARY LOBE
- PUMP, SUBMERSIBLE
- PUMP, VERTICAL
- PUMP, LINE SHAFT
- WEIR
- STOP LOG
- SLIDE GATE (NORMALLY CLOSED)
- SLIDE GATE (NORMALLY OPEN)
- RECTANGULAR BUTTERFLY VALVE (NORMALLY CLOSED)
- RECTANGULAR BUTTERFLY VALVE (NORMALLY OPEN)
- SLIDE GATE (NORMALLY CLOSED)
- SLIDE GATE (NORMALLY OPEN)
- TELESCOPIC GATE VALVE

EQUIPMENT

- FLAP GATE
- SCREEN, ROTARY OVERFLOW
- SILENCER
- CONDENSATE TANK
- RECEIVER OR PRESSURE VESSEL
- TANK, DOUBLE WALLED
- TANK

VALVES

- THREE WAY VALVE SOLENOID VALVE
- GATE VALVE (NORMALLY OPEN)
- GATE VALVE (NORMALLY CLOSED)
- PLUG VALVE (NORMALLY OPEN)
- PLUG VALVE (NORMALLY CLOSED)
- BALL VALVE (NORMALLY OPEN)
- BALL VALVE (NORMALLY CLOSED)
- BUTTERFLY VALVE
- BUTTERFLY DAMPER VALVE
- GLOBE VALVE
- DIAPHRAGM VALVE
- ANGLE VALVE
- FLOAT VALVE
- PINCH VALVE
- NEEDLE VALVE
- DOUBLE LEAF CHECK VALVE
- CHECK VALVE
- KO — BALL CHECK VALVE
- REDUCED PRESSURE BACKFLOW PREVENTER
- DOUBLE CHECK VALVE BACKFLOW PREVENTER
- PUMP DISCHARGE VALVE (TRIPLE DUTY)
- GAUGE OR ROOT VALVE
- KNIFE GATE VALVE
- BALANCING COCK
- CIRCUIT BALANCING VALVE
- THERMOSTATICALLY CONTROLLED VALVE
- PRESSURE REGULATING VALVE (EXTERNAL SENSING)
- PRESSURE REGULATING VALVE (INTERNAL SENSING)
- BACK PRESSURE REGULATING VALVE
- PRESSURE AND VACUUM RELIEF VALVE
- VACUUM RELIEF VALVE
- PRESSURE RELIEF VALVE
- IN-LINE, SPRING LOADED RELIEF VALVE
- MUD VALVE

VALVE OPERATORS

SOLENOID	HAND JACK	W/ POSITIONER	DIAPHRAGM (PRESSURE BALANCE)	DIAPHRAGM (SPRING OPPOSED)	SELF REGULATING	PRESSURE BALANCE	PISTON	MOTOR
S								M

FITTINGS/LINE STRAINERS

UNION	CONCENTRIC	ECCENTRIC FLAT BOTTOM	ECCENTRIC FLAT TOP	FLEX CONNECTOR	BLIND	FLANGES	EXPANSION JOINT	FLAME ARRESTOR	WELDED CAP
	3 X 2	3 X 2	3 X 2		OPEN CLOSED				

QUICK CONNECT	DRAIN TO GRADE/GROUND	SPRAY NOZZLE	STEAM TRAP	DIAPHRAGM SEAL	PIPING SPECIFICATION BREAK	SPEC. CHANGE	TIE POINT	RUPTURE DISC
	X		T		PIPE SPEC | PIPE SPEC		TP-###	X" SET @ XXX PSIG

Y-STRAINER W/VALVE	Y-STRAINER W/VALVE	Y-STRAINER PLUGGED	T-STRAINER	TEMP. STRAINER	CLEAN OUT	SAMPLE	STEAM OUT	WATER PURGE
X"	X"			T	CO	S	SO	WP

GENERAL NOTES

1. THIS DRAWING IS GENERAL IN NATURE. SOME SYMBOLS SHOWN HERE MAY NOT BE USED.
2. SEE DRAWING G-002 FOR EQUIPMENT AND PIPE COMMODITY DESIGNATION SYSTEMS.
3. SEE DRAWING G-004 FOR INSTRUMENTATION SYMBOLS.
4. TAG NAMING CONVENTION IS NOT FINALIZED IN THIS REVISION.

PROCESS LINES

- PRIMARY PROCESS FLOW
- SECONDARY PROCESS FLOW
- FUTURE
- VENDOR PACKAGE BOUNDARY
- EXISTING PIPING AND EQUIPMENT
- EXISTING PIPING TO BE REMOVED
- ENCLOSURE BOUNDARY

EQUIPMENT LEGENDS

NEW | EXISTING | DEMOLISHED

PROCESS AND SIGNAL CROSS REFERENCE SYSTEM

1. ON DRAWING W-P2-PID1001 CONTINUATION IS SHOWN AS: 101 W-P2-PID1002
2. ON DRAWING W-P2-PID1002 THIS CONTINUATION IS SHOWN AS: 101 W-P2-PID1001

EXAMPLE

FOR SAMPLE ONLY

RECORD DRAWINGS

REVISIONS DRAWN BY: XX DATE: XX/XX/XX

THESE RECORD DRAWINGS HAVE BEEN PREPARED, IN PART, ON THE BASIS OF INFORMATION COMPILED BY OTHERS. THEY ARE NOT INTENDED TO REPRESENT IN DETAIL THE EXACT LOCATION, TYPE OF COMPONENT NOR MANNER OF CONSTRUCTION. THE ENGINEER WILL NOT BE RESPONSIBLE FOR ANY ERRORS OR OMISSIONS WHICH HAVE BEEN INCORPORATED INTO THE RECORD DRAWINGS.

FOR SEALS AND SIGNATURES

(PROJECT NAME)
GENERAL

PROCESS EQUIPMENT LEGEND AND PIPING SYMBOLS
DESCHUTES COUNTY, OREGON

REVISIONS:

(CONSULTANT ENGINEER NAME, ADDRESS & PHONE NUMBER)

DESIGNED BY:
DRAWN BY:
SCALE:
FILE:
DATE:

VERIFY SCALES
0 1"
BAR EQUALS ONE INCH ON ORIGINAL DRAWING

SHEET:
G-003

COB # (XXXXXX)

FUNCTIONAL IDENTIFICATION

	FIRST LETTER		SUCCEEDING-LETTERS		
	MEASURED OR INITIATING VARIABLE	MODIFIER	READOUT OR PASSIVE FUNCTION	OUTPUT FUNCTION	MODIFIER
A	ANALYSIS		ALARM		
B	BURNER, COMBUSTION			CLOSE-STOP DECREASE	
C	CONDUCTIVITY, pH (ACIDITY)		CLOSE	CONTROL OR CONTROLLER	
D	DENSITY	DIFFERENTIAL		OPEN-START-INCREASE	
E	VOLTAGE		SENSOR (PRIMARY ELEMENT)		
F	FLOW RATE	RATIO (FRACTION)			FAIL
G	GAS		GLASS VIEWING DEVICE		
H	HAND				H-HIGH-(ALARM) HH-HIGH-(SHUTDOWN)
I	CURRENT (ELECTRICAL)		INDICATE		
J	POWER	SCAN			
K	TIME, TIME SCHEDULE	TIME RATE OF CHANGE		CONTROL STATION	
L	LEVEL		LIGHT		L-LOW-(ALARM) LL-LOW-(SHUTDOWN)
M	MOISTURE	MOMENTARY	ON OR OPERATE		MIDDLE, INTERMEDIATE
N			SET POINT		
O	UNCLASSIFIED		OPEN ORIFICE, RESTRICTION POINT (TEST) CONNECTION		OVERLOAD
P	PRESSURE, VACUUM			PNEUMATIC	
Q	QUANTITY	INTEGRATE, TOTALIZE		INTEGRATE OR TOTALIZE	
R	RADIATION		RECORD		
S	SPEED, FREQUENCY, SOLENOID	SAFETY		SWITCH, OR SAFETY	
T	TEMPERATURE			TRANSMIT	
U	MULTIVARIABLE		MULTIFUNCTION	MULTIFUNCTION	
V	VIBRATION, MECHANICAL ANALYSIS			VALVE, DAMPER, LOUVRE	MULTIFUNCTION
W	WEIGHT, FORCE		WELL		
X	ON/OFF	X AXIS	UNCLASSIFIED	UNCLASSIFIED	
Y	EVENT, STATE, PRESENCE	Y AXIS		RELAY, COMPUTE, CONVERT	UNCLASSIFIED
Z	POSITION, DIMENSION	Z AXIS		DRIVER, ACTUATOR, UNCLASSIFIED - FINAL CONTROL ELEMENT	

INSTRUMENT AND FUNCTION SYMBOLS

- XXXX / XXXX — FIELD MOUNTED INSTRUMENT
- XXXX / XXXX — LOCAL PANEL - MOUNTED INSTRUMENT. ACCESSIBLE
- XXXX / XXXX — INSTRUMENT MOUNTED BEHIND LOCAL CONTROL PANEL. NOT READILY ACCESSIBLE
- XXXX / XXXX — INSTRUMENT MOUNTED ON MAIN PANEL. ACCESSIBLE
- XXXX / XXXX — INSTRUMENT MOUNTED BEHIND MAIN PANEL. NOT READILY ACCESSIBLE
- XXXX / XXXX — FIELD MOUNT ANNUNCIATOR POINT
- XXXX / XXXX — MAIN PANEL MOUNT ANNUNCIATOR POINT
- XXXX / XXXX — LOCAL PANEL MOUNT ANNUNCIATOR POINT
- XXXX / XXXX — SPECIAL PURPOSE DIGITAL DEVICE FOR PROCESSING MAINLY ANALOG INFORMATION. EG. SLDC (SINGLE LOOP DIGITAL CONTROLLER)
- XXXX / XXXX — ANALOG INPUT
- XXXX / XXXX — ANALOG OUTPUT
- XXXX / XXXX — DISCRETE INPUT
- XXXX / XXXX — DISCRETE OUTPUT
- GENERALIZED FOR COMPLEX INTERLOCK LOGIC PERFORMED IN SOFTWARE. SEE SPECIFICATIONS FOR DETAILS.
- XXXX / XXXX — SPECIAL PURPOSE DIGITAL DEVICE FOR PROCESSING MAINLY ANALOG INFORMATION. ACCESSIBLE
- XXXX / XXXX — CONTROL SYSTEM DIGITAL INPUT/OUTPUT
- XXXX / XXXX — COMPUTER - INTERNAL SYSTEM FUNCTION (i.e. COMPUTATION/SIGNAL CONDITIONING)
- XXXX / XXXX — COMPUTER - INTERNAL SYSTEM FUNCTION NORMALLY ACCESSIBLE TO OPERATOR
- XXX-XXXX — EQUIPMENT TAG
- PROPOSED NEW INSTRUMENT
- PROPOSED REMOVAL

PRIMARY ELEMENT SYMBOLS

- ORIFICE PLATE
- VENTURI OR FLOW TUBE
- FLUME
- WEIR
- F1 — VARIABLE AREA FLOW INDICATOR (ROTAMETER)
- FT — FLOW ELEMENT INTEGRAL WITH TRANSMITTER (MASS FLOW, ETC)
- DIAPHRAGM SEAL
- IN-LINE PRESSURE SENSOR
- VORTEX FLOW SENSOR
- $ — IN-LINE CAPACITANCE FLOW ELEMENT
- M — MAGNETIC FLOWMETER
- SONIC FLOWMETER (DOPPLER OR TRANSIT TIME)
- POSITIVE DISPLACEMENT METER
- T — THERMAL MASS FLOW ELEMENT
- ANNUBAR
- PITOT TUBE
- PROPELLER OR TURBINE METER
- C — CORIOLIS MASS FLOWMETER
- TILT FLOAT SWITCH
- FLOAT SWITCH
- DISPLACEMENT LEVEL ELEMENT
- LE — ULTRASONIC/MICROWAVE LEVEL ELEMENT
- LE — RADIO FREQUENCY LEVEL ELEMENT
- LE — SUBMERSIBLE LIQUID LEVEL ELEMENT
- TE — THERMAL SENSING RTD STRIP

TYPICAL INSTRUMENT IDENTIFICATION

FIELD TAG IDENTIFICATION

EXAMPLE WRF-001-PDSHH-001-1010-A1

- SUFFIX
- LOOP NUMBER
- WATER RECLAMATION PLANT SPECIFIC
- EQUIPMENT ACRONYM OR ISA (FUNCTIONAL IDENTIFICATION)
- FACILITY IDENTIFIER
- CITY DEPARTMENT IDENTIFIER

SCHEMATIC IDENTIFICATION

- PROCESS FUNCTION CODE *
- FUNCTIONAL IDENTIFICATION CODE
- OPERATING FUNCTION *
- BASIC INSTRUMENT
- PANEL LOCATION *
- PROCESS IDENTIFIER

OUTPUT, 71, PDIT, 123A, 1:1, LP2, INPUT

* OPTIONAL

CITY DEPARTMENT IDENTIFIER - (3 CHARACTER)

1. C - COLLECTIONS OPERATIONS
2. W - WATER OPERATIONS
3. D - DRAINAGE OPERATIONS
4. WRF - WATER RECLAMATION PLANT

FACILITY IDENTIFIER - (UP TO 4 CHARACTER)

1. XXXX - COLLECTION PUMP STATIONS
2. XXXX - WATER RESERVOIR
3. XXXX - STORM SEWER STATIONS
4. XXXX - PRESSURE (XXX)

EQUIPMENT ACRONYM OR ISA - (UP TO 5 CHARACTER)

SEE DWG WPRV015-G002 FOR DETAILS

WATER RECLAMATION PLANT SPECIFIC - (4 CHARACTERS)

LOOP NUMBER - (4 NUMERALS)

SUFFIX - (UP TO 2 CHARACTERS)

USED ONLY WHEN 2 OR MORE INSTRUMENTS ARE IN THE LOOP

INSTRUMENT OPERATING FUNCTIONS

ANALYTICAL FUNCTIONS

RES Cl_2	RESIDUAL CHLORINE
SO_2	SULFUR DIOXIDE
COMB	COMBUSTIBLE GAS
H_2S	HYDROGEN SULFIDE
pH	pH
DO	DISSOLVED OXYGEN
O_2	OXYGEN
VIB	VIBRATION
CO	CONDUCTIVITY

SWITCHING FUNCTIONS

3W	THREE-WAY SWITCH
EH	EMERGENCY HIGH (24VDC BACKED)
MS	MOTOR-RATED SWITCH
HA	HAND-AUTO SELECTION
HOA	HAND-OFF-AUTO SELECTION
JOA	JOG-OFF-AUTO SELECTION
S/S	START-STOP
L/L	LEAD-LAG SELECTION
LLCO	LOW LEVEL CUT OFF
F/S	FAST-SLOW SELECTION
OCA	OPEN-CLOSE-AUTO SELECTION
OSC	OPEN-STOP-CLOSE SELECTION
SEL	SELECTOR SWITCH
O/O	ON-OFF SELECTION
M/A	MANUAL-AUTO SELECTION
L/R	LOCAL-REMOTE SELECTION
ESD	EMERGENCY SHUTDOWN
ACK	ACKNOWLEDGE (ALARM)
D/P	DIFFERENTIAL PRESSURE
I/P	CURRENT TO PRESSURE
IBD	INBOARD BEARING
OBD	OUTBOARD BEARING
RSP	REMOTE SET POINT
RST	RESET

INSTRUMENT SIGNAL SYMBOLS

- INSTRUMENT SUPPLY, PROCESS TAPS
- PNEUMATIC SIGNAL
- ELECTRIC SIGNAL DISCRETE, 120VAC
- ELECTRIC SIGNAL DISCRETE, 24VDC
- ELECTRIC SIGNAL ANALOG
- CAPILLARY TUBE OR FILLED SYSTEM
- ELECTROMAGNETIC OR SONIC SIGNAL (GUIDED)
- ELECTROMAGNETIC OR SONIC SIGNAL (UNGUIDED)
- SOFTWARE AND DATA LINK IN CONTROL SYSTEM
- MECHANICAL LINK
- HYDRAULIC

LINE DESIGNATIONS

- ES — ELECTRIC POWER SUPPLY 120 VAC 60 HZ (UNLESS OTHERWISE NOTED)
- SA — SERVICE AIR SUPPLY
- IA — INSTRUMENT QUALITY AIR SUPPLY
- C2 — WATER SUPPLY C1, C2, C3, ETC.

MISCELLANEOUS SYMBOLS

- I — INTERLOCK - SEE CONTROL STRATEGY DESCRIPTION
- R — RESET FOR LATCH-TYPE OPERATOR
- ANNUNCIATIOR HORN
- GROUND
- INSTRUMENT LOOP SHIELD GROUND
- BOND

GENERAL NOTES

1. THIS DRAWING IS GENERAL IN NATURE. SOME SYMBOLS SHOWN HERE MAY NOT BE USED.
2. REFER TO DRAWING G-002 AND G-003 FOR EQUIPMENT AND PIPE COMMODITY DESIGNATIONS.
3. TAG NAMING CONVENTION IS NOT FINALIZED IN THIS REVISION.

FOR SAMPLE ONLY

RECORD DRAWINGS

REVISIONS DRAWN BY: XX DATE: XX/XX/XX

THESE RECORD DRAWINGS HAVE BEEN PREPARED, IN PART, ON THE BASIS OF INFORMATION COMPILED BY OTHERS. THEY ARE NOT INTENDED TO REPRESENT IN DETAIL THE EXACT LOCATION, TYPE OF COMPONENT NOR MANNER OF CONSTRUCTION. THE ENGINEER WILL NOT BE RESPONSIBLE FOR ANY ERRORS OR OMISSIONS WHICH HAVE BEEN INCORPORATED INTO THE RECORD DRAWINGS.

EXAMPLE

FOR SEALS AND SIGNATURES

(PROJECT NAME)
GENERAL

INSTRUMENTATION LEGEND AND SYMBOLS

DESCHUTES COUNTY, OREGON

REVISIONS:

(CONSULTANT ENGINEER NAME, ADDRESS & PHONE NUMBER)

DESIGNED BY:
DRAWN BY:
SCALE:
FILE:
DATE:

VERIFY SCALES
0 — 1"
BAR EQUALS ONE INCH ON ORIGINAL DRAWING

SHEET:
G-004

COB # (XXXXXX)

CIRCUITS AND RACEWAYS

MCC1000/HS1010-C — RACEWAY IDENTIFIER

RACEWAY EXPOSED

RACEWAY CONCEALED

RACEWAY TURNED TOWARD THE THE VIEWER.

RACEWAY TURNED DOWN

CONDUIT PLUGGED FLUSH

CONDUIT CAPPED

DUCT BANK, NON-REINFORCED CONCRETE

DUCT BANK, REINFORCED CONCRETE

HH23 / X — MANHOLE (MH) OR HANDHOLE (HH), X = CABLE TYPE (SEE CABLE IDENTIFICATION SYSTEM)

JB2700A / J — JUNCTION BOX. OPTIONAL IDENTIFIER.

TB1035 / TB — TERMINAL BOX. OPTIONAL IDENTIFIER.

PBD-A-1,3,5 — HOME RUN - SEE PANELBOARD, SWITCHBOARD, OR MCC SCHEDULE FOR CIRCUIT INFORMATION.

EXAMPLE: HOME TO PANELBOARD PBD-A, CIRCUITS 1, 3, AND 5.

DISTRIBUTION EQUIPMENT

APPROXIMATE SHAPE AND SCALE REPRESENTED WHERE POSSIBLE. HOWEVER, EXACT SIZE AND NUMBER OF SECTIONS IS ESTIMATED.

FLOOR-STANDING DISTRIBUTION ASSEMBLY, SUCH AS A SWITCHBOARD, TRANSFORMER, OR MOTOR CONTROL CENTER

MCC1234 — EQUIPMENT DESIGNATION (EXAMPLE)

WALL-MOUNTED DISTRIBUTION ASSEMBLY, SUCH AS PANELBOARD, MOTOR STARTER PANEL, OR TERMINAL CABINET

PBD1234 120/208V — EQUIPMENT DESIGNATION (EXAMPLE)

120/240V

120/208V

480V

T — TRANSFORMER

GROUNDING

GROUND ROD

GROUND ROD WITH GROUND WELL

GROUND CONNECTION, COMPRESSION OR EXOTHERMIC.

G — GROUNDING CONDUCTOR

LIGHTING

FIXTURE IDENTIFIER:

NUMBER OF FIXTURES (OPTIONAL IDENTIFIER)

FIXTURE TYPE. REFER TO LIGHT SPEC. TYPE APPLIES TO ALL FIXTURES OF THE SAME SHAPE WITHIN A ROOM OR AREA.

5 XX 2/40 R 8'-6"

MOUNTING (OPTIONAL IDENTIFIER):

- L = POLE
- G = GROUND
- P = PENDANT
- R = RECESSED
- S = SURFACE
- W = WALL

MOUNTING HEIGHT, FLOOR TO BOTTOM OF FIXTURE UON. AHAP= AS HIGH AS POSSIBLE.

NUMBER OF LAMPS/LAMP WATTAGE (OPTIONAL IDENTIFIER)

LIGHTING FIXTURE SHAPES AND SCALE ARE REPRESENTED WHERE POSSIBLE. THE EXAMPLES SHOWN BELOW ARE TYPICAL APPLICATIONS.

FLUORESCENT FIXTURE

COMPACT FLUORESCENT OR HID FIXTURE

WALL MOUNTED FIXTURE

DIRECTIONAL LIGHT

POLE MOUNTED AREA LIGHT

EXISTING LIGHT POST

EMERGENCY LIGHTING UNIT. SELF CONTAINED.

EXIT SIGN. DARK QUADRANTS INDICATE FACES ILLUMINATED. DIRECTIONAL ARROWS INDICATED.

3a — CIRCUIT IDENTIFIER: WHEN SHOWN ADJACENT TO FIXTURE IDENTIFIES CIRCUIT NUMBER AND SWITCH. EXAMPLE: CIRCUIT 3, CONTROLLED BY SWITCH a.

EXIT AND EMERGENCY UNIT SIGN. DARK QUADRANTS INDICATE FACES ILLUMINATED. DIRECTIONAL ARROWS INDICATED.

WIRING DEVICES

SWITCHES:

UNLESS OTHERWISE NOTED, ALL SWITCHES ARE WALL MOUNTED.

$ — TOGGLE SWITCH, SINGLE POLE, 20 AMP

$ $ — GANGED SWITCHES IN COMMON BOX WITH COMMON WALL PLATE

$a3 — SUPERSCRIPT INDICATES CIRCUIT CONTROLLED: a, b, c, ETC. MAY BE COMBINED WITH CIRCUIT NUMBER. EXAMPLE: 1a, 4b, ETC.

SUBSCRIPT MODIFIER INDICATES:

- 2 = DOUBLE POLE
- 3 = THREE WAY
- 4 = FOUR WAY
- D = DIMMER
- K = KEY OPERATED
- MC = MOMENTARY CONTACT, THREE POSITION
- MS = MANUAL (MOTOR) STARTER OR SWITCH
- R = RHEOSTAT (DIMMER, SPEED CONTROL)

RECEPTACLES:

UNLESS OTHERWISE NOTED, ALL RECEPTACLES ARE 120 VOLT, SINGLE PHASE, STRAIGHT BLADE, NON-LOCKING, GROUNDING STYLE.

DUPLEX RECEPTACLE, 20 AMP, 3 WIRE

RECEPTACLE MODIFIERS:

- C = CLOCK HANGER
- WP = WEATHER PROOF
- GFCI = GROUND FAULT CIRCUIT INTERRUPTER
- H = HAZARDOUS AREA-EXPLOSION PROOF

EXPLOSION PROOF, CLASS 1, 20A DEAD FRONT, 45° ANGLE, TWO GANG

RECESSED FLOOR RECEPTACLE-- ANY RECEPTACLE INSIDE A SQUARE.

SURFACE FLOOR RECEPTACLE-- ANY RECEPTACLE INSIDE A TRIANGLE.

DOUBLE DUPLEX RECEPTACLES--IN COMMON BOX, WITH COMMON WALL PLATE.

X — SPECIAL RECEPTACLE-- X = NEMA DESIGNATOR, EXAMPLE: L22-20R

TELEPHONE & COMMUNICATION SYSTEMS

UNLESS OTHERWISE NOTED, TELEPHONE OUTLETS SHALL BE MOUNTED AT SAME HEIGHT AS THE RECEPTACLES. VERIFY.

(OPTIONAL SUPERSCRIPT)

+48"AFF — EXTERNAL LINE OR PLANT PHONE SYSTEM OUTLET

MODIFIERS:

- A = ATTENDANT'S CONSOLE
- F = FUTURE INSTRUMENT
- J = JACK, PLUG-IN TYPE
- W = WALL INSTRUMENT

BELL

TV CAMERA

SPEAKER

DATA

MOTORS AND EQUIPMENT

MOTOR STARTER, INDIVIDUAL. NOT LOCATED IN AN MCC OR SIMILAR GROUP ASSEMBLY

COMBINATION MOTOR STARTER. NOT LOCATED IN AN MCC OR SIMILAR GROUP ASSEMBLY

DISCONNECT SWITCH, NON-FUSED

F — DISCONNECT SWITCH, FUSED

M — MOTOR

H — HEATER

T — THERMOSTAT

WH — WATER HEATER

FIELD INSTRUMENT

CONTROL STATION. SEE CONTROL DIAGRAMS FOR DEVICES REQUIRED

P 1234 — EQUIPMENT OR INSTRUMENTATION DESIGNATION (EXAMPLE)

CABLE IDENTIFICATION SYSTEM

1. LABEL CABLES WITH "ORIGIN/DESTINATION" AS PREFIX AND CABLE TYPE AS SUFFIX (e.g. MCC1000/HS1010-C). SEE EXPLANATION BELOW:

MCC1000 / HS 1 010 A1 – C

- ORIGIN
- DESTINATION
- CABLE TYPE

ORIGIN / DESTINATION

MOTOR EQUIPMENT OR INSTRUMENTATION EQUIPMENT IDENTIFICATION.

CABLE TYPE – (1 CHARACTER)

- P POWER
- C CONTROL
- S SIGNAL (FOUNDATION FIELDBUS AND 4-20mA ANALOG I/O
- D DATA (INCLUDES ALL NON-FIBER OPTIC NETWORKS
- F OPTICAL FIBER

GENERAL NOTES

1. ALL ELECTRICAL EQUIPMENT AND MATERIALS SHALL BE APPROVED FOR USE BY THE CITY OF BEND PRIOR TO INSTALLATION. EQUIPMENT DATA SHALL BE SUBMITTED AS DIRECTED BY THE CITY.
2. ALL ELECTRICAL WORK SHALL COMPLY WITH THE APPLICABLE PORTIONS OF THE OREGON ELECTRICAL SPECIALTY CODE (OESC), THE NATIONAL ELECTRIC CODE (NEC), AND LOCAL CODES IN FORCE AT THE TIME OF CONSTRUCTION.
3. ALL ELECTRICAL EQUIPMENT AND MATERIALS SHALL BE APPROVED BY UNDERWRITERS LABORATORIES INC. (UL) FOR THE PURPOSE FOR WHICH THEY ARE USED, AND ALL SHALL BEAR A UL LABEL.
4. ALL ELECTRICAL EQUIPMENT AND RACEWAY SHALL BE SUPPORTED / ANCHORED / BRACED TO MEET ALL IMPOSED GRAVITY, WIND, AND/OR SEISMIC FORCES, IN ACCORDANCE WITH THE REQUIREMENTS OF THE OREGON STRUCTURAL SPECIALTY CODE AND THE INTERNATIONAL BUILDING CODE. WHERE THE DESIGN OF THESE SUPPORT SYSTEMS ARE NOT PROVIDED AS PART OF THESE CONTRACT DOCUMENTS, THE CONTRACTOR SHALL BE RESPONSIBLE FOR THIS DESIGN AND SHALL PROVIDE MANUFACTURER'S DATA OR CALCULATIONS PREPARED BY A STRUCTURAL ENGINEER REGISTERED IN THE STATE OF OREGON VERIFYING COMPLIANCE WITH THESE REQUIREMENTS.
5. ALL EQUIPMENT LOCATIONS AND DIMENSIONS SHALL BE FIELD-VERIFIED AND FINAL LOCATIONS SHALL BE APPROVED BY THE CITY OF BEND PRIOR TO INSTALLATION.
6. CONDUITS SHALL BE INSTALLED WITH A MINIMUM NUMBER OF BENDS, LIMITED TO MEET NEC REQUIREMENTS. CONTRACTOR TO PROVIDE FITTINGS AND BOXES AS REQUIRED TO LIMIT THE NUMBER OF BENDS.
7. CONDUIT RUNS ON DRAWINGS ARE PRESENTED DIAGRAMMATICALLY AND ARE NOT INTENDED TO DEPICT ACTUAL ROUTING. CONTRACTOR TO ROUTE CONDUITS PARALLEL AND PERPENDICULAR TO EQUIPMENT AND STRUCTURES. GROUP MULTIPLE CONDUIT RUNS AND NEATLY RACK AND SUPPORT. COORDINATE RACEWAY LAYOUT WITH MECHANICAL, PIPING, AND STRUCTURAL SYSTEMS. ROUTE SURFACE CONDUITS VERTICALLY, WHERE POSSIBLE, TO ALLOW FOR FUTURE WALL-MOUNTED INSTALLATIONS ON UNUSED SPACE.
8. PROVIDE CLEARLY VISIBLE ARC FLASH LABELING ON NEW ELECTRICAL EQUIPMENT TO COMPLY WITH NEC ARTICLE 110.16, "ELECTRICAL EQUIPMENT, SUCH AS SWITCHBOARDS, PANELBOARDS, INDUSTRIAL CONTROL PANELS, METER SOCKET ENCLOSURES, AND MOTOR CONTROL CENTERS, THAT ARE IN OTHER THAN DWELLING UNITS, AND ARE LIKELY TO REQUIRE EXAMINATION, ADJUSTMENT, SERVICING, OR MAINTENANCE WHILE ENERGIZED SHALL BE FIELD MARKED TO WARN QUALIFIED PERSONS OF POTENTIAL ARC FLASH HAZARDS."
9. ALL CONDUCTORS #6 AND SMALLER SHALL HAVE COLORED INSULATION JACKETS MEETING THE FOLLOWING COLOR CODING. CONDUCTORS #4 AND LARGER SHALL HAVE THE SAME COLOR CODING OR COLORED TAPE AT EACH END TO MATCH THE FOLLOWING COLOR CODES:

	208Y/120V	480Y/277V
A∅ (LEFT BUS IN PANEL)	BLACK	BROWN
B∅ (CENTER BUS IN PANEL)	RED	ORANGE
C∅ (RIGHT BUS IN PANEL)	BLUE	YELLOW
NEUTRAL	WHITE	GRAY
GROUND	GREEN	GREEN

10. CONTRACTOR SHALL BE RESPONSIBLE FOR ROUTING, PROVIDING, AND INSTALLING ALL CONDUITS AND CONDUCTORS REQUIRED TO RESULT IN FULLY FUNCTIONING EQUIPMENT, WHETHER OR NOT SUCH CONDUIT IS SHOWN ON THESE DRAWINGS.
11. CONTRACTOR SHALL BE RESPONSIBLE FOR PROVIDING PROPERLY SIZED STARTER OVERLOADS FOR ALL STARTER EQUIPMENT FURNISHED.

SYMBOL GENERAL NOTES:

1. NEW WORK SHOWN IN BOLD LINE WEIGHT. EXISTING CONDITIONS SHOWN IN LIGHT LINE WEIGHT.
2. THIS DRAWING IS GENERAL IN NATURE. SOME SYMBOLS SHOWN HEREON MAY NOT BE USED ON THE CONTRACT DRAWINGS.
3. SYMBOLS ARE ARRANGED ON SPECIFIC DRAWINGS AND IN CATEGORIES FOR CONVENIENCE ONLY; SYMBOLS MAY BE USED ON ANY OF THE CONTRACT DRAWINGS.
4. IDENTIFICATIONS (ID), SIZES, RATINGS, LOCATIONS AND SIMILAR INFORMATION SHOWN ASSOCIATED WITH SYMBOLS ARE OPTIONAL; EXAMPLES OF SUCH INFORMATION ARE SHOWN WITH SOME SYMBOLS FOR CLARITY.
5. CABLE IDENTIFICATION SYSTEM IS NOT FINALIZED IN THIS REVISION.

FOR SAMPLE ONLY

RECORD DRAWINGS

REVISIONS DRAWN BY: XX DATE: XX/XX/XX

THESE RECORD DRAWINGS HAVE BEEN PREPARED, IN PART, ON THE BASIS OF INFORMATION COMPILED BY OTHERS. THEY ARE NOT INTENDED TO REPRESENT IN DETAIL THE EXACT LOCATION, TYPE OF COMPONENT NOR MANNER OF CONSTRUCTION. THE ENGINEER WILL NOT BE RESPONSIBLE FOR ANY ERRORS OR OMISSIONS WHICH HAVE BEEN INCORPORATED INTO THE RECORD DRAWINGS.

EXAMPLE

FOR SEALS AND SIGNATURES

(PROJECT NAME)
GENERAL

ELECTRICAL NOTES AND STANDARD SYMBOLS

DESCHUTES COUNTY, OREGON

REVISIONS:

(CONSULTANT ENGINEER NAME, ADDRESS & PHONE NUMBER)

DESIGNED BY:
DRAWN BY:
SCALE:
FILE:
DATE:

VERIFY SCALES
0 — 1"
BAR EQUALS ONE INCH ON ORIGINAL DRAWING

SHEET:
G-005

COB # (XXXXXX)

CONTROL DIAGRAM SYMBOLS

GENERAL

- ENCLOSURE BOUNDARY, EXISTING
- ENCLOSURE BOUNDARY, NEW
- CONDUCTORS CONNECTED
- CONDUCTORS NOT CONNECTED
- TERMINAL POINT FOR EXTERNAL CONNECTIONS
- EXISTING EQUIPMENT

DISCONNECTS AND OVERCURRENT DEVICES

MCP — MOTOR CIRCUIT PROTECTOR

CIRCUIT BREAKER, THERMAL– MAGNETIC, 3 POLE, UON.

MODIFIERS:
- /M MAGNETIC ONLY
- /2P POLES, IF OTHER THAN 3

FUSE SIZE — FUSE

MODIFIERS:
- CLF = CURRENT LIMITING FUSE
- DE = DUAL ELEMENT
- F = CLASS F

NEON BLOWN FUSE INDICATOR

SELECTOR SWITCHES

ID 1 2 — 2 POSITION MAINTAINED CONTACT
- (XO) CLOSED IN POSITION 1
- (OX) CLOSED IN POSITION 2

ID 1 2 — 2–POSITION SPRING RETURNED TO RIGHT
- (XO) CLOSED IN POSITION 1
- (OX) CLOSED IN POSITION 2

ID 1 2 3 — 3–POSITION MAINTAINED CONTACT
- (XOO) CLOSED IN POSITION 1
- (OXO) CLOSED IN POSITION 2
- (OOX) CLOSED IN POSITION 3

PUSHBUTTONS

ID LOCATION — PUSH BUTTON, MOMENTARY CONTACT, NORMALLY OPEN

ID LOCATION — PUSH BUTTON, MOMENTARY CONTACT, NORMALLY CLOSED

ID LOCATION — PUSH BUTTON WITH MUSHROOM HEAD, EMERGENCY STOP, MOMENTARY CONTACT

INPUT SWITCHES

LIQUID LEVEL ACTIVATED SWITCH
- OPENS ON RISING LEVEL
- CLOSES ON RISING LEVEL

PRESSURE OR VACUUM ACTIVATED SWITCH
- OPENS ON RISING PRESSURE
- CLOSES ON RISING PRESSURE

TEMPERATURE ACTIVATED SWITCH
- OPENS ON RISING TEMPERATURE
- CLOSES ON RISING TEMPERATURE

FLOW ACTIVATED SWITCH
- OPENS ON INCREASE IN FLOW
- CLOSES ON INCREASE IN FLOW

LIMIIT SWITCH DIRECTLY ACTIVATED, SPRING RETURN
- NORMALLY OPEN
- NORMALLY OPEN – HELD CLOSED
- NORMALLY CLOSED
- NORMALLY CLOSED – HELD OPEN

FOOT OPERATED SWITCH
- OPENS BY FOOT PRESSURE
- CLOSES BY FOOT PRESSURE

TIME DELAY SWITCH
- NORMALLY OPEN CONTACT CLOSES AFTER TIME DELAY WHEN COIL IS ENERGIZED, OPENS INSTANTANEOUSLY WHEN DE–ENERGIZED
- NORMALLY CLOSED CONTACT OPENS AFTER TIME DELAY WHEN COIL IS ENERGIZED, CLOSES INSTANTANEOUSLY WHEN DE–ENERGIZED
- NORMALLY OPEN CONTACT CLOSES INSTANTANEOUSLY WHEN COIL IS ENERGIZED, OPENS AFTER TIME DELAY WHEN DE–ENERGIZED
- NORMALLY CLOSED CONTACT OPENS INSTANTANEOUSLY WHEN COIL IS ENERGIZED, CLOSES AFTER TIME–DELAY WHEN DE–ENERGIZED

CONTROL RELAYS

CR 2 FUNCTION — OPERATING COIL
- CR = CONTROL RELAY
- U = UNLATCH
- L = LATCH

OL — THERMAL OVERLOAD RELAY

CR2 (LINE) CR2 (LINE) — OUTPUT CONTACTS. LINE NUMBER OF RELAY COIL SHOWN (OPTIONAL)

TIMING RELAYS

TR 3 — OPERATING COIL

ON or OFF DELAY
RANGE:SEC/MIN
SET:SEC/MIN

NORMALLY OPEN	NORMALLY CLOSED	
TR3 (LINE) OR TC	TR3 (LINE) OR TO	DELAY ON COIL ENERGIZATION (ON DELAY)
TR3 (LINE) OR TO	TR3 (LINE) OR TC	DELAY ON COIL DE–ENERGIZATION (OFF DELAY)

CONTACTORS

ID C — OPERATING COILS
- C = CONTACTOR, LIGHTING OR GENERAL USE
- F = FAST OR FORWARD
- M = MAIN OR LINE
- 1M = FIRST MAIN OR WYE
- 2M = SECOND MAIN OR DELTA
- R = RUN OR REVERSE
- S = SLOW OR START

ID SIZE — MAIN CONTACTS

OUTPUT LOADS AND DEVICES

- M — MOTOR
- SPACE HEATER. WATTAGE SHOWN
- MAGNETIC COIL
- SV — SOLENOID
- ETM — HOUR METER (ELAPSED TIME)
- KIC — TIME CONTROLLER

INDICATING LIGHTS

INDICATING LIGHTS

L = LENS COLOR:
- A = AMBER
- B = BLUE
- G = GREEN
- R = RED
- W = WHITE

L LINE — PUSH TO TEST. TEST VOLTAGE TERMINAL SHOWN

TRANSFORMERS

480V / 120V — CONTROL TRANSFORMER. PRIMARY AND SECONDARY VOLTAGES SHOWN. SIZE AS SHOWN OR SPECIFIED.

50:5 — CURRENT TRANSFORMER. PRIMARY/ SECONDARY TURNS RATIO SHOWN. ■ INDICATED POLARITY

MISCELLANEOUS

- HORN
- 250 OHM RES — RESISTOR
- R — RESISTOR, 250 OHMS, ±0.1%, 1/2 WATT PRECISION
- RECTIFIER
- SURGE OR ARC SUPPRESSOR
- TRIAC
- KVAR — CAPACITOR
- CONNECTOR PLUG
- GROUND CONNECTION
- POTENTIOMETER
- BUS DUCT
- BATTERY
- SHIELDED CABLE (OR)
- AC TERMINAL BLOCK
- DC TERMINAL BLOCK

ONE LINE DIAGRAM SYMBOLS

- POTHEAD
- STRESS CONE
- INCOMING LINE
- INDICATES THAT ALL OR PART OF CONDUIT MAY BE ROUTED IN DUCT BANK OR UNDERGROUND.
- SIGNAL
- PORTABLE CABLE
- BUS CONDUCTOR
- CABLE CONDUCTOR
- SURGE PROTECTOR
- LIGHTNING ARRESTOR AND GROUND
- TEST DEVICE
- SW — METERING SWITCH
- A 0–1000 AMPS — METERS:
  - A = AMPERES
  - F = FREQUENCY
  - KW = KILOWATTS, DEMAND
  - PF = POWER FACTOR
  - V = VOLTS
  - VA = VOLT–AMPERES
  - VAR = VOLTAMPERES REACTIVE
  - WH = WATTHOURS
- XS — METER SWITCH
  - AS = AMMETER SWITCH
  - VS = VOLTMETER SWITCH
- RECEPTACLE/PLUG CONNECTION/BUS CONNECTION
- 5 — MOTOR, HORSEPOWER SHOWN
- 5 — HEATER, 5KW SIZE SHOWN
- 200A — DISCONNECT OR ISOLATING SWITCH. 200 AMP SHOWN

100F — FUSE. 100 AMP CLASS "F" SHOWN

100 KVA 13.2 KV / 5.75% Z 480/277 V — POWER TRANSFORMER. VOLTAGES, SIZE, IMPEDANCE SHOWN

1.5 KVA 120 V / 2.5% Z 240/120 V — ISOLATION TRANSFORMER. VOLTAGES, SIZE, IMPEDANCE SHOWN

4.16 KV 3 / 120 V — POTENTIAL TRANSFORMER. PT QUANTITY (3), VOLTAGES, WYE–DELTA CONFIGURATION SHOWN

400:5 3 — CURRENT TRANSFORMER. CT QUANTITY (3) AND 400:5 TURNS RATIO SHOWN. WINDING CONFIGURATIONS:

- DELTA
- WYE (GROUNDED)

600KW 60HZ — 480V 3ø, 4W PF 0.8 — GENERATOR. POWER RATING, FREQUENCY, VOLTAGE, POWER FACTOR, GROUNDED WYE WINDING SHOWN.

GDR 50 AMP/ 10 SEC — NEUTRAL GROUNDING RESISTOR. AMPS/TIME RATING SHOWN

- K — KIRK KEY INTERLOCK
- CIRCUIT BREAKER

MAIN CONTACTS

- M — AIR BREAK CONTACTOR
- M — VACUUM BREAK CONTACTOR

SYMBOL GENERAL NOTES:

1. THIS DRAWING IS GENERAL IN NATURE. SOME SYMBOLS SHOWN HEREON MAY NOT BE USED ON THE CONTRACT DRAWINGS.
2. SYMBOLS ARE ARRANGED ON SPECIFIC DRAWINGS AND IN CATEGORIES FOR CONVENIENCE ONLY; SYMBOLS MAY BE USED ON ANY OF THE CONTRACT DRAWINGS.
3. IDENTIFICATIONS (ID), SIZES, RATINGS, LOCATIONS AND SIMILAR INFORMATION SHOWN ASSOCIATED WITH SYMBOLS ARE OPTIONAL; EXAMPLES OF SUCH INFORMATION ARE SHOWN WITH SOME SYMBOLS FOR CLARITY.

FOR SAMPLE ONLY

RECORD DRAWINGS

REVISIONS DRAWN BY: XX DATE: XX/XX/XX

THESE RECORD DRAWINGS HAVE BEEN PREPARED, IN PART, ON THE BASIS OF INFORMATION COMPILED BY OTHERS. THEY ARE NOT INTENDED TO REPRESENT IN DETAIL THE EXACT LOCATION, TYPE OF COMPONENT NOR MANNER OF CONSTRUCTION. THE ENGINEER WILL NOT BE RESPONSIBLE FOR ANY ERRORS OR OMISSIONS WHICH HAVE BEEN INCORPORATED INTO THE RECORD DRAWINGS.

EXAMPLE

FOR SEALS AND SIGNATURES

(PROJECT NAME)
GENERAL

ELECTRICAL NOTES AND STANDARD SYMBOLS

DESCHUTES COUNTY, OREGON

REVISIONS:

(CONSULTANT ENGINEER NAME, ADDRESS & PHONE NUMBER)

DESIGNED BY:
DRAWN BY:
SCALE:
FILE:
DATE:

VERIFY SCALES
0 — 1"
BAR EQUALS ONE INCH ON ORIGINAL DRAWING

SHEET:
G-006

COB # (XXXXXX)

GENERAL STRUCTURAL NOTES (GSN)

GENERAL

G1. SCOPE
THE NOTES ON THIS SHEET AND THE STANDARD STRUCTURAL DETAILS ARE GENERAL AND APPLY TO THE ENTIRE PROJECT WHETHER SPECIFICALLY CALLED OUT OR NOT, EXCEPT WHERE THERE ARE SPECIFIC INDICATIONS TO THE CONTRARY ON STRUCTURAL SHEETS. IF THERE ARE QUESTIONS, THEY SHALL BE SUBMITTED TO THE STRUCTURAL ENGINEER AND ANSWERED IN WRITING PRIOR TO CONSTRUCTION.

G2. APPLICABLE SPECIFICATIONS AND CODES
A. INTERNATIONAL BUILDING CODE, IBC 2012 WITH APPLICABLE EDITIONS OF THE CODE REFERENCED STANDARDS.
B. LOCAL JURISDICTION AMENDMENTS

G3. DESIGN CRITERIA
1. APPLIES TO ALL STRUCTURES (UNO)

A. DEAD LOAD:	
1. ACTUAL TRIBUTARY STRUCTURE WEIGHT	
2. SUPERIMPOSED DEAD LOAD:	X PSF
B. LIVE LOAD:	
1. ROOF:	XX PSF (NOT REDUCIBLE)
C. SNOW LOAD:	
1. GROUND SNOW LOAD:	XX PSF
2. FLAT ROOF SNOW LOAD:	XX PSF
3. EXPOSURE FACTOR C_e:	X.X
4. IMPORTANCE FACTOR I_s:	X.X
5. THERMAL FACTOR C_t:	X.X
D. SEISMIC:	
1. RISK CATEGORY:	X
2. IMPORTANCE FACTOR:	X
3. SPECTRAL RESPONSE ACCELERATION, S_S:	X.XXX
4. SPECTRAL RESPONSE ACCELERATION, S_1:	X.XXX
5. SITE CLASS:	X
6. SEISMIC DESIGN CATEGORY:	X
7. SPECTRAL RESPONSE COEFFICIENT, S_{DS}:	X.XX
8. SPECTRAL RESPONSE COEFFICIENT, S_{D1}:	X.XXX
9. BASIC SEISMIC FORCE RESISTING SYSTEM:	STEEL ORDINARY CANTILEVER COLUMN
10. ANALYSIS PROCEDURE:	EQUIVALENT LATERAL FORCE
11. RESPONSE MODIFICATION FACTOR R:	X.XX
12. SEISMIC RESPONSE COEFFICIENT C_S:	X.XXX
13. DESIGN BASE SHEAR V:	XX.XXXX
E. WIND:	
1. BASIC WIND SPEED:	XXX MPH
2. EXPOSURE:	C
3. ENCLOSURE:	OPEN

G4. GEOTECHNICAL DATA IS ASSUMED:
ALLOWABLE [NET] SOIL BEARING: XXXX PSF

G5. SAFETY
SAFETY AND STRUCTURE STABILITY DURING CONSTRUCTION ARE THE SOLE RESPONSIBILITY OF THE CONTRACTOR. STRUCTURES HAVE BEEN DESIGNED TO RESIST THE DESIGN LIVE LOADS ONLY AS A COMPLETED STRUCTURE.

G6. OPENINGS
OPENINGS FOR PIPES, DUCTS, CONDUITS, ETC. ARE NOT ALL SHOWN ON THE STRUCTURAL DRAWINGS. COORDINATE AND PROVIDE OPENINGS AS REQUIRED TO ACCOMMODATE ALL WORK SHOWN OR SPECIFIED IN THE CONTRACT DOCUMENTS AND OTHERWISE REQUIRED FOR THE FURNISHING OF A FUNCTIONALLY COMPLETE PROJECT. REINFORCE AROUND OPENINGS PER STANDARD STRUCTURAL DETAILS UNLESS OTHERWISE SHOWN.

G7. SPECIAL INSPECTIONS
SPECIAL INSPECTIONS ARE REQUIRED IN ACCORDANCE WITH CHAPTER 1 AND CHAPTER 17 OF THE IBC. PAYMENT FOR THESE INSPECTIONS IS NOT THE RESPONSIBILITY OF THE CONTRACTOR. THE CONTRACTOR SHALL PROVIDE FOR FULL ACCESS TO THE WORK BY THE SPECIAL INSPECTOR AND SHALL PROVIDE FOR THESE INSPECTIONS IN HIS CONSTRUCTION SCHEDULE IN ACCORDANCE WITH THE SPECIFICATIONS.

G8. STANDARD DETAILS:
THE STANDARD DETAILS DEPICT TYPICAL DETAILING TO BE USED ON THIS PROJECT. IF CONDITIONS ARE NOT EXPLICITLY SHOWN ON THE DRAWINGS THEY SHALL BE MADE SIMILAR TO THE STANDARD DETAILS. OBTAIN APPROVAL OF ENGINEER IN WRITING FOR SIMILAR CONDITIONS PRIOR TO CONSTRUCTION.

G9. EXISTING CONSTRUCTION:
THE CONTACTOR SHALL FIELD VERIFY ALL DIMENSIONS AND ELEVATIONS OF EXISTING CONSTRUCTION AS REQUIRED TO COORDINATE NEW CONSTRUCTION. SUBMIT REQUIRED CHANGES FOR APPROVAL.

G10. EQUIPMENT LOADING:
CONTRACTOR TO SUBMIT FOR REVIEW ALL EQUIPMENT SIZES, OPERATING WEIGHTS, VIBRATION FORCES, SUPPORT LOCATIONS, ALONG WITH ANY FLOOR OPENINGS, NOTCHES, AND RECESSES REQUIRED BY SUCH EQUIPMENT. CONCRETE SUPPORT PADS AND/OR FRAMING REQUIRED TO SUPPORT SAID EQUIPMENT SHALL NOT BE FABRICATED AND PLACED UNTIL THE CONCRETE SUPPORT PADS AND/OR FRAMING IS APPROVED TO SUPPORT THE EQUIPMENT.

CONCRETE

C1. DESIGN STRENGTHS:
F'c = 4500 PSI
Fy = 60,000 PSI

C2. CONCRETE COVER
UNLESS OTHERWISE NOTED, PROVIDE CONCRETE COVER FOR REINFORCING AS FOLLOWS:
CONCRETE DEPOSITED AGAINST EARTH: 3"
ALL OTHER: 2"
SEE DRAWINGS FOR EXCEPTIONS

C3. SEE SPECIFICATIONS FOR REINFORCING PLACEMENT REQUIREMENTS.

C4. REFER TO OTHER DISCIPLINE DRAWINGS PRIOR TO CONSTRUCTION FOR EMBEDDED ITEMS AND PENETRATIONS NOT SHOWN ON STRUCTURAL DRAWINGS.. AS REQUIRED TO ACCOMMODATE ALL WORK SHOWN OR SPECIFIED IN THE CONTRACT DOCUMENTS AND OTHERWISE REQUIRED FOR THE FURNISHING OF A FUNCTIONALLY COMPLETE PROJECT. REINFORCE AROUND OPENINGS PER STANDARD STRUCTURAL DETAILS UNLESS OTHERWISE SHOWN.

CONCRETE (continued)

C5. PROVIDE 3/4" CHAMFERS AT ALL EXPOSED EDGES NOT ALL CHAMFERS MAY BE SHOWN ON DRAWINGS.

C6. FIELD ADJUST REINFORCING AT OPENINGS AND EMBEDDED ITEMS AS INDICATED.

C7. ANCHOR BOLTS NOT SPECIFIED BY ENGINEER SHALL BE DESIGNED AND CERTIFIED BY A REGISTERED PROFESSIONAL ENGINEER, RETAINED BY THE CONTRACTOR, IN ACCORDANCE WITH APPLICABLE PROJECT AND CODE REQUIREMENTS. SUBMIT AS A SHOP DRAWING FOR REVIEW AND APPROVAL BY THE ENGINEER. COORDINATE LOCATION, SIZE AND EMBEDMENT PRIOR TO CASTING CONCRETE.

C8. ABSOLUTELY NO WELDING OF REINFORCING BARS OR TORCHING TO BEND REINFORCING BARS SHALL BE ALLOWED WITHOUT SPECIFIC APPROVAL FROM THE STRUCTURAL ENGINEER.

C9. ALL CAST IN PLACE AND POST-INSTALLED ANCHORS INDICATED IN THE STRUCTURAL DOCUMENTS SHALL COMPLY WITH APPENDIX D OF ACI 318 AND CHAPTER 19 OF THE IBC. ALL EXPANSION AND ADHESIVE ANCHORS SHALL HAVE THE ICC REPORT SHOWING EQUIVALENT LOAD CAPACITY. SUBMIT AND INSTALL PER THE ICC EVALUATION REPORT.

STEEL

S1. DESIGN STRENGTHS:
HSS SECTIONS: Fy=46 KSI
ALL OTHER PLATES AND SHAPES: Fy=36 KSI

S2. DIMENSIONS:
TO CENTERLINES OF COLUMNS AND BEAMS, TOP SURFACES OF BEAMS AND TUBES AND BACKS OF CHANNELS AND ANGLES UNO.

S3. ELEVATIONS:
TOP OF STEEL REFERS TO TOP SURFACE OF MEMBER OR FLANGE UNO.

S4. FILLET WELDS:
WHEN FILLET WELD SIZE IS NOT INDICATED, PROVIDE MAXIMUM WELD SIZE BASED ON MATERIAL THICKNESS IN ACCORDANCE WITH AISC SPECIFICATIONS.

S5. BOLTED CONNECTIONS:
ALL BOLTED STRUCTURAL CONNECTIONS ARE BEARING TYPE CONNECTIONS UNLESS OTHERWISE SPECIFIED TO BE SLIP-CRITICAL. PROVIDE LOAD INDICATING WASHERS AT SLIP-CRITICAL CONNECTIONS.

S6. STEEL MANUAL:
CONFORM TO AISC 360, STEEL CONSTRUCTION MANUAL AND AISC 341, SEISMIC DESIGN MANUAL.

STEEL DECK:

SD1. THE DESIGN, FABRICATION, AND ERECTION OF METAL DECKING SHALL BE IN ACCORDANCE WITH THE CURRENT EDITION OF THE SDI SPECIFICATIONS AND THE SDI DIAPHRAGM MANUAL

SD2. STEEL ROOF DECK IS 1-1/2 INCH X 18 GAUGE DESIGNED FOR THE DEAD, SNOW AND LIVE LOADS INDICATED.

SD3. STEEL ROOF DECK IS TO BE A STRUCTURAL DIAPHRAGM AND SHALL BE CONNECTED TO THE STRUCTURE AS INDICATED IN THE METAL DECK SCHEDULE.

SD4. THE PLANS INDICATE DECK SPAN DIRECTION.

SD5. SUSPENDED CEILINGS, LIGHT FIXTURES, DUCTS, AND OTHER UTILITIES SHALL NOT BE SUPPORTED FROM THE STEEL DECK.

FINISHES:

F1. _____COLOR OF ROOF.

F2. _____COLOR OF SUPPORT STEEL.

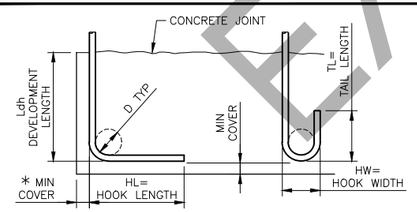

BAR SIZE GRADE 60	HL	HW	TL	D	f'c=4.0 OR 4.5 KSI Ldh *
#3	6"	3"	3"	2 1/4"	6"
#4	8"	4"	4 1/2"	3"	7"
#5	10"	5"	5"	3 3/4"	9"
#6	1'-0"	6"	6"	4 1/2"	10"
#7	1'-2"	7"	7"	5 1/4"	12"
#8	1'-4"	8"	8"	6"	14"
#9	1'-7"	11 3/4"	10 1/2"	9 1/2"	15"
#10	1'-10"	1'-1 1/4"	11 1/2"	10 3/4"	17"
#11	2'-0"	1'-2 3/4"	1'-1"	12"	19"

* COMPLYING WITH MINIMUM COVER REQUIREMENTS OF ACI 318, 12.5.3. OTHERWISE Ldh MUST BE RE-CALCULATED.

1 REINFORCING HOOK SCHEDULE
1"=1'-0"

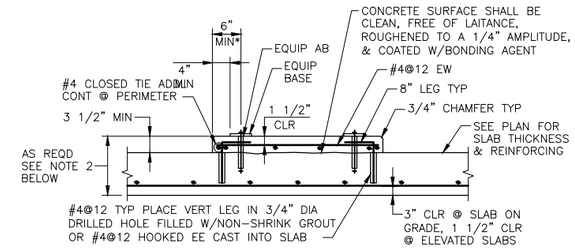

NOTES:

1. PROVIDE ABOVE PAD UNDER ALL STATIC, NON-VIBRATING ELECTRICAL AND MECHANICAL EQUIPMENT SUPPORTED ON STRUCTURAL SLABS. ALSO PROVIDE FOR EQUIPMENT WEIGHING LESS THAN 5000 POUNDS WHICH ARE SUPPORTED ON GRADE OR WHERE SPECIFICALLY NOTED ON PLANS. STRUCTURAL ENGINEER TO REVIEW AND PROVIDE PROJECT SPECIFIC DESIGN FOR ALL EQUIPMENT PADS.

2. PAD THICKNESS SHALL BE THE LARGER OF SLAB THICKNESS PLUS 3 1/2" OR MINIMUM PAD THICKNESS FROM TABLE. PROVIDE AN ADDITIONAL LAYER OF #4@12 EACH WAY WITH 1 1/2" CLEAR TOP AND BOTTOM FOR EACH 8" ADDITIONAL PAD THICKNESS EXCEEDING THE 3 1/2" MINIMUM THICKNESS. ALTERNATIVELY, THICKEN SLAB ON GRADE BELOW EQUIPMENT PAD AS REQD TO MAINTAIN MIN 3" COVER ON ANCHOR BOLTS.

MINIMUM PAD THICKNESS TABLE	
AB DIA	MIN PAD THK
1/4" DIA	5"
3/8" DIA	6 1/2"
1/2" DIA	8"
5/8" DIA	9 1/2"
3/4" DIA	11"
7/8" DIA	12 1/2"
1" DIA	14"

PAD NOTES:

1. ABOVE PAD DETAILS APPLY FOR SUPPORT OF STATIC, NON-VIBRATING EQUIPMENT UNLESS INDICATED OTHERWISE ON THE DRAWINGS. STRUCTURAL ENGINEER TO REVIEW AND PROVIDE PROJECT SPECIFIC DESIGN FOR EQUIPMENT PADS.

2. BEFORE EQUIPMENT SUPPORT PADS ARE CAST, THE PAD SIZES AND REINFORCING SHALL BE APPROVED BY THE ENGINEER AS BEING CAPABLE OF SUPPORTING EQUIPMENT TO BE PLACED THEREON. EQUIPMENT BASE DIMENSIONS SHALL BE THE LARGER OF AS DETERMINED BY THE EQUIPMENT MANUFACTURER OR AS INDICATED ON THE DRAWINGS. SUBMIT ALL EQUIPMENT DIMENSIONS AND LOADS TO ENGINEER. THE SIZE, NUMBER, TYPE, LOCATION AND THREAD PROJECTION OF THE ANCHOR BOLTS (AB) SHALL BE AS DETERMINED BY THE EQUIPMENT MANUFACTURER AND SHALL BE AS APPROVED BY THE ENGINEER. AB SHALL BE HELD IN POSITION WITH A TEMPLATE WHILE EQUIPMENT PAD IS CAST.

*3. 6" MINIMUM PAD EDGE DIMENSION TO EQUIPMENT AB APPLIES FOR ALL EQUIPMENT SUPPORT PADS.

2 TYPICAL EQUIPMENT SUPPORT PAD
N.T.S.

LAP SPLICE AND EMDEDMENT LENGTHS f'c =4.0 ksi fy = 60 ksi f'c =4.5 ksi		
BAR	BARS SPACED GREATER THAN 4"	BARS SPACED LESS THAN OR EQUAL TO 4"
#3	14"	20"
#4	19"	32"
#5	29"	46"
#6	39"	62"
#7	55"	87"
#8	69"	107"
#9	76"	116"
#10	97"	140"
#11	120"	146"

NOTES:

1. PROVIDE MINIMUM LAP SPLICE LENGTHS AND EMBEDMENTS PER TABLE UNLESS NOTED OTHERWISE. EMBEDMENT LENGTH EQUALS THE LAP SPLICE LENGTH UNLESS OTHERWISE NOTED.

2. BAR SPACING AT LAP SPLICE IS THE MINIMUM CLEAR DISTANCE BETWEEN LAPPED BARS PLUS ONE BAR DIAMETER.

3. ALL SPLICES TO BE CONTACT SPLICES AND WIRED TOGETHER UNLESS OTHERWISE APPROVED BY ENGINEER.

3 CONCRETE REINFORCING LAP AND EMBEDMENT SCHEDULE
N.T.S.

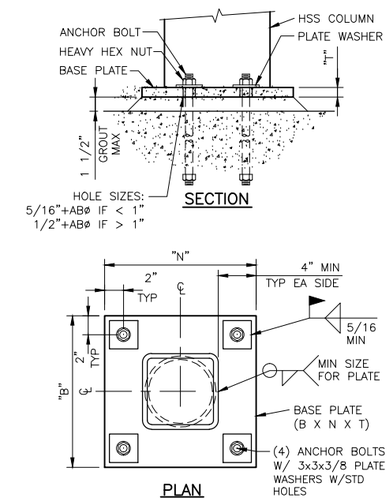

4 COLUMN BASE PLATE
N.T.S.

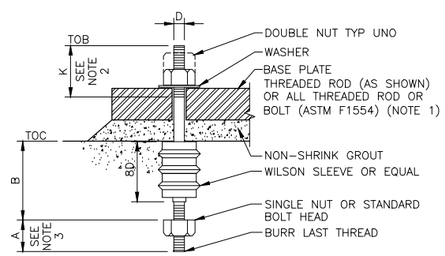

SCHEDULE-ANCHOR BOLT TYPE A				
D	A	B	K	REMARKS
3/8"	1"	6"	2 3/4"	
1/2"	1 1/4"	8"	3"	
5/8"	1 1/2"	10"	3 1/4"	
3/4"	1 3/4"	12"	3 1/2"	
7/8"	2"	14"	3 3/4"	
1"	2 1/4"	16"	4"	
1 1/8"	2 1/2"	18"	4 1/4"	
1 1/4"	2 3/4"	20"	4 1/2"	
1 3/8"	3"	22"	4 3/4"	
1 1/2"	3 1/4"	24"	5"	
1 3/4"	3 3/4"	28"	5 1/2"	
2"	4 1/4"	32"	6"	
2 1/2"	5 1/2"	48"	7"	
3"	6 1/4"	66"	8"	

NOTES:

1. PROVIDE SST ANCHOR BOLTS WHERE INDICATED IN SECTIONS AND DETAILS.

2. STANDARD BOLT THREAD LENGTH MAY BE USED WHERE APPLICABLE.

3. DIMENSION IN SCHEDULE OR STANDARD BOLT HEAD.

5 ANCHOR BOLT DETAIL
N.T.S.

EXAMPLE

FOR SAMPLE ONLY
RECORD DRAWINGS
REVISIONS DRAWN BY: XX DATE: XX/XX/XX
THESE RECORD DRAWINGS HAVE BEEN PREPARED, IN PART, ON THE BASIS OF INFORMATION COMPILED BY OTHERS. THEY ARE NOT INTENDED TO REPRESENT IN DETAIL THE EXACT LOCATION, TYPE OF COMPONENT NOR MANNER OF CONSTRUCTION. THE ENGINEER WILL NOT BE RESPONSIBLE FOR ANY ERRORS OR OMISSIONS WHICH HAVE BEEN INCORPORATED INTO THE RECORD DRAWINGS.

FOR SEALS AND SIGNATURES

(PROJECT NAME)
GENERAL
GENERAL STRUCTURAL NOTES
DESCHUTES COUNTY, OREGON

REVISIONS:

(CONSULTANT ENGINEER NAME, ADDRESS & PHONE NUMBER)

DESIGNED BY:
DRAWN BY:
SCALE:
FILE:
DATE:

VERIFY SCALES
0 1"
BAR EQUALS ONE INCH ON ORIGINAL DRAWING

SHEET:
G-007

COB # (XXXXXX)

WASTEWATER PUMP STATION AND FORCE MAIN DESIGN DATA SUMMARY TABLE 1	
BASIN CHARACTERISTICS	
LOCAITON	ADDRESS AND CROSS STREET
BASIN AREA	XXX ACRES
EQUIVALENT DWELLING UNITS (EDU) PER ACRE	X.X
PERSON PER EDU	X.X
POPULATION EQUIVALENT	XXXX
AVERAGE PER CAPITA FLOW	XX GPD
INFILTRATION AND INFLOW, PEAK WET WEATHER FLOW (PWWF)	XXX,XXX GPD
AVERAGE DAILY FLOW	XXX,XXX GPD
PEAK HOURLY FLOW	XXX GPM
PUMP STATION	
TYPE	DUPLEX SUBMERSIBLE, NON-CLOG, VARIABLE SPEED PUMPS
CAPACITY (PER PUMP)	XXX GPM @ XX FEET TDH (STATIC HEAD = XX FT)
HORSEPOWER, HP	XX HP EACH WITH VARIABLE FREQUENCY DRIVES
MOTOR DATA	Xxx VOLT X PHASE XX CYCLE
FIRM CAPACITY OF PUMP STATION	X.XX MGD (XXX GPM)
MAXIMUM PUMP STARTS PER HOUR	X – SEE NOTE 4
WET WELL VOLUME	XXXX GALLONS (PUMPS OFF TO LEAD PUMP)
LEVEL CONTROL TYPE	PRESSURE SENSORS LEVEL CONTROL
OVERFLOW POINT	MANHOLE NUMBER AND ELEVATION
OVERFLOW LOCATION	DESCRIPTION
AVERAGE TIME TO OVERFLOW	TIME AND DESCRIPTION, XX HOURS AT XX GPM DESIGN AVERAGE INFLUENT FLOW – SEE NOTE 1
TELEMETRY	BY CITY
TRANSFER SWITCH	AUTOMATIC
STANDBY POWER TYPE	XXX kW STATIONARY DIESEL POWERED STANDBY GENERATOR
FUEL TANK CAPACITY	XX HRS/DAYS (XXX GALLONS)
EPA RELIABILITY CLASS	1
FLOW METER	"X" MAGNETIC (DESCRIPTION)
CONTROL	CONSTANT SPEED OR VFD – PER CITY APPROVAL
FORCE MAIN	
TYPE AND LENGTH	XXXX FEET, TYPE
FORCEMAIN VELOCITY	X.X FEET PER SECOND
PROFILE	DESCRIPTION
AIR RELEASE VALVE	QUANTITY, DESCRIPTION
DISCHARGE LOCATION	MANHOLE NUMBER AND ELEVATION
AVERAGE DETENTION TIME	XX HOURS
ODOR CONTROL SYSTEM	DESCRIPTION
OPERATING LEVELS	
GROUND ELEVATION	XXXX.XX
OVERFLOW ALARM ELEVATION	FLOAT CONTROL SYSTEM? (BACKUP)
LAG PUMP ON/HIGH WATER ALARM ELEVATION XXXX.XX	PRESSURE PROBE (PROVIDE DISTANCE FROM WET WELL FLOOR IN FEET) SAME AS LEVEL INDICATOR DIGITAL DISPLAY
LEAD PUMP ON ELEVATION XXXX.XX	PRESSURE PROBE (PROVIDE DISTANCE FROM WET WELL FLOOR IN FEET) SAME AS LEVEL INDICATOR DIGITAL DISPLAY
ALL PUMPS OFF ELEVATION XXXX.XX	PRESSURE PROBE (PROVIDE DISTANCE FROM WET WELL FLOOR IN FEET) SAME AS LEVEL INDICATOR DIGITAL DISPLAY
WETWELL FLOOR ELEVATION XXXX.XX	PRESSURE PROBE (0.00 FEET)
LANDSCAPING	
LANDSCAPING AREA	SQUARE FEET AND DESCRIPTION
IRRIGATION SYSTEM	TYPE
CONTROL VALVES	NUMBER AND TYPE
BACKFLOW DEVICE	SIZE AND TYPE

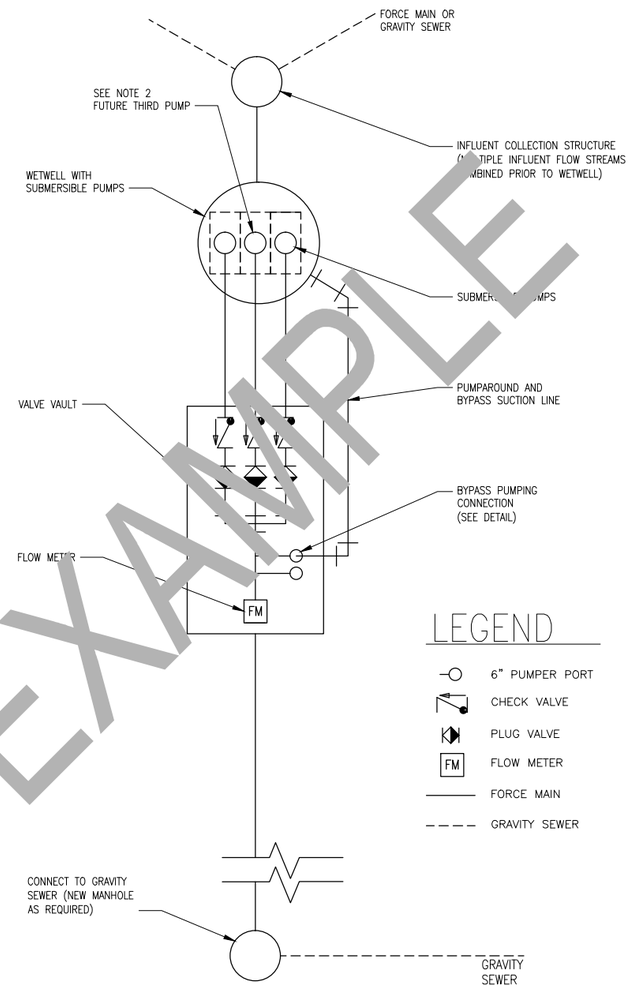

PUMP STATION SCHEMATIC

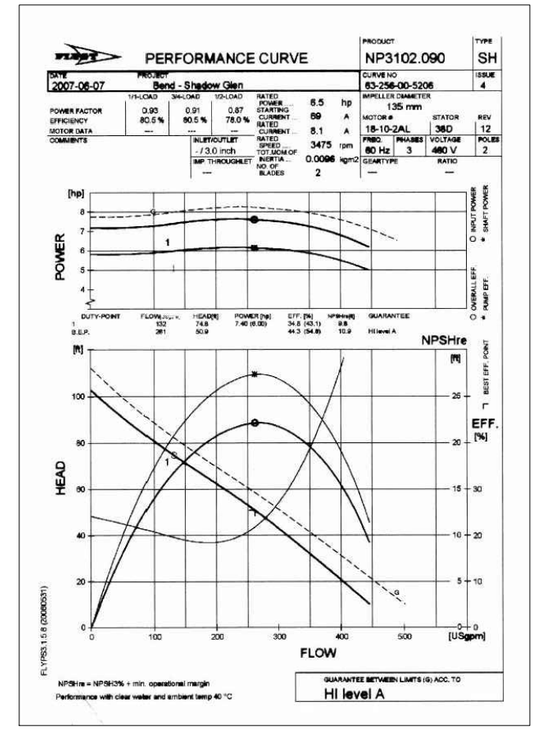

EXAMPLE PUMP PERFORMANCE CURVE

PUMP STATION SCHEMATIC

1. DESIGN ENGINEER TO FILL IN DESIGN INFORMATION IN THE TABLE FOR APPROVAL BY CITY OF BEND. PUMP STATION WETWELL SHALL CONFORM TO ANSI/HYDRAULIC INSTITUTE STANDARD 9.8.
2. RESERVED FOR FUTURE THIRD PUMP IN PUMP STATION.
3. PUMP SELECTION DESIGN POINT SHALL CONFORM TO HYDRAULIC INSTITUTE STANDARDS 9.6.3
4. PUMP STATION WETWELL STORAGE VOLUME PER HYDRAULIC INSTITUTE STANDARD 9.8 BASED ON THE MAXIMUM PUMP CYCLE TIME, LESS THAN EIGHT (8) STARTS PER HOUR.

EXAMPLE

FOR SAMPLE ONLY

RECORD DRAWINGS

REVISIONS DRAWN BY: XX DATE: XX/XX/XX

THESE RECORD DRAWINGS HAVE BEEN PREPARED, IN PART, ON THE BASIS OF INFORMATION COMPILED BY OTHERS. THEY ARE NOT INTENDED TO REPRESENT IN DETAIL THE EXACT LOCATION, TYPE OF COMPONENT NOR MANNER OF CONSTRUCTION. THE ENGINEER WILL NOT BE RESPONSIBLE FOR ANY ERRORS OR OMISSIONS WHICH HAVE BEEN INCORPORATED INTO THE RECORD DRAWINGS.

FOR SEALS AND SIGNATURES

(PROJECT NAME)
GENERAL
BASIS OF DESIGN
DESCHUTES COUNTY, OREGON

REVISIONS:

(CONSULTANT ENGINEER NAME, ADDRESS & PHONE NUMBER)

DESIGNED BY:
DRAWN BY:
SCALE:
FILE:
DATE:

VERIFY SCALES
0 1"
BAR EQUALS ONE INCH ON ORIGINAL DRAWING

SHEET:
G-008

COB # (XXXXXX)

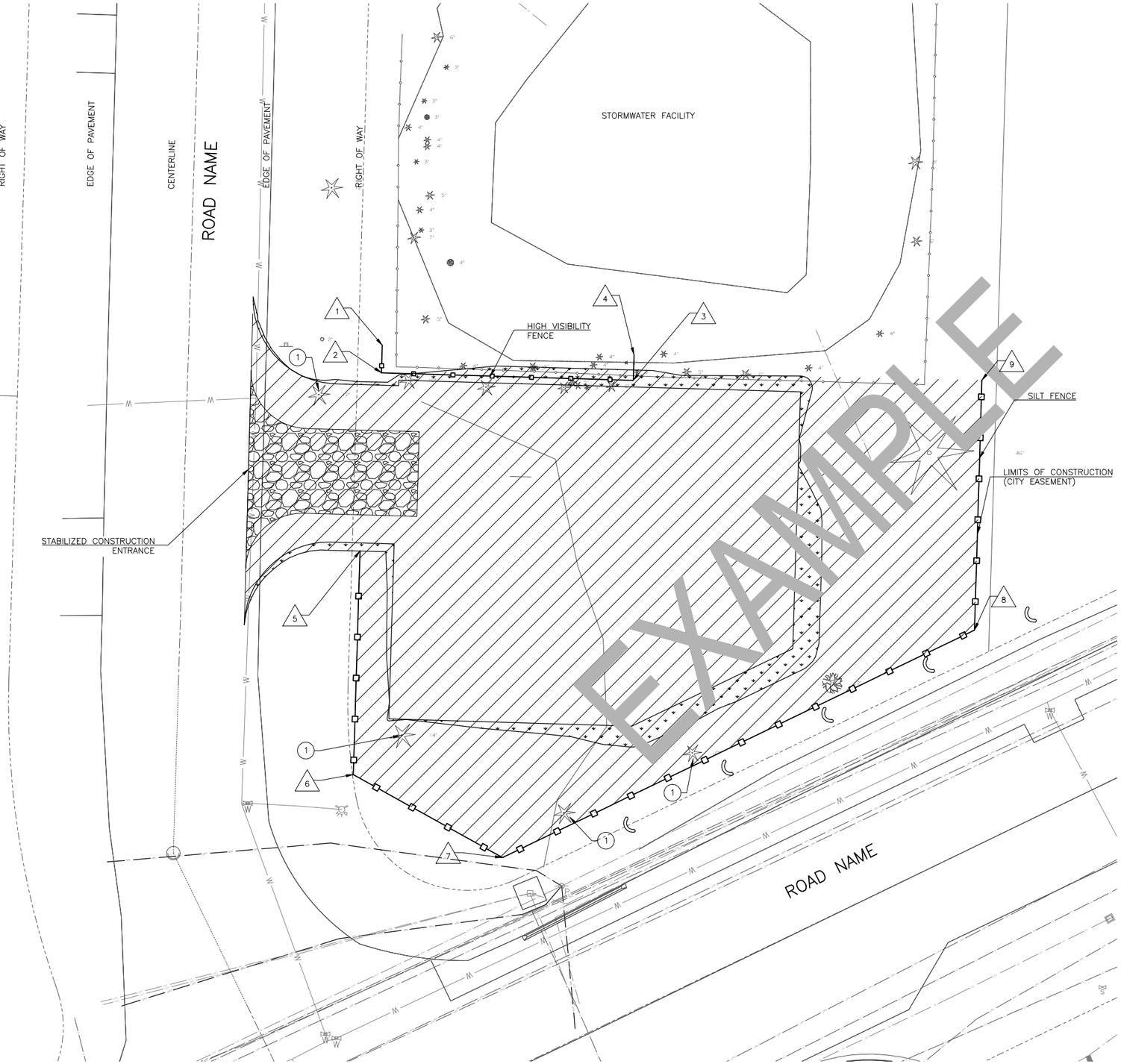

N

10 05 0 10 20

SCALE IN FEET

GENERAL NOTES:

1. HIGH VISIBILITY FENCE SHALL BE INSTALLED AROUND THE DRIP LINES OF TREES TO BE RETAINED ON SITE. FENCING SHALL BE INSTALLED FOLLOWING THE FELLING OF TREES TO BE REMOVED, AND PRIOR TO ANY LARGE EQUIPMENT ENTERING THE PROPERTY.
2. EROSION CONTROL MEASURES SHALL COMPLY WITH CURRENT CITY OF BEND STORM WATER DESIGN MANUAL.

KEY NOTES:

(1) REMOVE EXISTING TREE

POINT TABLE			
#	NORTHING	EASTING	DESCRIPTION
1	633925.41	79082.06	BEGIN HIGH VISIBILITY FENCE

EXAMPLE

FOR SAMPLE ONLY

RECORD DRAWINGS

REVISIONS DRAWN BY: XX DATE: XX/XX/XX

THESE RECORD DRAWINGS HAVE BEEN PREPARED, IN PART, ON THE BASIS OF INFORMATION COMPILED BY OTHERS. THEY ARE NOT INTENDED TO REPRESENT IN DETAIL THE EXACT LOCATION, TYPE OF COMPONENT NOR MANNER OF CONSTRUCTION. THE ENGINEER WILL NOT BE RESPONSIBLE FOR ANY ERRORS OR OMISSIONS WHICH HAVE BEEN INCORPORATED INTO THE RECORD DRAWINGS.

FOR SEALS AND SIGNATURES

(PROJECT NAME) CIVIL

DEMOLITION AND EROSION CONTROL PLAN

DESCHUTES COUNTY, OREGON

REVISIONS:

(CONSULTANT ENGINEER NAME, ADDRESS & PHONE NUMBER)

DESIGNED BY:
DRAWN BY:
SCALE:
FILE:
DATE:

VERIFY SCALES

0 1"

BAR EQUALS ONE INCH ON ORIGINAL DRAWING

SHEET:

C-001

COB # (XXXXXX)

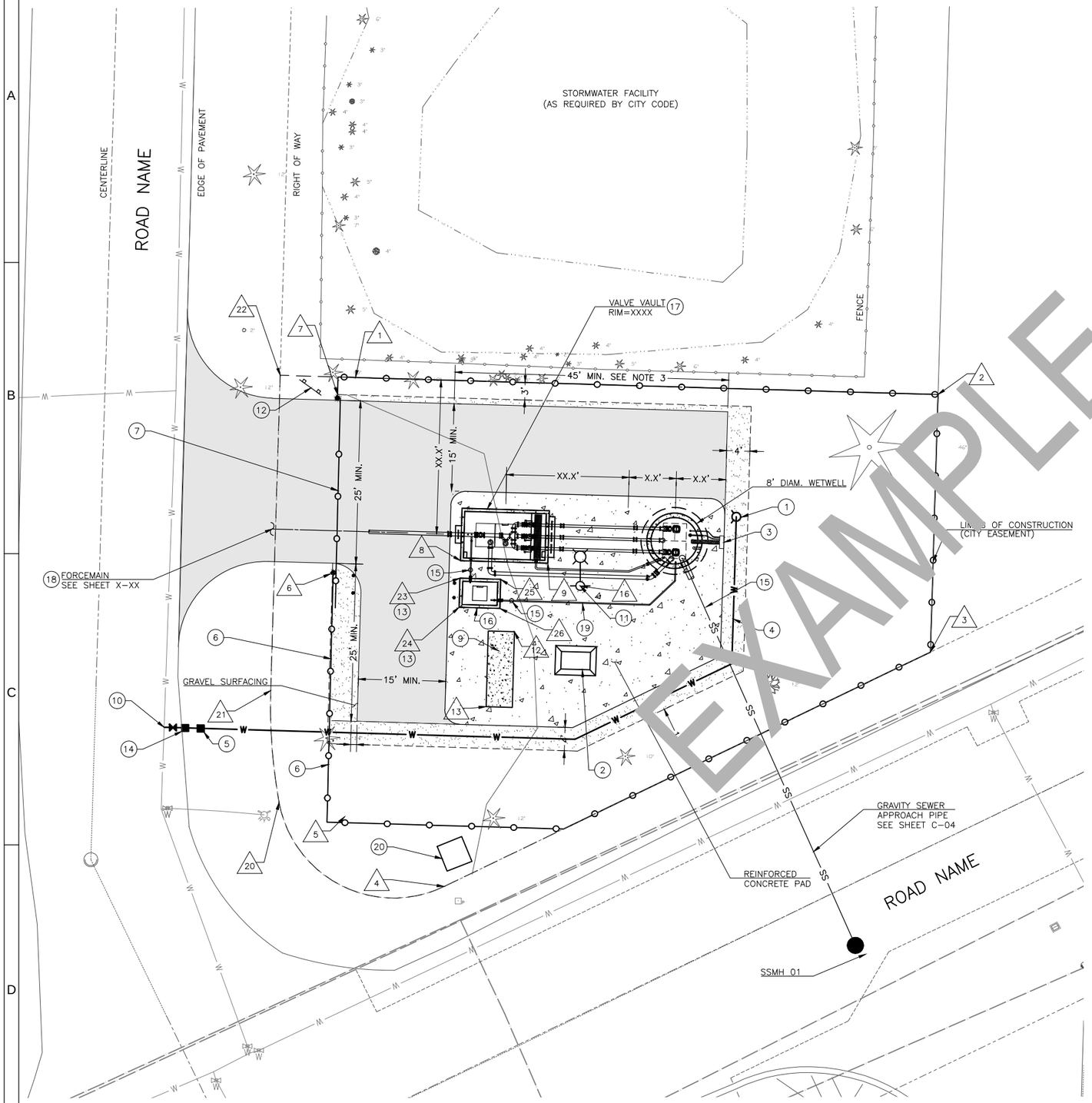

POINT TABLE			
#	NORTHING	EASTING	DESCRIPTION
1	633922.15	79088.07	FENCE
2	633919.22	79188.12	FENCE / EASEMENT AP
3	633875.01	79186.83	FENCE / EASEMENT AP
4	633834.76	79103.32	FENCE / EASEMENT PC
5	633846.73	79086.21	FENCE
6	633888.55	79087.24	FENCE / SLIDE GATE
7	633918.54	79087.98	FENCE / SLIDE GATE
8	633890.69	79106.11	VALVE VAULT
9	633890.25	79121.10	VALVE VAULT
12	633880.50	79115.45	GENERATOR PAD
13	633867.51	79115.0[illegible]	GENERATOR PAD
16	633886.36	79126.67	SITE LIGHTING
20	633849.21	79074.[illegible]	EASEMENT PCC
21	633868.41	790[illegible]	EASEMENT PT
22	633922.5[illegible]	79[illegible]75.14	EASEMENT AP
23	633[illegible]	[illegible]106.19	BOLLARD
24	633885.19	79106.12	BOLLARD
25	633887.5[illegible]	79110.19	ODOR CONTROL STATION
26	6338[illegible].07	79110.11	ODOR CONTROL STATION

N

10 05 0 10 20

SCALE IN FEET

GENERAL NOTES:

1. SEE CITY OF BEND STANDARD DETAIL FOR LIFT STATION AIR AND VACUUM RELEASE.
2. SEE CITY OF BEND STANDARD DETAIL FOR STANDARD VALVE BOX INSTALLATION.
3. DIMENSION SHOWN FOR CITY MAINTENANCE AND TRACTOR TRUCK ACCESS, ANY SITE VARIATION TO ACCESS MUST BE REVIEWED AND APPROVED BY THE CITY UTILITY DEPARTMENT.

KEY NOTES:

1. NON-FREEZE TYPE WASH HYDRANT.
2. CONTROL PANEL PER NFPA 820.
3. ISOLATION PEDESTAL.
4. 2" POLYETHYLENE PIPE CLASS 200.
5. REDUCED PRESSURE BACK FLOW ASSEMBLY.
6. COATED CHAIN LINK FENCE.
7. AUTOMATIC 30' SLIDE GATE, VINYL COATED.
8. NOTE NOT USED
9. GENERATOR ON CONCRETE PAD (PROVIDE STRUCTURAL DESIGN).
10. CONNECT TO EXISTING WATER MAIN.
11. LIFT STATION SITE LIGHT.
12. CITY SIGN, SEE DETAIL (8).
13. BOLLARD TYPE 1.
14. 2" WATER SERVICE WITH 2" BALL VALVE (NO METER).
15. CITY OF BEND VALVE BOX.
16. 6'-0" x 4'-0" CONTAINMENT FOR ODOR CONTROL STATION TO BE COORDINATED AS NEEDED BY CITY OF BEND UTILITY DEPARTMENT.
17. SEE VALVE VAULT DETAILS SHEET M-101.
18. ROUTE TO EXISTING FORCE MAIN.
19. 4" SCHEDULE 80 PVC.
20. POWER VAULT TO BE INSTALLED BY XXX.

EXAMPLE

FOR SAMPLE ONLY

RECORD DRAWINGS

REVISIONS DRAWN BY: XX DATE: XX/XX/XX

THESE RECORD DRAWINGS HAVE BEEN PREPARED, IN PART, ON THE BASIS OF INFORMATION COMPILED BY OTHERS. THEY ARE NOT INTENDED TO REPRESENT IN DETAIL THE EXACT LOCATION, TYPE OF COMPONENT NOR MANNER OF CONSTRUCTION. THE ENGINEER WILL NOT BE RESPONSIBLE FOR ANY ERRORS OR OMISSIONS WHICH HAVE BEEN INCORPORATED INTO THE RECORD DRAWINGS.

FOR SEALS AND SIGNATURES

(PROJECT NAME)
CIVIL

SITE PLAN

DESCHUTES COUNTY, OREGON

REVISIONS:

(CONSULTANT ENGINEER NAME, ADDRESS & PHONE NUMBER)

DESIGNED BY:
DRAWN BY:
SCALE:
FILE:
DATE:

VERIFY SCALES
0 1"
BAR EQUALS ONE INCH ON ORIGINAL DRAWING

SHEET:
C-002

COB # (XXXXXX)

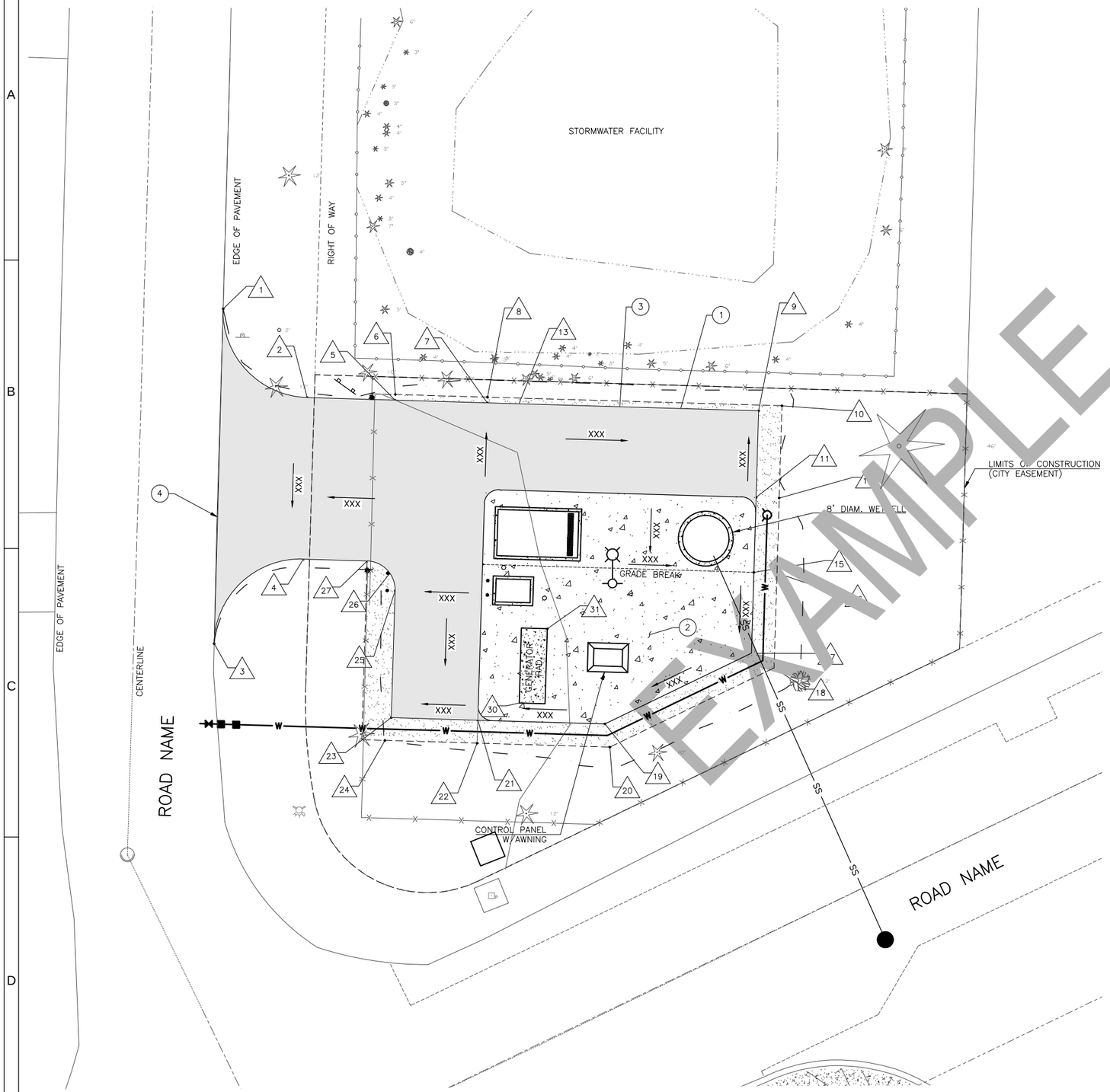

EXAMPLE

N

10 05 0 10 20

SCALE IN FEET

KEY NOTES:

1. COMMERCIAL HMA
2. REINFORCED CONCRETE PAD.
3. GRAVEL SURFACING SECTION.
4. SAWCUT EXISTING ASPHALT CONC. PAVEMENT. TACKCOAT PER ODOT STANDARD.

POINT TABLE

#	NORTHING	EASTING	DESCRIPTION
1	633933.96	79059.23	BEGIN ASPHALT
2	633918.57	79073.79	PT, ASPHALT
3	633875.90	79057.68	END ASPHALT
4	633890.57	79073.11	PC, ASPHALT
5	633918.13	79089.01	BEGIN GRAVEL
6	633919.12	79089.04	AP, GRAVEL
7	633917.65	79104.99	GRADE BREAK, CONCRETE & GRAVEL
8	633918.65	79105.02	GRADE BREAK, GRAVEL
9	633916.28	79152.00	AP, CONCRETE & GRAVEL
10	633917.16	79156.04	AP, GRAVEL
11	633901.28	79151.56	AP, CONCRETE
12	633901.16	79155.56	GRADE BREAK, GRAVEL
13	633902.66	79104.55	AP, CONCRETE
14	633889.67	79104.16	GRADE BREAK, CONCRETE
15	633888.29	79151.18	GRADE BREAK, CONCRETE
16	633888.17	79155.17	GRADE BREAK, GRAVEL
17	633874.27	79150.75	AP, CONCRETE & GRAVEL
18	633871.73	79154.68	AP, GRAVEL
19	633862.03	79125.36	AP, CONCRETE & GRAVEL
20	633858.01	79126.22	AP, GRAVEL
21	633862.68	79103.35	AP, CONCRETE
22	633858.68	79103.23	GRADE BREAK, GRAVEL
23	633863.12	79088.36	AP, CONCRETE & GRAVEL
24	633859.15	79087.24	AP, GRAVEL
25	633885.10	79089.02	PC, ASPHALT & GRAVEL
26	633888.14	79088.11	END GRAVEL
27	633890.25	79084.17	PT, ASPHALT
28	633894.97	79113.74	VALVE VAULT
29	633894.24	79142.88	WETWELL
30	633867.64	79110.57	GENERATOR PAD
31	633880.50	79115.45	GENERATOR PAD

FOR SAMPLE ONLY

RECORD DRAWINGS

REVISIONS DRAWN BY: XX DATE: XX/XX/XX

THESE RECORD DRAWINGS HAVE BEEN PREPARED, IN PART, ON THE BASIS OF INFORMATION COMPILED BY OTHERS. THEY ARE NOT INTENDED TO REPRESENT IN DETAIL THE EXACT LOCATION, TYPE OF COMPONENT NOR MANNER OF CONSTRUCTION. THE ENGINEER WILL NOT BE RESPONSIBLE FOR ANY ERRORS OR OMISSIONS WHICH HAVE BEEN INCORPORATED INTO THE RECORD DRAWINGS.

FOR SEALS AND SIGNATURES

(PROJECT NAME) CIVIL

GRADING AND DRAINAGE PLAN

DESCHUTES COUNTY, OREGON

REVISIONS:

(CONSULTANT ENGINEER NAME, ADDRESS & PHONE NUMBER)

DESIGNED BY:
DRAWN BY:
SCALE:
FILE:
DATE:

VERIFY SCALES

0 1"

BAR EQUALS ONE INCH ON ORIGINAL DRAWING

SHEET:

C-003

COB # (XXXXXX)

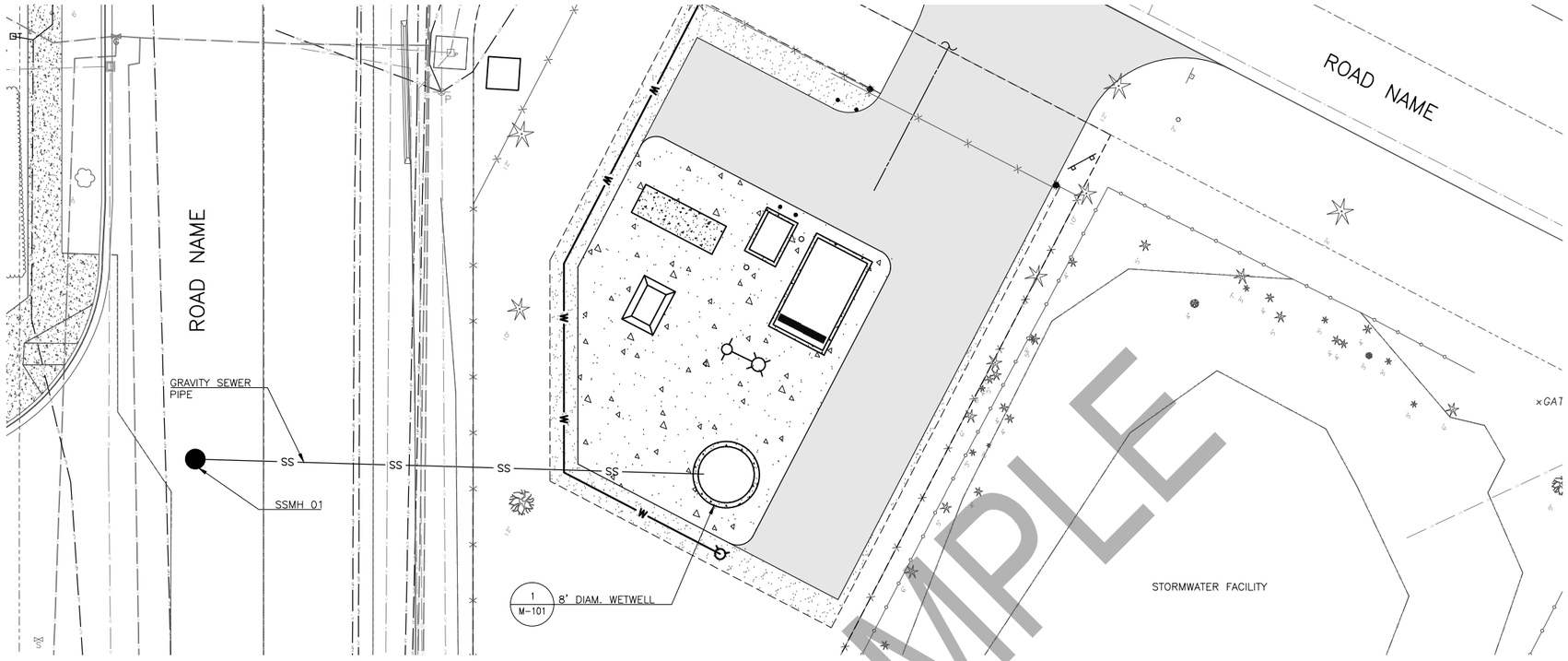

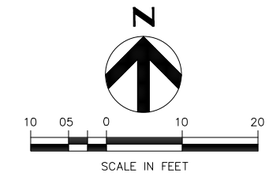

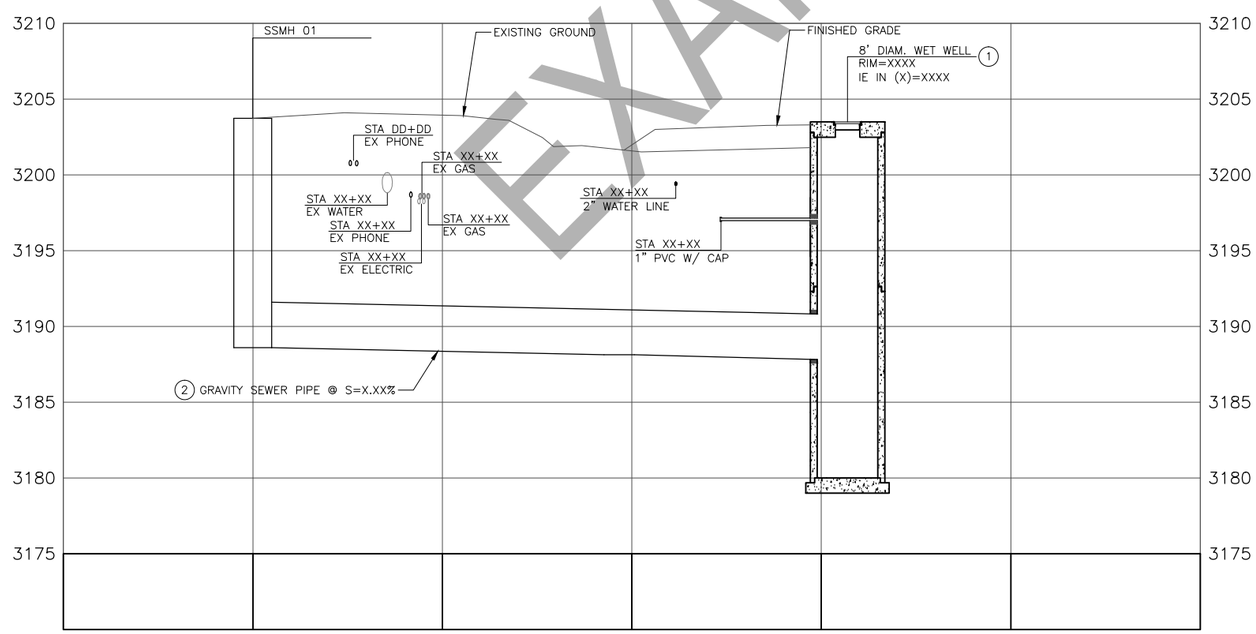

KEY NOTES:

1. RIM ELEVATION TO BE 6" ABOVE FINISH GRADE AND 12" ABOVE 100 YEAR FLOOD ELEVATION.
2. NOTE MAXIMUM SLOPE PER HYDRAULIC INSTITUTE STANDARD 9.8, ARTICLE C.4.2

EXAMPLE

FOR SAMPLE ONLY

RECORD DRAWINGS

REVISIONS DRAWN BY: XX DATE: XX/XX/XX

THESE RECORD DRAWINGS HAVE BEEN PREPARED, IN PART, ON THE BASIS OF INFORMATION COMPILED BY OTHERS. THEY ARE NOT INTENDED TO REPRESENT IN DETAIL THE EXACT LOCATION, TYPE OF COMPONENT NOR MANNER OF CONSTRUCTION. THE ENGINEER WILL NOT BE RESPONSIBLE FOR ANY ERRORS OR OMISSIONS WHICH HAVE BEEN INCORPORATED INTO THE RECORD DRAWINGS.

FOR SEALS AND SIGNATURES

(PROJECT NAME)
CIVIL

GRAVITY SEWER PLAN AND PROFILE

DESCHUTES COUNTY, OREGON

REVISIONS:

(CONSULTANT ENGINEER NAME, ADDRESS & PHONE NUMBER)

DESIGNED BY:
DRAWN BY:
SCALE:
FILE:
DATE:

VERIFY SCALES
0 1"
BAR EQUALS ONE INCH ON ORIGINAL DRAWING

SHEET:
C-004

COB # (XXXXXX)

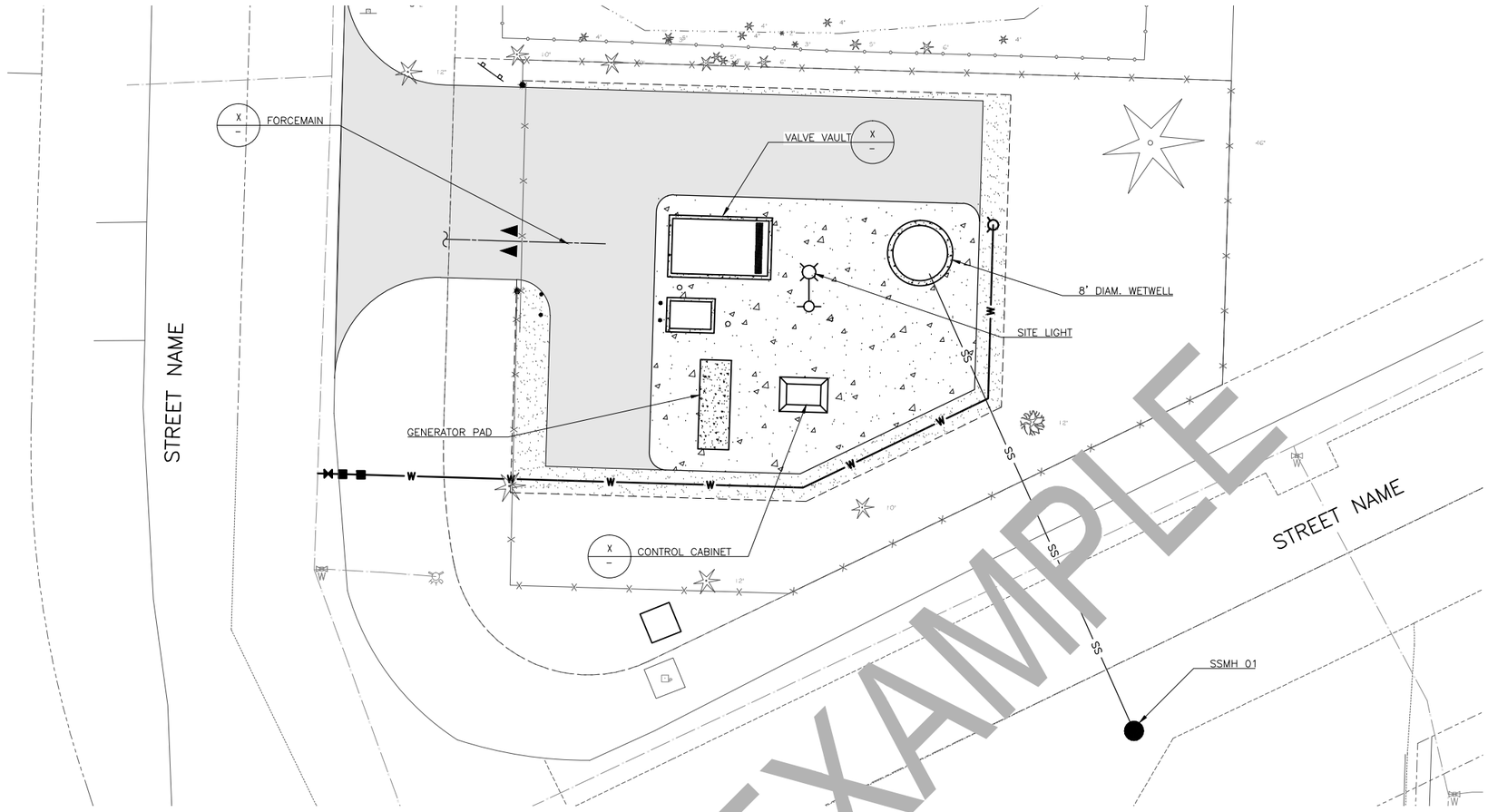

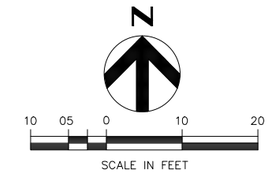

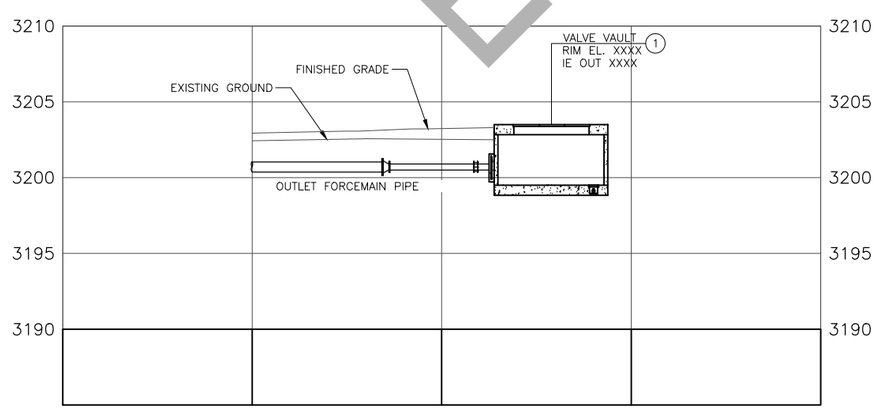

KEY NOTES:

1. RIM ELEVATION TO BE 6" ABOVE FINISH GRADE AND 12" ABOVE 100 YEAR FLOOD ELEVATION.

EXAMPLE

FOR SAMPLE ONLY

RECORD DRAWINGS

REVISIONS DRAWN BY: XX DATE: XX/XX/XX

THESE RECORD DRAWINGS HAVE BEEN PREPARED, IN PART, ON THE BASIS OF INFORMATION COMPILED BY OTHERS. THEY ARE NOT INTENDED TO REPRESENT IN DETAIL THE EXACT LOCATION, TYPE OF COMPONENT NOR MANNER OF CONSTRUCTION. THE ENGINEER WILL NOT BE RESPONSIBLE FOR ANY ERRORS OR OMISSIONS WHICH HAVE BEEN INCORPORATED INTO THE RECORD DRAWINGS.

FOR SEALS AND SIGNATURES

(PROJECT NAME)
CIVIL

FORCE MAIN SEWER PLAN AND PROFILE

DESCHUTES COUNTY, OREGON

REVISIONS:

(CONSULTANT ENGINEER NAME, ADDRESS & PHONE NUMBER)

DESIGNED BY:
DRAWN BY:
SCALE:
FILE:
DATE:

VERIFY SCALES
0 1"
BAR EQUALS ONE INCH ON ORIGINAL DRAWING

SHEET:
C-005

COB # (XXXXXX)

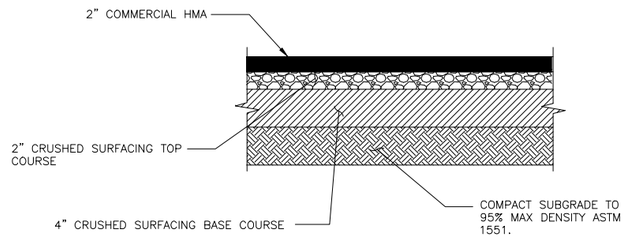

1 ASPHALT PAVEMENT
N.T.S.

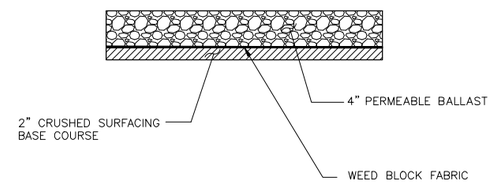

2 GRAVEL SURFACING
N.T.S.

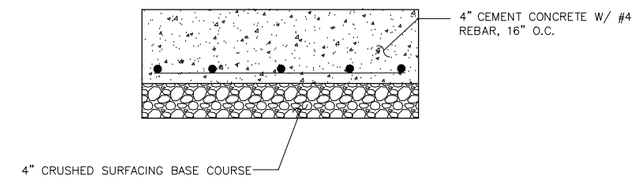

3 REINFORCED CONCRETE PAD
N.T.S.

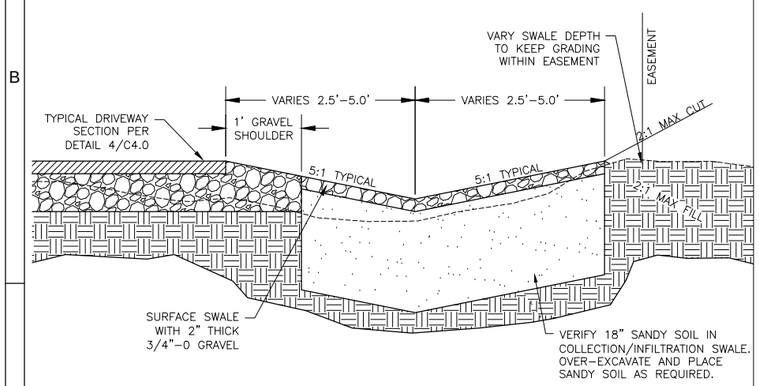

4 DRAINAGE COLLECTION INFILTRATION SWALE SECTION
N.T.S.

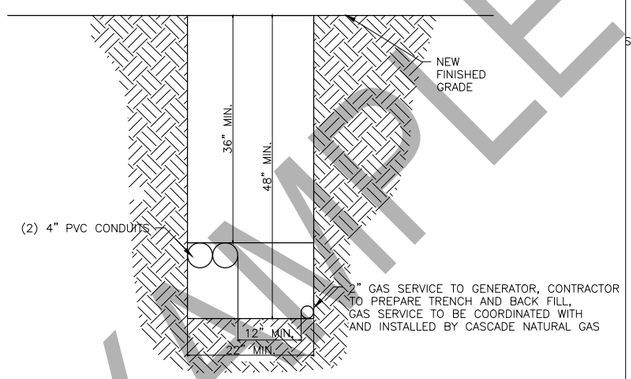

5 PP AND CNG JOINT TRENCH REQUIREMENTS
N.T.S.

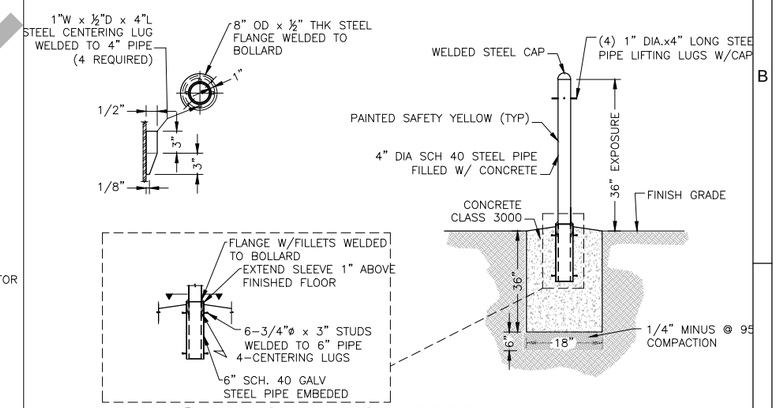

6 REMOVABLE BOLLARD DETAIL
N.T.S.

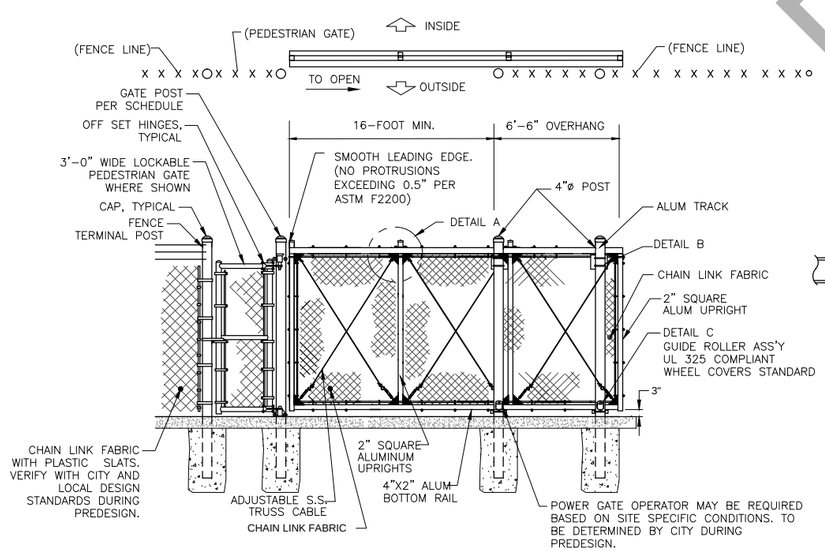

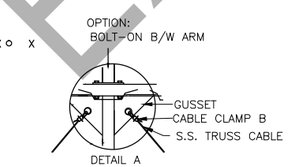

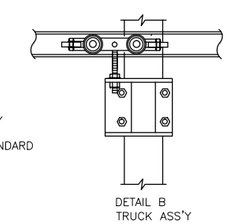

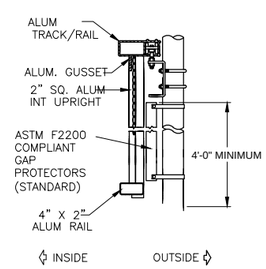

7 CHAIN LINK CANTILEVER SLIDE GATE
N.T.S.

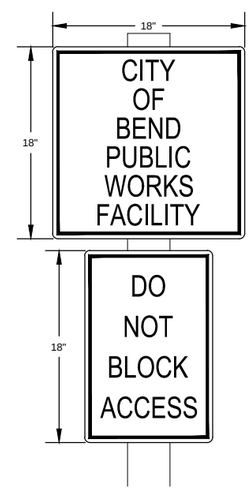

STREET SIGN TO MEET MUTCD STANDARDS.
18"x18"
BLACK LEGEND ON WHITE BACKGROUND
2" LETTERING

STREET SIGN TO MEET MUTCD STANDARDS.
12"x18"
RED LEGEND ON WHITE BACKGROUND
2" LETTERING

8 SIGNING DETAIL
N.T.S.

EXAMPLE

FOR SAMPLE ONLY

RECORD DRAWINGS

REVISIONS DRAWN BY: XX DATE: XX/XX/XX

THESE RECORD DRAWINGS HAVE BEEN PREPARED, IN PART, ON THE BASIS OF INFORMATION COMPILED BY OTHERS. THEY ARE NOT INTENDED TO REPRESENT IN DETAIL THE EXACT LOCATION, TYPE OF COMPONENT NOR MANNER OF CONSTRUCTION. THE ENGINEER WILL NOT BE RESPONSIBLE FOR ANY ERRORS OR OMISSIONS WHICH HAVE BEEN INCORPORATED INTO THE RECORD DRAWINGS.

FOR SEALS AND SIGNATURES

(PROJECT NAME)
CIVIL

CIVIL DETAILS
DESCHUTES COUNTY, OREGON

REVISIONS:

(CONSULTANT ENGINEER NAME, ADDRESS & PHONE NUMBER)

DESIGNED BY:
DRAWN BY:
SCALE:
FILE:
DATE:

VERIFY SCALES
0 1"
BAR EQUALS ONE INCH ON ORIGINAL DRAWING

SHEET:
C-006

COB # (XXXXXX)

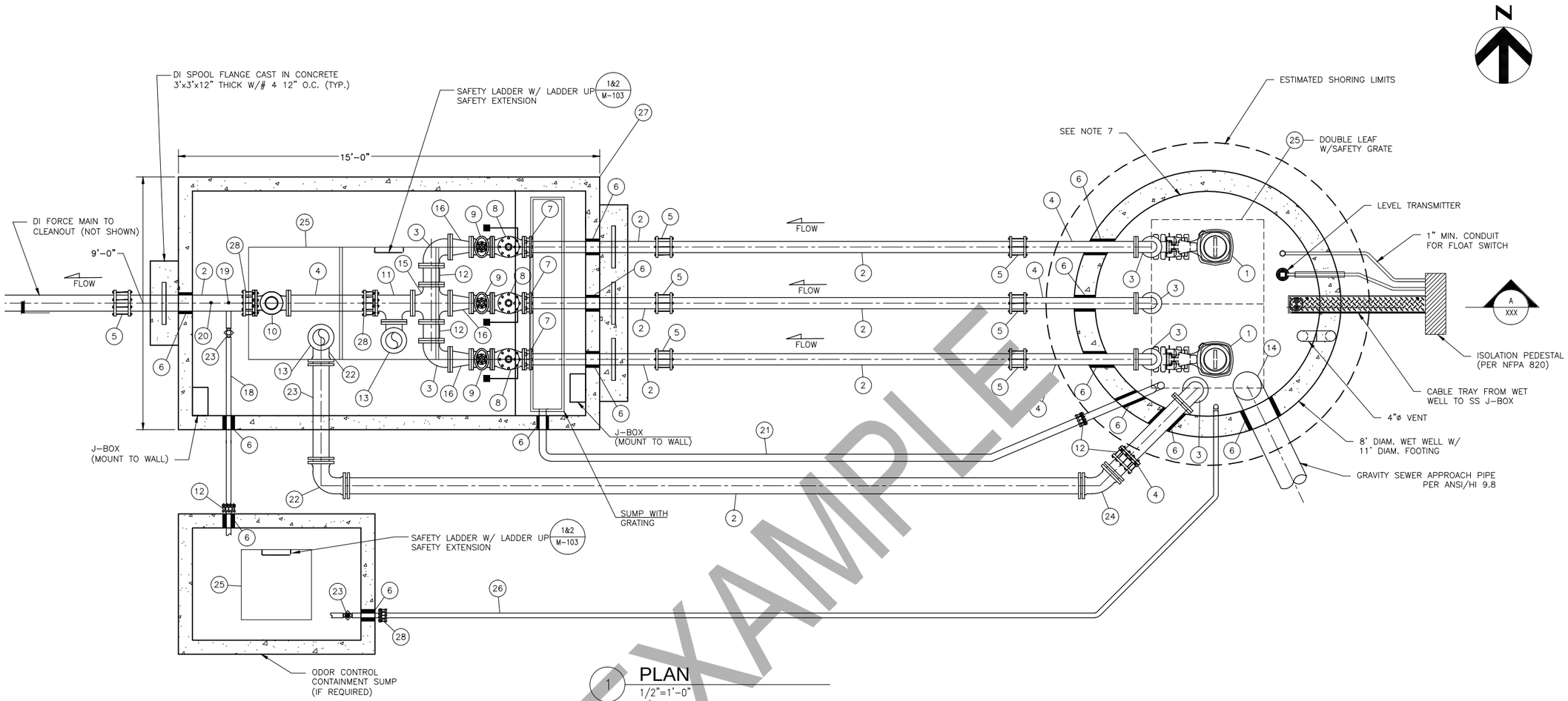

1 PLAN
1/2"=1'-0"

EXAMPLE

KEY NOTES:

1. SUBMERSIBLE PUMPS, NOTE 6
2. DUCTILE IRON, PLAIN END
3. DUCTILE IRON 90° BEND, FL
4. DUCTILE IRON PIPE, FLANGE X PLAIN END
5. FLEXIBLE COUPLING
6. LINK SEAL
7. DISMANTLING JOINT
8. SWING CHECK VALVE W/ SPRING AND LEVER, FLANGED
9. PLUG VALVE, FLANGED
10. FLOW METER, FLANGED
11. TEE, FLANGED
12. PROVIDE FLANGED COUPLING ADAPTER FOR DIFFERENTIAL SETTLEMENT
13. PUMPER PORT WITH ALUMINUM CAM LOCK FITTINGS (2 TYP.) MALE W/ CAP
14. DOWN TURNED TEE
15. CROSS, FLANGED
16. REDUCER, FLANGED
17. NOT USED THIS SHEET
18. PIPE FOR FUTURE ODOR CONTROL CHEMICAL FEED PENETRATION WITH CAP, NOTE 5
19. TAPPING SADDLE WITH 1" BALL VALVE
20. PRESSURE TRANSMITTER ASSEMBLY WITH SADDLE TAP
21. PVC SDR 35 DRAIN LINE
22. 90° BEND, MJ
23. ISOLATION BALL VALVE IN VALVE BOX
24. 45° BEND, MJ
25. ALUMINUM, H20 LOAD RATED ACCESS HATCH
26. 4" DUCTILE IRON DRAIN LINE
27. PRECAST VALVE VAULT, SEE NOTE 1
28. FLANGED COUPLING ADAPTER

GENERAL NOTES:

1. VALVE VAULT SHALL BE PRECAST. (4' MAX DEPTH RIM TO FLOOR)
2. ALL PIPE AND FITTINGS IN WETWELL SHALL BE DUCTILE IRON CLASS 52 WITH FLANGED JOINTS AND EPOXY COATED.
3. ALL PENETRATIONS SHALL BE CORE DRILLED AND SECURED/SEALED WITH LINK SEAL.
4. ALL HARDWARE AND FASTENERS TO BE 316 STAINLESS STEEL.
5. CITY OF BEND RESERVES THE RIGHT TO REQUIRE ODOR CONTROL SECONDARY CONTAINMENT SUMP AND ODOR CONTROL CHEMICAL FEED BASED ON LOCAL SITE REQUIREMENTS.
6. SUBMERSIBLE PUMPS TO BE FLYGT WITH WITH N-IMPELLER OR APPROVED EQUAL. SEE G-008 FOR ADDITIONAL DESIGN DETAIL INFORMATION.
7. PROVIDE THERMOPLASTIC LINER SYSTEM PER CITY STANDARDS SPECIFICATION SECTION 44 42 73.01, PREDL SYSTEMS, OR EQUAL.
8. CONTRACTOR TO INSTALL SST GUIDE RAILS AND PUMP DISCHARGE PIPING FOR FUTURE THIRD PUMP.
9. BYPASS SUCTION END OF PIPE TO BE 2'-0" BELOW GRAVITY APPROACH SEWER INVERT.
10. ALL PIPE AND FITTING SIZES TO BE DETERMINED BASED ON SITE SPECIFIC REQUIREMENTS.

FOR SAMPLE ONLY

RECORD DRAWINGS

REVISIONS DRAWN BY: XX DATE: XX/XX/XX

THESE RECORD DRAWINGS HAVE BEEN PREPARED, IN PART, ON THE BASIS OF INFORMATION COMPILED BY OTHERS. THEY ARE NOT INTENDED TO REPRESENT IN DETAIL THE EXACT LOCATION, TYPE OF COMPONENT NOR MANNER OF CONSTRUCTION. THE ENGINEER WILL NOT BE RESPONSIBLE FOR ANY ERRORS OR OMISSIONS WHICH HAVE BEEN INCORPORATED INTO THE RECORD DRAWINGS.

FOR SEALS AND SIGNATURES

(PROJECT NAME)
MECHANICAL

LIFT STATION MECHANICAL PLAN

DESCHUTES COUNTY, OREGON

REVISIONS:

(CONSULTANT ENGINEER NAME, ADDRESS & PHONE NUMBER)

DESIGNED BY:
DRAWN BY:
SCALE:
FILE:
DATE:

VERIFY SCALES
0 1"
BAR EQUALS ONE INCH ON ORIGINAL DRAWING

SHEET:
M-101

COB # (XXXXXX)

SHEET X OF X

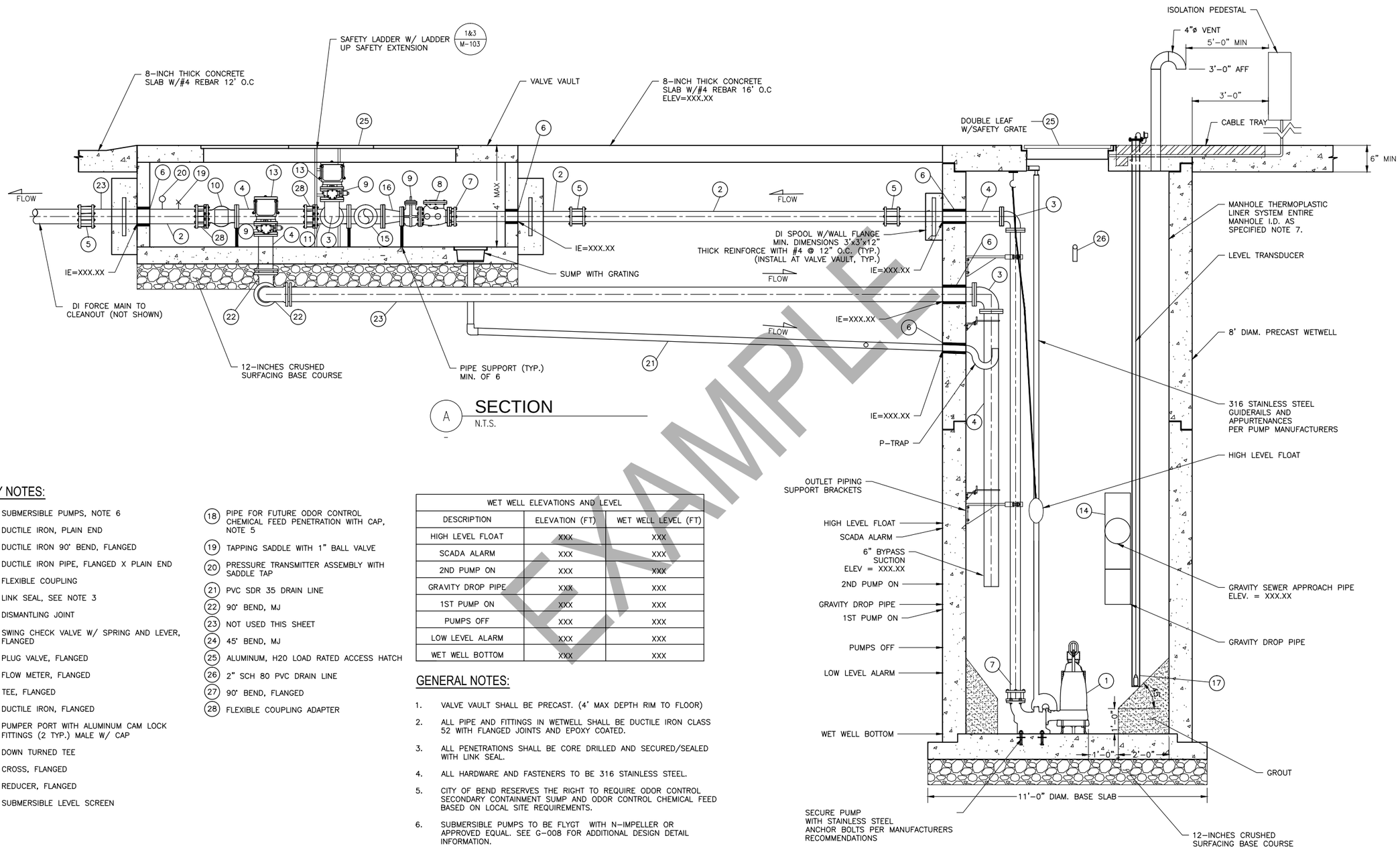

A SECTION
N.T.S.

KEY NOTES:

1. SUBMERSIBLE PUMPS, NOTE 6
2. DUCTILE IRON, PLAIN END
3. DUCTILE IRON 90° BEND, FLANGED
4. DUCTILE IRON PIPE, FLANGED X PLAIN END
5. FLEXIBLE COUPLING
6. LINK SEAL, SEE NOTE 3
7. DISMANTLING JOINT
8. SWING CHECK VALVE W/ SPRING AND LEVER, FLANGED
9. PLUG VALVE, FLANGED
10. FLOW METER, FLANGED
11. TEE, FLANGED
12. DUCTILE IRON, FLANGED
13. PUMPER PORT WITH ALUMINUM CAM LOCK FITTINGS (2 TYP.) MALE W/ CAP
14. DOWN TURNED TEE
15. CROSS, FLANGED
16. REDUCER, FLANGED
17. SUBMERSIBLE LEVEL SCREEN
18. PIPE FOR FUTURE ODOR CONTROL CHEMICAL FEED PENETRATION WITH CAP, NOTE 5
19. TAPPING SADDLE WITH 1" BALL VALVE
20. PRESSURE TRANSMITTER ASSEMBLY WITH SADDLE TAP
21. PVC SDR 35 DRAIN LINE
22. 90° BEND, MJ
23. NOT USED THIS SHEET
24. 45° BEND, MJ
25. ALUMINUM, H20 LOAD RATED ACCESS HATCH
26. 2" SCH 80 PVC DRAIN LINE
27. 90° BEND, FLANGED
28. FLEXIBLE COUPLING ADAPTER

WET WELL ELEVATIONS AND LEVEL		
DESCRIPTION	ELEVATION (FT)	WET WELL LEVEL (FT)
HIGH LEVEL FLOAT	XXX	XXX
SCADA ALARM	XXX	XXX
2ND PUMP ON	XXX	XXX
GRAVITY DROP PIPE	XXX	XXX
1ST PUMP ON	XXX	XXX
PUMPS OFF	XXX	XXX
LOW LEVEL ALARM	XXX	XXX
WET WELL BOTTOM	XXX	XXX

GENERAL NOTES:

1. VALVE VAULT SHALL BE PRECAST. (4' MAX DEPTH RIM TO FLOOR)
2. ALL PIPE AND FITTINGS IN WETWELL SHALL BE DUCTILE IRON CLASS 52 WITH FLANGED JOINTS AND EPOXY COATED.
3. ALL PENETRATIONS SHALL BE CORE DRILLED AND SECURED/SEALED WITH LINK SEAL.
4. ALL HARDWARE AND FASTENERS TO BE 316 STAINLESS STEEL.
5. CITY OF BEND RESERVES THE RIGHT TO REQUIRE ODOR CONTROL SECONDARY CONTAINMENT SUMP AND ODOR CONTROL CHEMICAL FEED BASED ON LOCAL SITE REQUIREMENTS.
6. SUBMERSIBLE PUMPS TO BE FLYGT WITH N-IMPELLER OR APPROVED EQUAL. SEE G-008 FOR ADDITIONAL DESIGN DETAIL INFORMATION.
7. PROVIDE THERMOPLASTIC LINER SYSTEM PER CITY STANDARDS SPECIFICATION SECTION 44 42 73.01, PREDL SYSTEMS, OR EQUAL.
8. CONTRACTOR TO INSTALL SST GUIDE RAILS AND PUMP DISCHARGE PIPING FOR FUTURE THIRD PUMP.
9. BYPASS SUCTION END OF PIPE TO BE 2'-0" BELOW GRAVITY APPROACH SEWER INVERT.
10. ALL PIPE AND FITTING SIZES TO BE DETERMINED BASED ON SITE SPECIFIC REQUIREMENTS.

EXAMPLE

FOR SAMPLE ONLY

RECORD DRAWINGS

REVISIONS DRAWN BY: XX DATE: XX/XX/XX

THESE RECORD DRAWINGS HAVE BEEN PREPARED, IN PART, ON THE BASIS OF INFORMATION COMPILED BY OTHERS. THEY ARE NOT INTENDED TO REPRESENT IN DETAIL THE EXACT LOCATION, TYPE OF COMPONENT NOR MANNER OF CONSTRUCTION. THE ENGINEER WILL NOT BE RESPONSIBLE FOR ANY ERRORS OR OMISSIONS WHICH HAVE BEEN INCORPORATED INTO THE RECORD DRAWINGS.

FOR SEALS AND SIGNATURES

(PROJECT NAME)
MECHANICAL
LIFT STATION MECHANICAL SECTION
DESCHUTES COUNTY, OREGON

REVISIONS:

(CONSULTANT ENGINEER NAME, ADDRESS & PHONE NUMBER)

DESIGNED BY:
DRAWN BY:
SCALE:
FILE:
DATE:

VERIFY SCALES
0 1"
BAR EQUALS ONE INCH ON ORIGINAL DRAWING

SHEET:
M-102

COB # (XXXXXX)

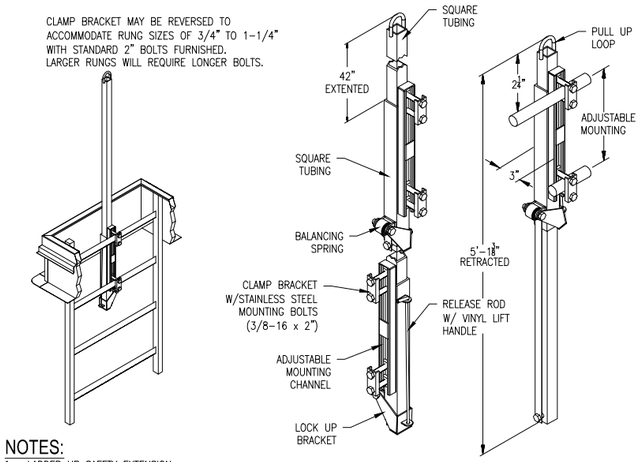

NOTES:
1. LADDER UP SAFETY EXTENSION SHALL BE STAINLESS STEEL

1 LADDER UP SAFETY EXTENSION
N.T.S.

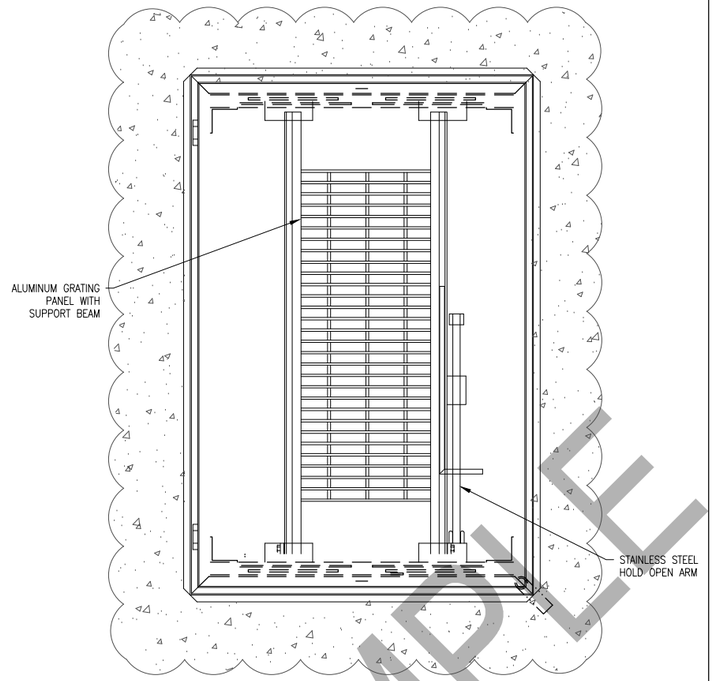

2 SAFETY GRATE DETAIL
N.T.S.

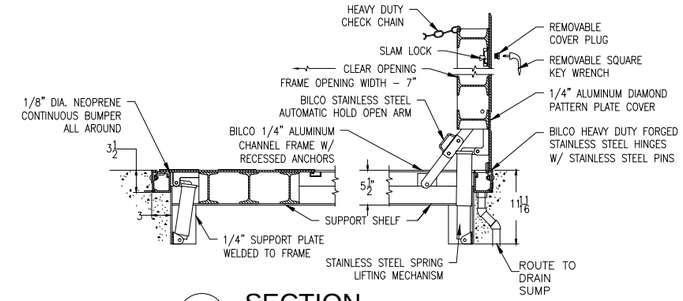

A SECTION
N.T.S.

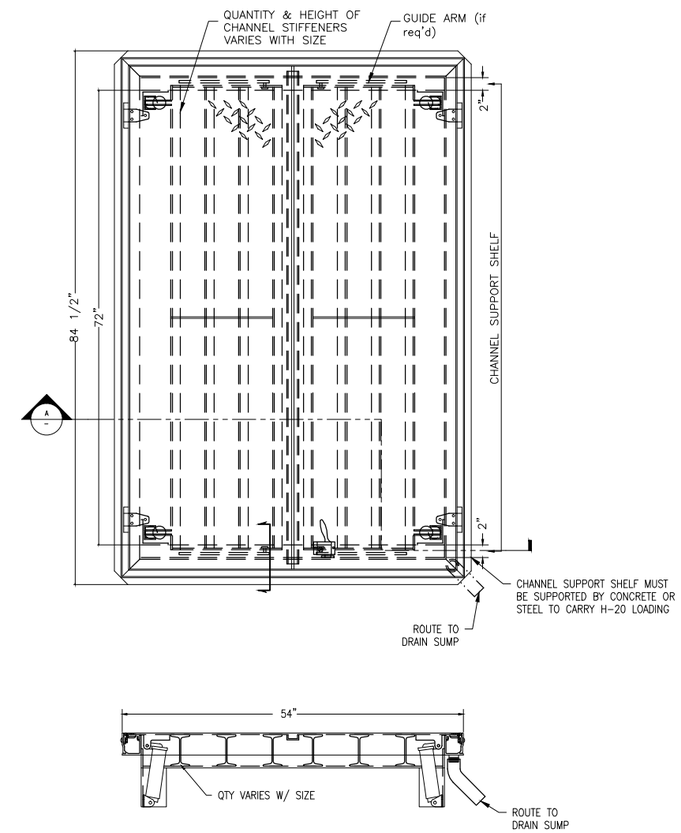

4 ACCESS DOOR DETAIL
N.T.S.

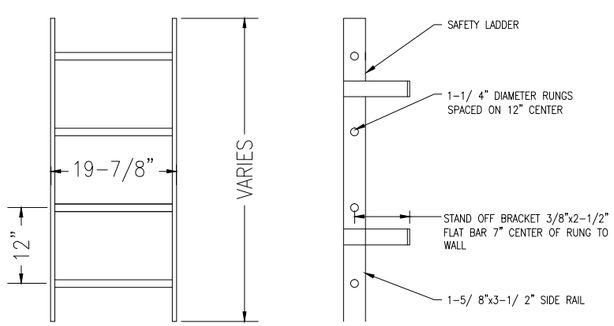

NOTES:
1. RUNGS SHOULD BE NONSKID.

3 LADDER DETAIL
N.T.S.

NOTES:
1. ALL ACCESS DOORS AND HATCHES TO BE H-20 RATED.

FOR SAMPLE ONLY

RECORD DRAWINGS
REVISIONS DRAWN BY: XX DATE: XX/XX/XX
THESE RECORD DRAWINGS HAVE BEEN PREPARED, IN PART, ON THE BASIS OF INFORMATION COMPILED BY OTHERS. THEY ARE NOT INTENDED TO REPRESENT IN DETAIL THE EXACT LOCATION, TYPE OF COMPONENT NOR MANNER OF CONSTRUCTION. THE ENGINEER WILL NOT BE RESPONSIBLE FOR ANY ERRORS OR OMISSIONS WHICH HAVE BEEN INCORPORATED INTO THE RECORD DRAWINGS.

EXAMPLE

FOR SEALS AND SIGNATURES

(PROJECT NAME)
MECHANICAL
MECHANICAL DETAILS
DESCHUTES COUNTY, OREGON

REVISIONS:

(CONSULTANT ENGINEER NAME, ADDRESS & PHONE NUMBER)

DESIGNED BY:
DRAWN BY:
SCALE:
FILE:
DATE:

VERIFY SCALES
0 1"
BAR EQUALS ONE INCH ON ORIGINAL DRAWING

SHEET:
M-103

COB # (XXXXXX)

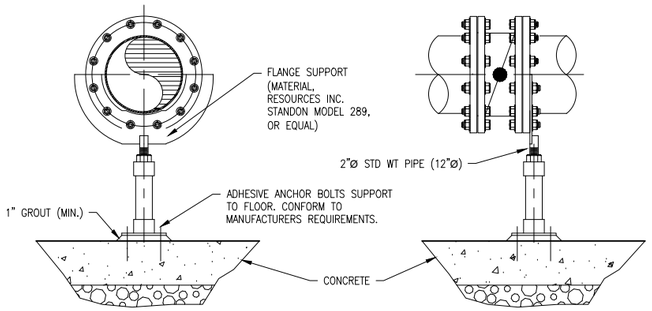

NOTE:

1. WELD TO RESIST UPLIFT PER MFR. RECOMMENDATIONS

5 PIPE SUPPORT
N.T.S.

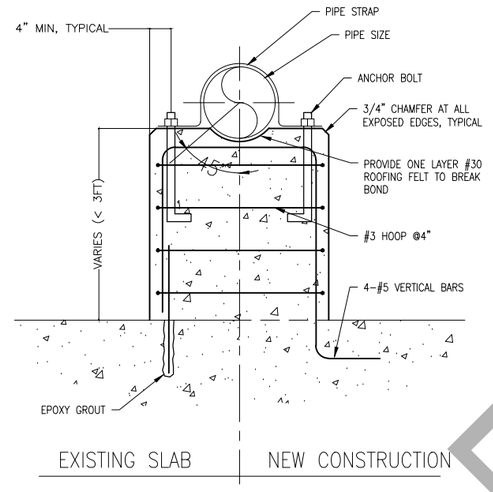

PIPE SIZE, DIA	PIPE STRAP	ANCHOR BOLTS, DIA	PEDESTAL THICKNESS
6"-12"	1/4"x2"	1/2"	12"

6 CONCRETE PEDESTAL SUPPORT
N.T.S.

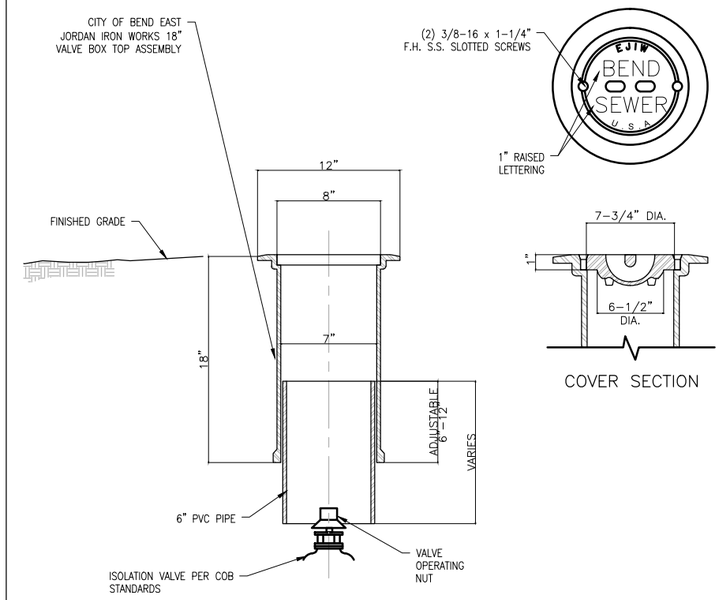

7 VALVE BOX
N.T.S.

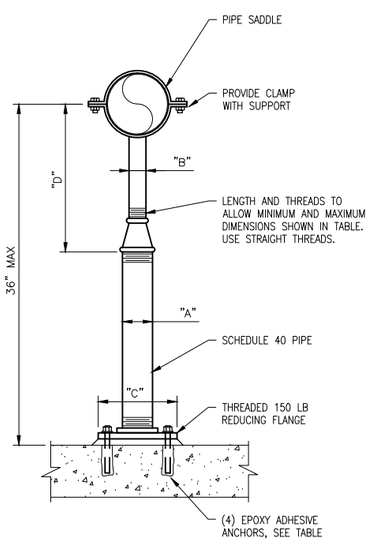

FLOOR PIPE SUPPORT SCHEDULE
DIMENSIONS IN INCHES

PIPE SIZE	"A"	"B"	"C"	"D"		ANCHORS	
				MINIMUM	MAXIMUM	DIA	EMBED
≤ 2 1/2	2 1/2	1 1/2	9	8	13	5/8	5
3	2 1/2	1 1/2	9	8 1/2	13 1/2	5/8	5
3 1/2	2 1/2	1 1/2	9	8 1/2	13 1/2	5/8	5
4	3	2 1/2	9	9 1/2	14	5/8	5
6	3	2 1/2	9	10 1/2	15 1/2	5/8	5
8	3	2 1/2	9	11 1/2	16 1/2	5/8	5
10	3	2 1/2	9	13 1/2	18 1/2	5/8	5
12	3	2 1/2	9	15	19 1/2	5/8	5

8 FLOOR PIPE SUPPORT
N.T.S.

EXAMPLE

FOR SAMPLE ONLY

RECORD DRAWINGS

REVISIONS DRAWN BY: XX DATE: XX/XX/XX

THESE RECORD DRAWINGS HAVE BEEN PREPARED, IN PART, ON THE BASIS OF INFORMATION COMPILED BY OTHERS. THEY ARE NOT INTENDED TO REPRESENT IN DETAIL THE EXACT LOCATION, TYPE OF COMPONENT NOR MANNER OF CONSTRUCTION. THE ENGINEER WILL NOT BE RESPONSIBLE FOR ANY ERRORS OR OMISSIONS WHICH HAVE BEEN INCORPORATED INTO THE RECORD DRAWINGS.

FOR SEALS AND SIGNATURES

(PROJECT NAME)
MECHANICAL

MECHANICAL DETAILS

DESCHUTES COUNTY, OREGON

REVISIONS:

(CONSULTANT ENGINEER NAME, ADDRESS & PHONE NUMBER)

DESIGNED BY:
DRAWN BY:
SCALE:
FILE:
DATE:

VERIFY SCALES
0 1"
BAR EQUALS ONE INCH ON ORIGINAL DRAWING

SHEET:
M-104

COB # (XXXXXX)

SHEET X OF X

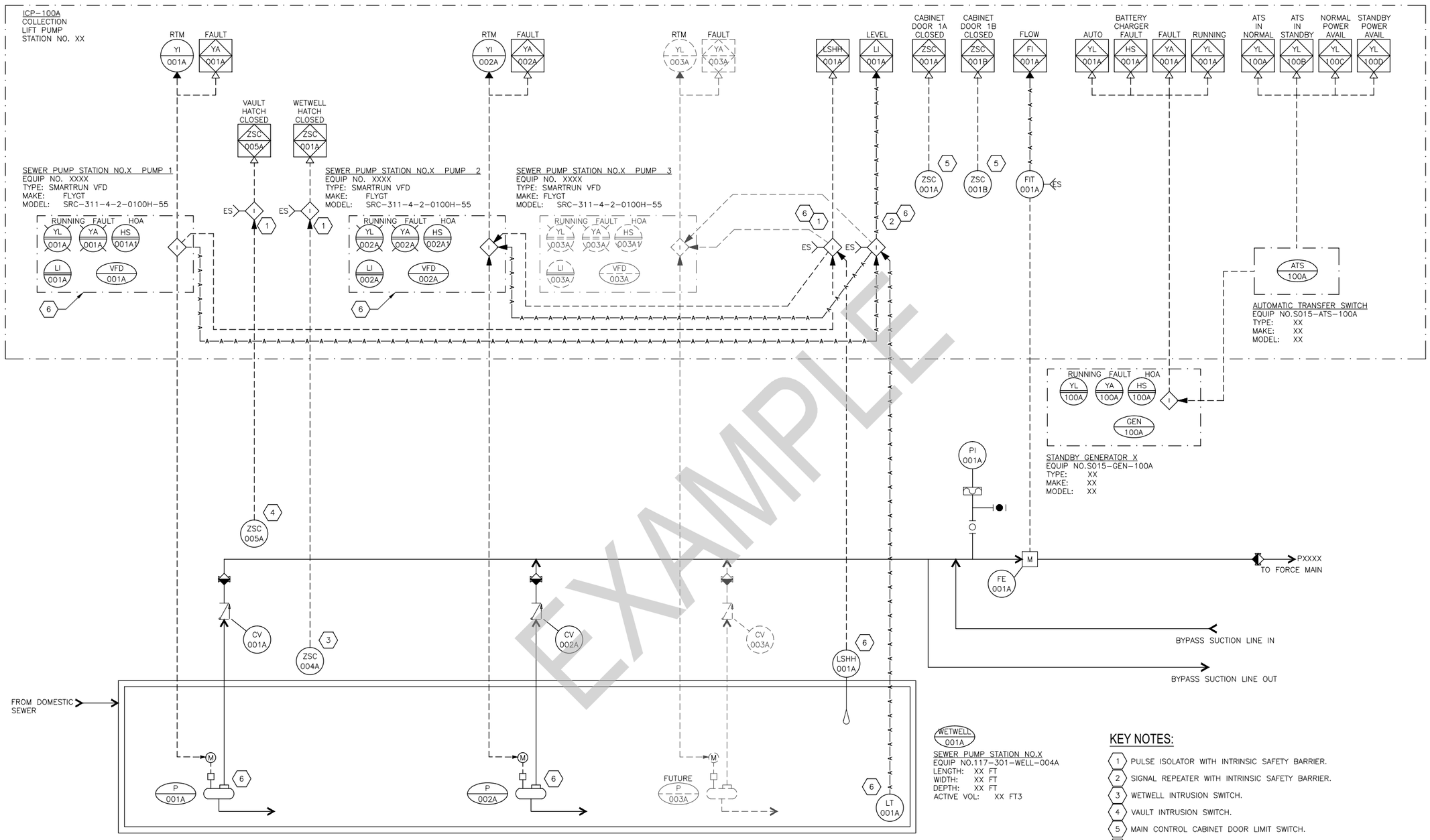

EXAMPLE

SEWER PUMP STATION NO.X
PUMP NO. 1
EQUIP NO. XXXX
TYPE: SUBMERSIBLE
CAPACITY: XX GPM
HEAD: XX FT
POWER: XX HP

SEWER PUMP STATION NO.X
PUMP NO. 2
EQUIP NO. XXXX
TYPE: SUBMERSIBLE
CAPACITY: XX GPM
HEAD: XX FT
POWER: XX HP

FUTURE SEWER
PUMP STATION NO.X
PUMP NO. 3
EQUIP NO. XXXX
TYPE: SUBMERSIBLE
CAPACITY: XX GPM
HEAD: XX FT
POWER: XX HP

WETWELL 001A
SEWER PUMP STATION NO.X
EQUIP NO.117-301-WELL-004A
LENGTH: XX FT
WIDTH: XX FT
DEPTH: XX FT
ACTIVE VOL: XX FT3

KEY NOTES:

1. PULSE ISOLATOR WITH INTRINSIC SAFETY BARRIER.
2. SIGNAL REPEATER WITH INTRINSIC SAFETY BARRIER.
3. WETWELL INTRUSION SWITCH.
4. VAULT INTRUSION SWITCH.
5. MAIN CONTROL CABINET DOOR LIMIT SWITCH.
6. PUMPS, VFD'S, SUBMERSIBLE LEVEL TRANSMITTER, HIGH FLOAT SWITCH AND INTRINSIC SAFETY BARRIERS ARE PROVIDED BY THE PUMP SUPPLIER. THE VFD'S SHALL INCLUDE A HUMAN INTERFACE MODULE (HIM). THE PUMP STATUS AND WET WELL LEVEL SHALL BE DISPLAYED ON THE HIM.

FOR SAMPLE ONLY

RECORD DRAWINGS

REVISIONS DRAWN BY: XX DATE: XX/XX/XX

THESE RECORD DRAWINGS HAVE BEEN PREPARED, IN PART, ON THE BASIS OF INFORMATION COMPILED BY OTHERS. THEY ARE NOT INTENDED TO REPRESENT IN DETAIL THE EXACT LOCATION, TYPE OF COMPONENT NOR MANNER OF CONSTRUCTION. THE ENGINEER WILL NOT BE RESPONSIBLE FOR ANY ERRORS OR OMISSIONS WHICH HAVE BEEN INCORPORATED INTO THE RECORD DRAWINGS.

FOR SEALS AND SIGNATURES

(PROJECT NAME)
INSTRUMENTATION & CONTROLS

STANDARD P&ID CONSTANT

DESCHUTES COUNTY, OREGON

REVISIONS:

(CONSULTANT ENGINEER NAME, ADDRESS & PHONE NUMBER)

DESIGNED BY: XXX
DRAWN BY: XXX
SCALE: NONE
FILE: I-001.dwg
DATE:

VERIFY SCALES
0 1"
BAR EQUALS ONE INCH ON ORIGINAL DRAWING

SHEET:
I-001

COB # (XXXXXX)

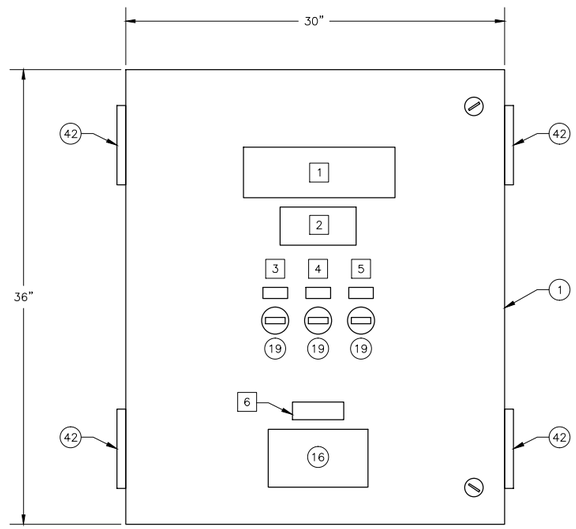

EXTERIOR FRONT ELEVATION

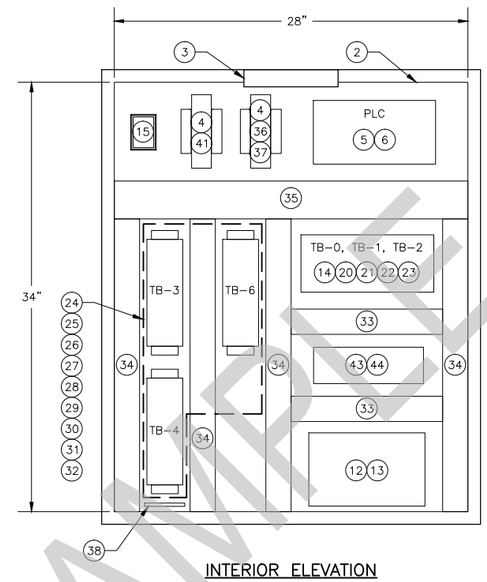

INTERIOR ELEVATION

1 CONTROL PANEL
PANEL LAYOUT ELEVATION
N.T.S.

GENERAL NOTES:

1. PANEL CONSTRUCTION PER NEC 2014, UL 508A REQUIREMENTS, FOLLOW NFPA 79 WHERE APPLICABLE.
2. PANEL WIRING EXCEPT WHERE OTHER SPECIFIED:
   - SINGLE WIRES SHALL BE THHN 16AWG, EXCEPT WHERE INTENDED FOR POWER OR MOTOR CIRCUITS WHICH SHALL BE 12AWG, MIN.
   - COLOR CODE SHALL FOLLOW UL 508A.
   - TWISTED PAIR ANALOG SIGNAL CABLE SHALL BE BELDEN 8760 OR EQUAL.
   - EACH WIRE SHALL BE IDENTIFIED WITH A PERMANENT WIRE LABEL, P/N BRADY LAT-18-361.
3. PANEL FABRICATOR SHALL PROVIDE ENGRAVED NAMEPLATES AS INDICATED AND LOCATED ON THIS DRAWING. REFERENCE OWNER'S ELECTRICAL SPECIFICATIONS FOR MATERIAL, FABRICATION, AND INSTALLATION DETAILS.
4. PANEL FABRICATOR TO LABEL ALL FUSES, TERMINAL BLOCKS, CIRCUIT BREAKERS WITH DEVICE DESIGNATION OR WIRE NUMBER AS SHOWN USING MANUFACTURER APPROPRIATE LABELING SYSTEM.
5. CONTROL PANEL SHALL NOT BE FABRICATED WITH A FALSE FRONT.
6. PROVIDE A MINIMUM OF 10% AVAILABLE TERMINAL BLOCKS.
7. PANEL LAYOUT SHALL RESERVE SPACE TO ADD A MINIMUM OF TWO PLC EXPANSION MODULES.

LEGEND:

[X] INDICATES BILL OF MATERIALS (BOM) ITEM; REFERENCE SHEET I-003

(X) INDICATES NAMEPLATE ITEM; REFERENCE SHEET I-003

EXAMPLE

FOR SAMPLE ONLY

RECORD DRAWINGS

REVISIONS DRAWN BY: XX DATE: XX/XX/XX

THESE RECORD DRAWINGS HAVE BEEN PREPARED, IN PART, ON THE BASIS OF INFORMATION COMPILED BY OTHERS. THEY ARE NOT INTENDED TO REPRESENT IN DETAIL THE EXACT LOCATION, TYPE OF COMPONENT NOR MANNER OF CONSTRUCTION. THE ENGINEER WILL NOT BE RESPONSIBLE FOR ANY ERRORS OR OMISSIONS WHICH HAVE BEEN INCORPORATED INTO THE RECORD DRAWINGS.

FOR SEALS AND SIGNATURES

(PROJECT NAME)
CONTROL PANEL TYPE B
TEMPLATE (50 I/Os) PANEL LAYOUT
DESCHUTES COUNTY, OREGON

REVISIONS:

(CONSULTANT ENGINEER NAME, ADDRESS & PHONE NUMBER)

DESIGNED BY: XXX
DRAWN BY: XXX
SCALE: NONE
FILE: I-002.dwg
DATE:

VERIFY SCALES
0 1"
BAR EQUALS ONE INCH ON ORIGINAL DRAWING

SHEET:
I-002

COB # (XXXXXX)

BILL OF MATERIALS

ITEM	QTY	DESCRIPTION	MANUFACTURE	MODEL/CAT #	SUPPLIER
1	1	ENCLOSURE	HOFFMAN	CSD363010 OR APPROVED EQUAL	PF
2	1	BACK PANEL	HOFFMAN	CP3630	PF
3	1	LIGHTING KIT	HOFFMAN	ALF16D12R	PF
4	AR	MOUNTING ALUMINUM BRACKETS	SHOP SUPPLY	SHOP SUPPLY	PF
5	1	MICROLOGIX 1400 WITH ETHERNET PORT	ALLEN-BRADLEY	1766-L32BXB	PF
6	1	1762 AI MODULE	ALLEN-BRADLEY	1762-IF4	PF
7	–	–	–	–	–
8	–	–	–	–	–
9	–	–	–	–	–
10	–	–	–	–	–
11	–	–	–	–	–
12	1	24VDC POWER SUPPLY	PULS	QS10.241	PF
13	1	24VDC UPS WITH INTEGRATED BATTERY	PULS	UBC10-241	PF
14	2	15A CIRCUIT BREAKER	ALLEN-BRADLEY	1492-SP1C150	PF
15	1	SURGE SUPPRESSOR	CONTROL CONCEPTS	ISLATROL IE-120	PF
16	1	DATA INTERFACE PORT	HOFFMAN	HGF5CN	PF
17	–	–	–	–	–
18	–	–	–	–	–
19	3	ELECTROMECHANICAL HOUR METER	REDINGTON	732-0014	PF
20	AR	10A CB4200 SERIES CIRCUIT BREAKER	WEIDMULLER	910 190 3500	PF
21	AR	0.5A CB4200 SERIES CIRCUIT BREAKER	WEIDMULLER	910 100 3500	PF
22	AR	3A CB4200 SERIES CIRCUIT BREAKER	WEIDMULLER	910 170 3500	PF
23	AR	2A CB4200 SERIES CIRCUIT BREAKER	WEIDMULLER	910 150 3500	PF
24	AR	0.1A CB4200 SERIES CIRCUIT BREAKER	WEIDMULLER	910 417 3500	PF
25	AR	FEED THROUGH TERMINAL WDU 2.5 (BEIGE)	WEIDMULLER	–	PF
26	AR	FEED THROUGH TERMINAL WDU 2.5 BL (BLUE)	WEIDMULLER	–	PF
27	AR	GROUNDING TERMINAL WPE 2.5	WEIDMULLER	–	PF
28	AR	END PLATE WAP 2.5-10 (BEIGE)	WEIDMULLER	–	PF
29	AR	END PLATE WAP 2.5-10 BL (BLUE)	WEIDMULLER	–	PF
30	AR	PARTITION WTW EN (DARK BEIGE)	WEIDMULLER	–	PF
31	AR	END BRACKET WEW 35/2 (DARK BEIGE)	WEIDMULLER	–	PF
32	AR	ZINC PLATED YELLOW-CHROMATE STEEL T-35 DIN RAIL	SHOP SUPPLY	SHOP SUPPLY	PF
33	AR	1.5" W X 3" D WIREWAY W/ COVER	PANDUIT	F1.5X3LG6 & C1.5LG6	PF
34	AR	2" W X 3" D WIREWAY W/ COVER	PANDUIT	F2X3LG6 & C2LG6	PF
35	AR	3" W X 3" D WIREWAY W/ COVER	PANDUIT	F3X3LG6 & C3LG6	PF
36	1	8 PORT NETWORK SWITCH	SIXNET	SLX-8MS	PF
37	1	6FT CAT6 PATCH CABLE	SHOP SUPPLY	SHOP SUPPLY	PF
38	2	GROUND BUS	SHOP SUPPLY	SHOP SUPPLY	PF
39	–	–	–	–	–
40	–	–	–	–	–
41	1	LONG RANGE IP/ETHERNET RADIO	GE MDS	TO BE DETERMINED BY CITY STAFF	PF
42	4	LOUVER WITH FILTER	HOFFMAN	AVK44 / AFLT44	PF
43	1	4-POLE ICE CUBE RELAY / SOCKET	ALLEN-BRADLEY	700-HF34Z24-4 / 700-HN139	PF
44	5	2-POLE ICE CUBE RELAY / SOCKET	ALLEN-BRADLEY	700-HF32Z24-4 / 700-HN116	PF

NOTE: ALL MATERIALS SHOWN ARE THE MINIMUM REQUIREMENTS AND SHALL BE REVIEWED AND APPROVED BY THE CITY OF BEND DURING PRELIMINARY DESIGN

PF = PANEL FABRICATOR
COB = CITY OF BEND

NAMEPLATE SCHEDULE

NAMEPLATE	LINE	NAMEPLATE	PLATE SIZE	LETTERING SIZE
1	1	LIFT STATION XX LOCAL CONTROL PANEL	4" X 10"	1/2"
	2	WXXX-ICP-XXXB		1"
	–	–		–
2	1	120VAC POWER	3" X 6"	1/4"
	2	FROM PANELS		1/4"
	3	XXXXXX & XXXXXX		1/4"
3	1	PUMP 1 RTM	1/2" X 1"	3/16"
	–	–		–
	–	–		–
4	1	PUMP 2 RTM	1/2" X 1"	3/16"
	–	–		–
	–	–		–
5	1	PUMP 3 RTM	1/2" X 1"	3/16"
	–	–		–
	–	–		–
6	1	PORTABLE PROGRAMMING	1" X 3"	3/16"
	2	TERMINAL POWER		3/16"
	3	ONLY		3/16"

EXAMPLE

FOR SAMPLE ONLY

RECORD DRAWINGS

REVISIONS DRAWN BY: XX DATE: XX/XX/XX

THESE RECORD DRAWINGS HAVE BEEN PREPARED, IN PART, ON THE BASIS OF INFORMATION COMPILED BY OTHERS. THEY ARE NOT INTENDED TO REPRESENT IN DETAIL THE EXACT LOCATION, TYPE OF COMPONENT NOR MANNER OF CONSTRUCTION. THE ENGINEER WILL NOT BE RESPONSIBLE FOR ANY ERRORS OR OMISSIONS WHICH HAVE BEEN INCORPORATED INTO THE RECORD DRAWINGS.

FOR SEALS AND SIGNATURES

(PROJECT NAME)
CNTR PNL TYPE B TEMPLATE
(50 I/Os) BILL OF MATERIALS
DESCHUTES COUNTY, OREGON

REVISIONS:

(CONSULTANT ENGINEER NAME, ADDRESS & PHONE NUMBER)

DESIGNED BY: XXX
DRAWN BY: XXX
SCALE: NONE
FILE: I-003.dwg
DATE:

VERIFY SCALES
0 1"
BAR EQUALS ONE INCH ON ORIGINAL DRAWING

SHEET:
I-003

COB # (XXXXXX)

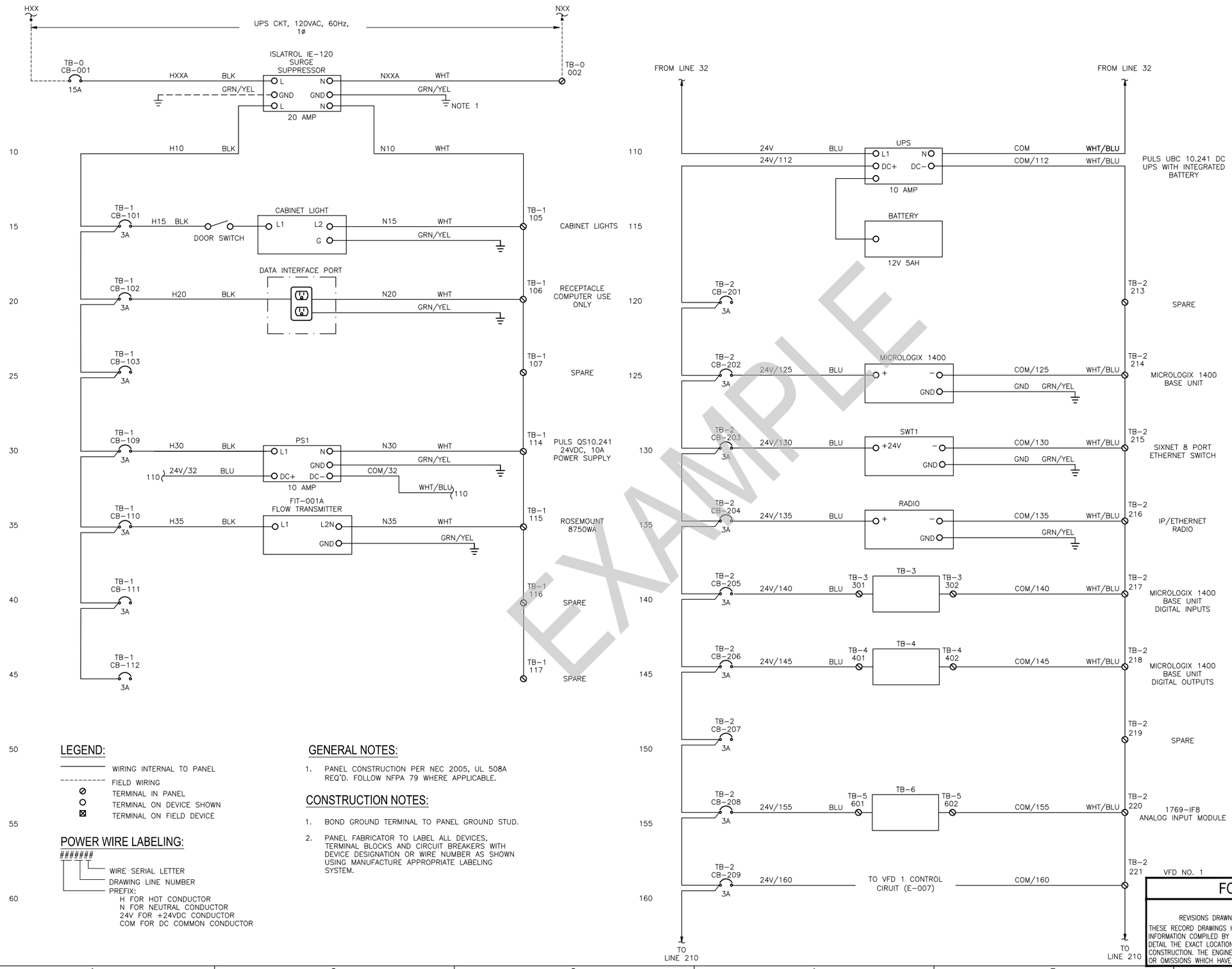

LEGEND:

- WIRING INTERNAL TO PANEL
- FIELD WIRING
- TERMINAL IN PANEL
- TERMINAL ON DEVICE SHOWN
- TERMINAL ON FIELD DEVICE

POWER WIRE LABELING:

#######

- WIRE SERIAL LETTER
- DRAWING LINE NUMBER
- PREFIX:
  - H FOR HOT CONDUCTOR
  - N FOR NEUTRAL CONDUCTOR
  - 24V FOR +24VDC CONDUCTOR
  - COM FOR DC COMMON CONDUCTOR

GENERAL NOTES:

1. PANEL CONSTRUCTION PER NEC 2005, UL 508A REQ'D. FOLLOW NFPA 79 WHERE APPLICABLE.

CONSTRUCTION NOTES:

1. BOND GROUND TERMINAL TO PANEL GROUND STUD.
2. PANEL FABRICATOR TO LABEL ALL DEVICES, TERMINAL BLOCKS AND CIRCUIT BREAKERS WITH DEVICE DESIGNATION OR WIRE NUMBER AS SHOWN USING MANUFACTURE APPROPRIATE LABELING SYSTEM.

EXAMPLE

FOR SAMPLE ONLY

RECORD DRAWINGS

REVISIONS DRAWN BY: XX DATE: XX/XX/XX

THESE RECORD DRAWINGS HAVE BEEN PREPARED, IN PART, ON THE BASIS OF INFORMATION COMPILED BY OTHERS. THEY ARE NOT INTENDED TO REPRESENT IN DETAIL THE EXACT LOCATION, TYPE OF COMPONENT NOR MANNER OF CONSTRUCTION. THE ENGINEER WILL NOT BE RESPONSIBLE FOR ANY ERRORS OR OMISSIONS WHICH HAVE BEEN INCORPORATED INTO THE RECORD DRAWINGS.

FOR SEALS AND SIGNATURES

(PROJECT NAME) CNTR PNL TYPE B TEMPLATE

(50 I/Os) PWR WIRING SCHEMATIC

DESCHUTES COUNTY, OREGON

REVISIONS:

(CONSULTANT ENGINEER NAME, ADDRESS & PHONE NUMBER)

DESIGNED BY: XXX
DRAWN BY: XXX
SCALE: NONE
FILE: I-004.dwg
DATE:

VERIFY SCALES
0 1"
BAR EQUALS ONE INCH ON ORIGINAL DRAWING

SHEET:
I-004

COB # (XXXXXX)

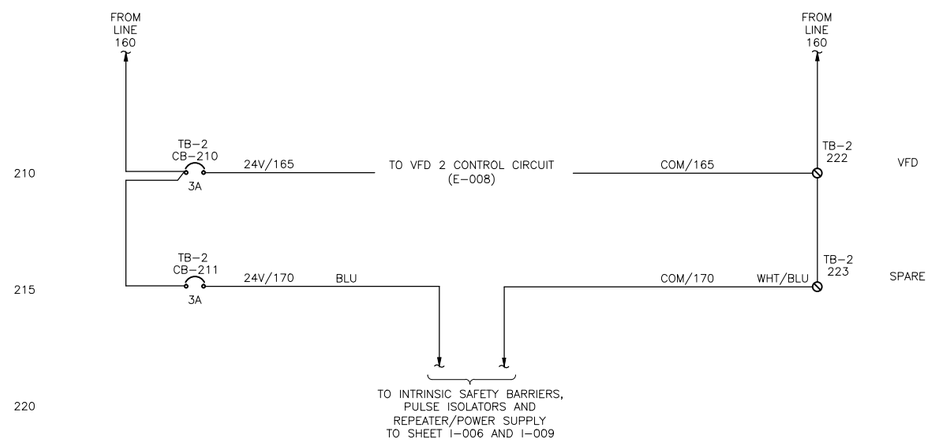

LEGEND:

- WIRING INTERNAL TO PANEL
- FIELD WIRING
- TERMINAL IN PANEL
- TERMINAL ON DEVICE SHOWN
- TERMINAL ON FIELD DEVICE

POWER WIRE LABELING:

#######

- WIRE SERIAL LETTER
- DRAWING LINE NUMBER
- PREFIX:
  - H FOR HOT CONDUCTOR
  - N FOR NEUTRAL CONDUCTOR
  - 24V FOR +24VDC CONDUCTOR
  - COM FOR DC COMMON CONDUCTOR

GENERAL NOTES:

1. PANEL CONSTRUCTION PER NEC, UL 508A REQ'D. FOLLOW NFPA 79 WHERE APPLICABLE.

CONSTRUCTION NOTES:

1. BOND GROUND TERMINAL TO PANEL GROUND STUD.
2. PANEL FABRICATOR TO LABEL ALL DEVICES, TERMINAL BLOCKS AND CIRCUIT BREAKERS WITH DEVICE DESIGNATION OR WIRE NUMBER AS SHOWN USING MANUFACTURE APPROPRIATE LABELING SYSTEM.

EXAMPLE

FOR SAMPLE ONLY

RECORD DRAWINGS

REVISIONS DRAWN BY: XX DATE: XX/XX/XX

THESE RECORD DRAWINGS HAVE BEEN PREPARED, IN PART, ON THE BASIS OF INFORMATION COMPILED BY OTHERS. THEY ARE NOT INTENDED TO REPRESENT IN DETAIL THE EXACT LOCATION, TYPE OF COMPONENT NOR MANNER OF CONSTRUCTION. THE ENGINEER WILL NOT BE RESPONSIBLE FOR ANY ERRORS OR OMISSIONS WHICH HAVE BEEN INCORPORATED INTO THE RECORD DRAWINGS.

FOR SEALS AND SIGNATURES

(PROJECT NAME)
CNTR PNL TYPE B TEMPLATE
(50 I/Os) PWR WIRING SCHEMATIC
DESCHUTES COUNTY, OREGON

REVISIONS:

(CONSULTANT ENGINEER NAME, ADDRESS & PHONE NUMBER)

DESIGNED BY: XXX
DRAWN BY: XXX
SCALE: NONE
FILE: I-005.dwg
DATE:

VERIFY SCALES
0 1"
BAR EQUALS ONE INCH ON ORIGINAL DRAWING

SHEET:
I-005

COB # (XXXXXX)

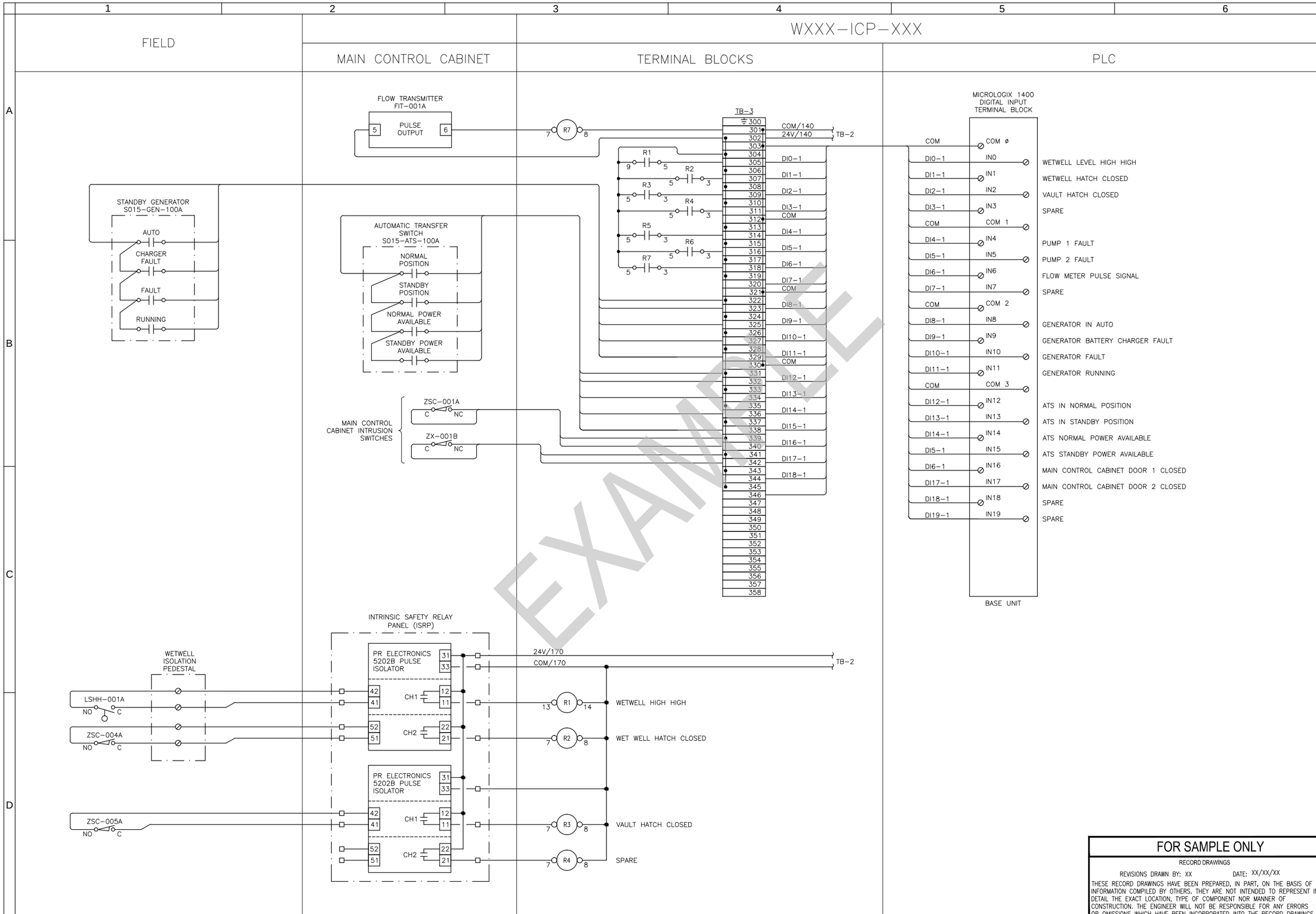

EXAMPLE

FOR SEALS AND SIGNATURES

(PROJECT NAME)
CNTR PNL TYPE B TEMPLATE
(50 I/Os) DIGITAL INPUT MODULE 1
DESCHUTES COUNTY, OREGON

REVISIONS:

(CONSULTANT ENGINEER NAME, ADDRESS & PHONE NUMBER)

DESIGNED BY: XXX
DRAWN BY: XXX
SCALE: NONE
FILE: I-006.dwg
DATE:

VERIFY SCALES
0 1"
BAR EQUALS ONE INCH ON ORIGINAL DRAWING

SHEET:
I-006

COB # (XXXXXX)

FOR SAMPLE ONLY

RECORD DRAWINGS

REVISIONS DRAWN BY: XX DATE: XX/XX/XX

THESE RECORD DRAWINGS HAVE BEEN PREPARED, IN PART, ON THE BASIS OF INFORMATION COMPILED BY OTHERS. THEY ARE NOT INTENDED TO REPRESENT IN DETAIL THE EXACT LOCATION, TYPE OF COMPONENT NOR MANNER OF CONSTRUCTION. THE ENGINEER WILL NOT BE RESPONSIBLE FOR ANY ERRORS OR OMISSIONS WHICH HAVE BEEN INCORPORATED INTO THE RECORD DRAWINGS.

FIELD	MAIN CONTROL CABINET	WXXX–ICP–XXX TERMINAL BLOCKS	WXXX–ICP–XXX PLC

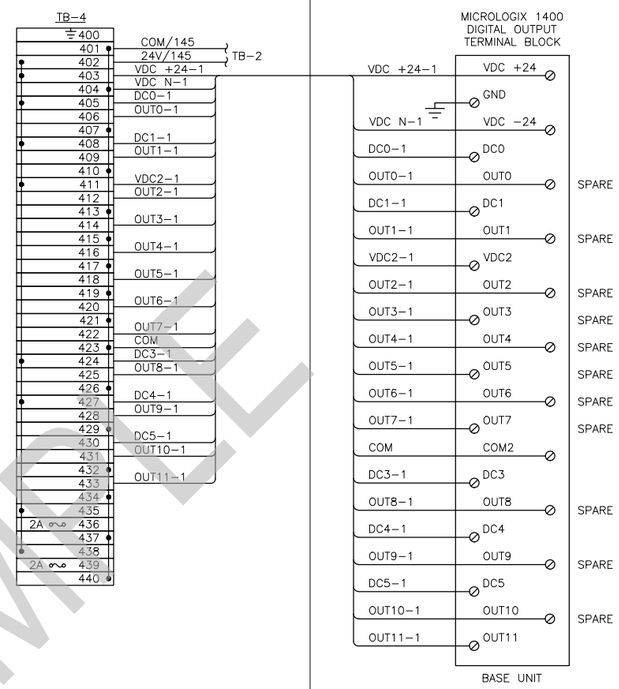

EXAMPLE

FOR SAMPLE ONLY

RECORD DRAWINGS

REVISIONS DRAWN BY: XX DATE: XX/XX/XX

THESE RECORD DRAWINGS HAVE BEEN PREPARED, IN PART, ON THE BASIS OF INFORMATION COMPILED BY OTHERS. THEY ARE NOT INTENDED TO REPRESENT IN DETAIL THE EXACT LOCATION, TYPE OF COMPONENT NOR MANNER OF CONSTRUCTION. THE ENGINEER WILL NOT BE RESPONSIBLE FOR ANY ERRORS OR OMISSIONS WHICH HAVE BEEN INCORPORATED INTO THE RECORD DRAWINGS.

FOR SEALS AND SIGNATURES

(PROJECT NAME)
CNTR PNL TYPE B TEMPLATE
(50 I/Os) DIGITAL INPUT MODULE 2
DESCHUTES COUNTY, OREGON

REVISIONS:

(CONSULTANT ENGINEER NAME, ADDRESS & PHONE NUMBER)

DESIGNED BY: XXX
DRAWN BY: XXX
SCALE: NONE
FILE: I-007.dwg
DATE:

VERIFY SCALES
0 1"
BAR EQUALS ONE INCH ON ORIGINAL DRAWING

SHEET:
I-007

COB # (XXXXXX)

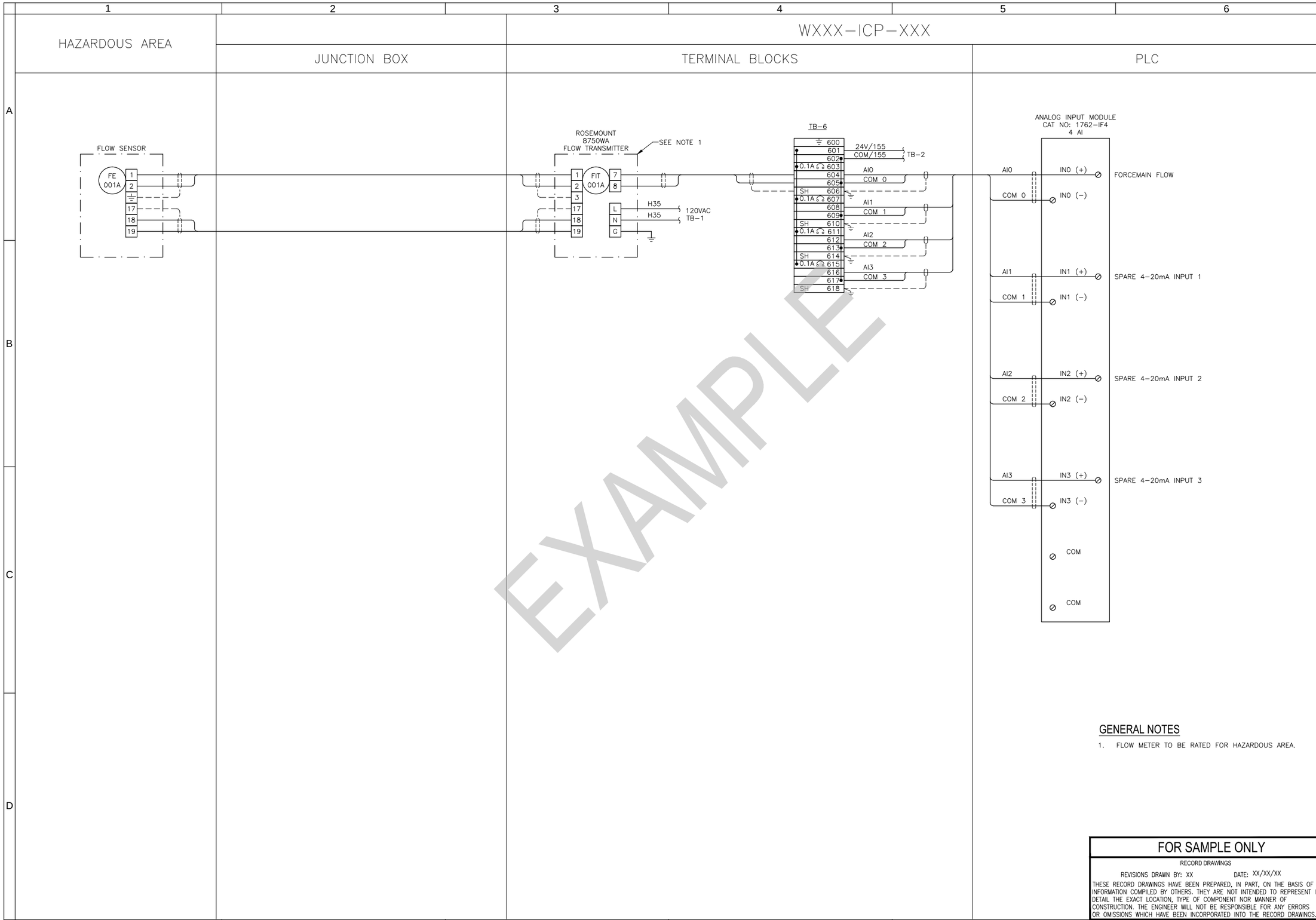

GENERAL NOTES

1. FLOW METER TO BE RATED FOR HAZARDOUS AREA.

EXAMPLE

FOR SAMPLE ONLY

RECORD DRAWINGS

REVISIONS DRAWN BY: XX DATE: XX/XX/XX

THESE RECORD DRAWINGS HAVE BEEN PREPARED, IN PART, ON THE BASIS OF INFORMATION COMPILED BY OTHERS. THEY ARE NOT INTENDED TO REPRESENT IN DETAIL THE EXACT LOCATION, TYPE OF COMPONENT NOR MANNER OF CONSTRUCTION. THE ENGINEER WILL NOT BE RESPONSIBLE FOR ANY ERRORS OR OMISSIONS WHICH HAVE BEEN INCORPORATED INTO THE RECORD DRAWINGS.

FOR SEALS AND SIGNATURES

(PROJECT NAME)
CNTR PNL TYPE B TEMPLATE
(50 I/Os) ANALOG INPUT MODULE
DESCHUTES COUNTY, OREGON

REVISIONS:

(CONSULTANT ENGINEER NAME, ADDRESS & PHONE NUMBER)

DESIGNED BY: XXX
DRAWN BY: XXX
SCALE: NONE
FILE: I-008.dwg
DATE:

VERIFY SCALES
0 1"
BAR EQUALS ONE INCH ON ORIGINAL DRAWING

SHEET:
I-008

COB # (XXXXXX)

SHEET X OF X

FIELD	JUNCTION BOX	MAIN CONTROL CABINET

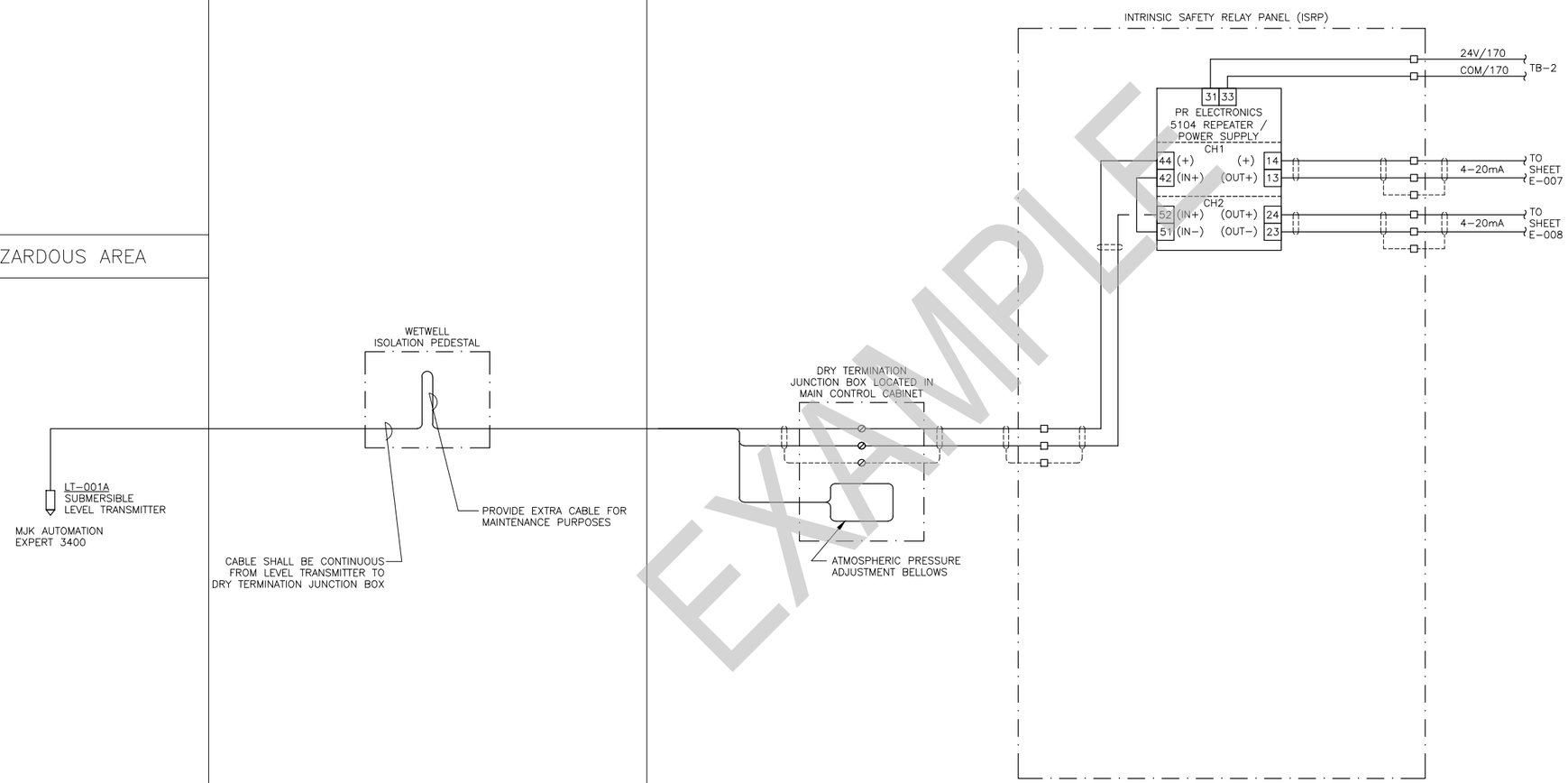

EXAMPLE

FOR SAMPLE ONLY

RECORD DRAWINGS

REVISIONS DRAWN BY: XX DATE: XX/XX/XX

THESE RECORD DRAWINGS HAVE BEEN PREPARED, IN PART, ON THE BASIS OF INFORMATION COMPILED BY OTHERS. THEY ARE NOT INTENDED TO REPRESENT IN DETAIL THE EXACT LOCATION, TYPE OF COMPONENT NOR MANNER OF CONSTRUCTION. THE ENGINEER WILL NOT BE RESPONSIBLE FOR ANY ERRORS OR OMISSIONS WHICH HAVE BEEN INCORPORATED INTO THE RECORD DRAWINGS.

FOR SEALS AND SIGNATURES

(PROJECT NAME)
INSTRUMENTATION & CONTROLS

INTRINSIC SAFETY RELAY PANEL (ISRP)

DESCHUTES COUNTY, OREGON

REVISIONS:

(CONSULTANT ENGINEER NAME, ADDRESS & PHONE NUMBER)

DESIGNED BY: XXX
DRAWN BY: XXX
SCALE: NONE
FILE: I-009.dwg
DATE:

VERIFY SCALES
0 1"
BAR EQUALS ONE INCH ON ORIGINAL DRAWING

SHEET:
I-009

COB # (XXXXXX)

SHEET X OF X

FIELD

WXXX–ICP–XXX

PLC CONTROL PANEL

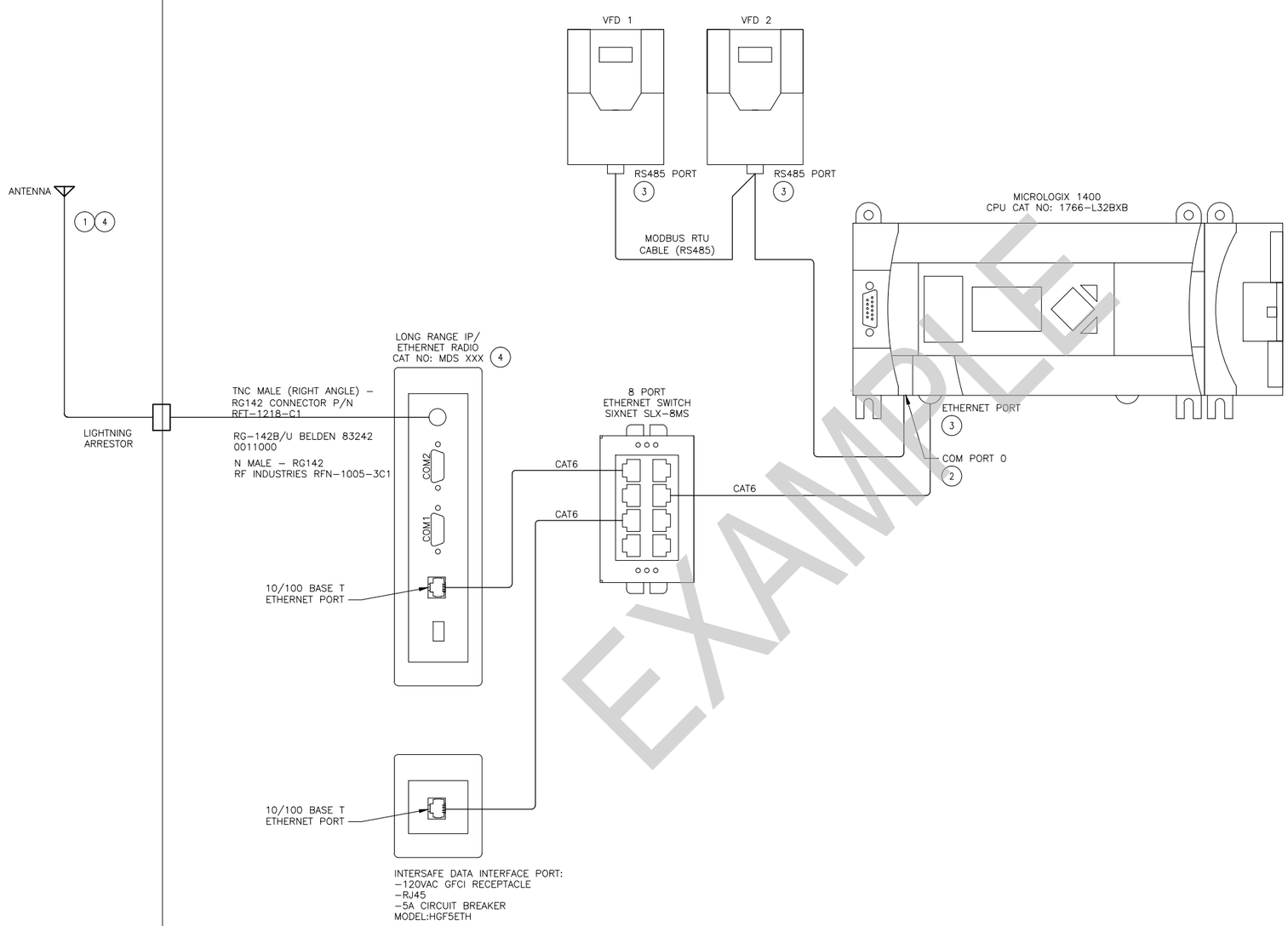

EXAMPLE

LEGEND:

——— COMMUNICATION WIRING

GENERAL NOTES:

1. PANEL FABRICATOR TO PROVIDE AND INSTALL ALL CABLES AS SHOWN ON DIAGRAM.
2. FOR DRAWING INDEX, SEE DRAWING X–XXX.
3. FOR GENERAL NOTES, ABBREVIATIONS, AND SYMBOL LEGENDS, SEE DRAWINGS X–XXX.

KEY NOTES:

1. PULL ANTENNA GROUND WIRE IN MAST WITH ANTENNA COAX CABLE. TERMINATE ANTENNA GROUND ON MAIN CONTROL CABINET GROUND BUS.
2. 8–PIN MINI DIN RS–232C/RS–485 CONNECTOR.
3. RJ485 CONNECTOR. COMMUNICATIONS CABLE INTERCONNECTIONS SHALL BE AS REQUIRED TO MEET MANUFACTURER REQUIREMENTS.
4. RADIO MAKE, MODEL, ANTENNA TYPE, AND ANTENNA CABLES TO BE DETERMINED BY CITY STAFF AND IS DEPENDENT ON SITE CONDITIONS AND LOCATION.

FOR SAMPLE ONLY

RECORD DRAWINGS

REVISIONS DRAWN BY: XX DATE: XX/XX/XX

THESE RECORD DRAWINGS HAVE BEEN PREPARED, IN PART, ON THE BASIS OF INFORMATION COMPILED BY OTHERS. THEY ARE NOT INTENDED TO REPRESENT IN DETAIL THE EXACT LOCATION, TYPE OF COMPONENT NOR MANNER OF CONSTRUCTION. THE ENGINEER WILL NOT BE RESPONSIBLE FOR ANY ERRORS OR OMISSIONS WHICH HAVE BEEN INCORPORATED INTO THE RECORD DRAWINGS.

FOR SEALS AND SIGNATURES

(PROJECT NAME)
CONTROL PANEL

COMMUNICATION NETWORK DIAGRAM

DESCHUTES COUNTY, OREGON

REVISIONS:

(CONSULTANT ENGINEER NAME, ADDRESS & PHONE NUMBER)

DESIGNED BY: XXX
DRAWN BY: XXX
SCALE: NONE
FILE: I-010.dwg
DATE:

VERIFY SCALES
0 1"
BAR EQUALS ONE INCH ON ORIGINAL DRAWING

SHEET:
I-010

COB # (XXXXXX)

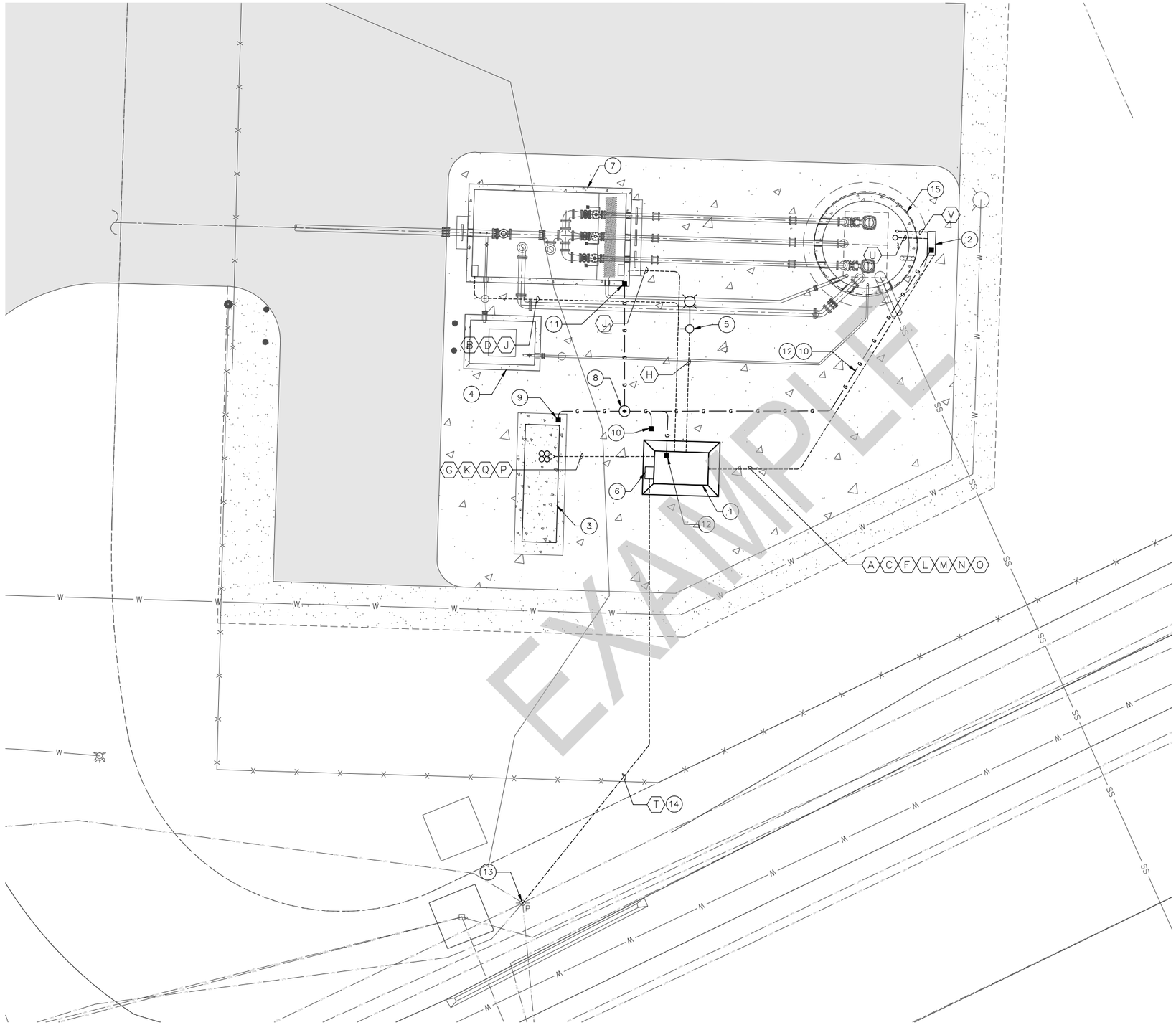

N

5 0 5
SCALE: 1"=5'

GENERAL NOTES:

1. ALL GROUNDING SHALL BE DONE IN ACCORDANCE WITH THE LATEST EDITION AND REVISION OF THE NATIONAL ELECTRIC CODE AND THE REGULATIONS OF THE STATE AND LOCAL CODES. ALL EQUIPMENT SHALL BE UNDERWRITER'S LABORATORY APPROVED. WHERE GROUND CABLES ARE EXPOSED THEY SHALL BE INSTALLED IN 1" DIA PVC SCHEDULE 80 CONDUIT FOR PHYSICAL PROTECTION.
2. PROVIDE #2/0 BARE COPPER GROUND WIRE UNLESS OTHERWISE NOTED.
3. (X) NOTES, SEE E-004

KEY NOTES:

1. MAIN CONTROL CABINET. SEE DWG E-002.
2. WETWELL ISOLATION PEDESTAL. SEE DWG E-005.
3. STANDBY GENERATOR WITH WEATHERPROOF, SOUND ATTENUATING ENCLOSURE. PROVIDE LOAD CALCULATION.
4. ODOR CONTROL VAULT. SEE CIVIL DRAWINGS.
5. SITE LIGHTING. LED AREA LIGHT WITH FOUNDATION AND SQUARE POLE. MAXIMUM FIXTURE HEIGHT OF 14 FT. CREE EDGW SERIES LOW PROFILE WITH 100 LED COUNT AND TYPE III MEDIUM DISTRIBUTION, OR APPROVED EQUAL.
6. ELECTRIC UTILITY METER AND MAIN CIRCUIT BREAKER.
7. VALVE VAULT, PRESSURE TRANSDUCER AND FLOW METER. SEE CIVIL DRAWINGS.
8. GROUND TEST WELL.
9. BOND GROUND WIRE TO GENERATOR PAD REBAR AND TO THE GENERATOR ENCLOSURE.
10. BOND GROUND WIRE TO EQUIPMENT PAD REBAR.
11. BOND GROUND WIRE.
12. BOND GROUND WIRE TO EQUIPMENT PANEL.
13. EXISTING UTILITY POLE.
14. CONTRACTOR SHALL COORDINATE WITH THE UTILITY COMPANY TO INSTALL THE ELECTRICAL SERVICE.
15. WET WELL IS CLASS I DIVISION I. ALL ELECTRICAL WIRING SHALL COMPLY WITH NEC ARCTICLE 500.

HAZARDOUS AREAS:

WET WELL INTERIOR – CLASS I, DIVISION 1

WET WELL HATCH – CLASS I, DIVISION 2
(3' HORIZONTAL X 1.5' VERTICAL)

WIRE TRAY INTERIOR – CLASS I, DIVISION 1

WIRE TRAY EXTERIOR – CLASS I, DIVISION 2
(3' HORIZONTAL X 1.5' VERTICAL)

VALVE VAULT INTERIOR – CLASS I, DIVISION 1

SUBSURFACE AREAS ARE CONSIDERED UNCLASSIFIED UNLESS OTHERWISE NOTED

FOR SAMPLE ONLY

RECORD DRAWINGS

REVISIONS DRAWN BY: XX DATE: XX/XX/XX

THESE RECORD DRAWINGS HAVE BEEN PREPARED, IN PART, ON THE BASIS OF INFORMATION COMPILED BY OTHERS. THEY ARE NOT INTENDED TO REPRESENT IN DETAIL THE EXACT LOCATION, TYPE OF COMPONENT NOR MANNER OF CONSTRUCTION. THE ENGINEER WILL NOT BE RESPONSIBLE FOR ANY ERRORS OR OMISSIONS WHICH HAVE BEEN INCORPORATED INTO THE RECORD DRAWINGS.

FOR SEALS AND SIGNATURES

(PROJECT NAME) ELECTRICAL

ELECTRICAL SITE PLAN

DESCHUTES COUNTY, OREGON

REVISIONS:

(CONSULTANT ENGINEER NAME, ADDRESS & PHONE NUMBER)

DESIGNED BY: XXX
DRAWN BY: XXX
SCALE: NONE
FILE: E-001.dwg
DATE:

VERIFY SCALES
0 1"
BAR EQUALS ONE INCH ON ORIGINAL DRAWING

SHEET:
E-001

COB # (XXXXXX)

SHEET X OF X

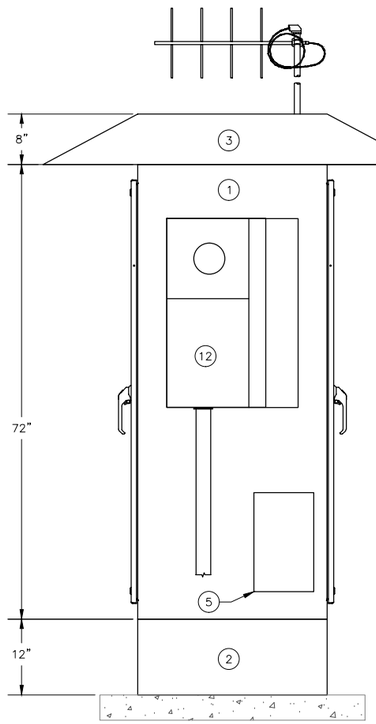

CABINET
LEFT EXTERIOR ELEVATION

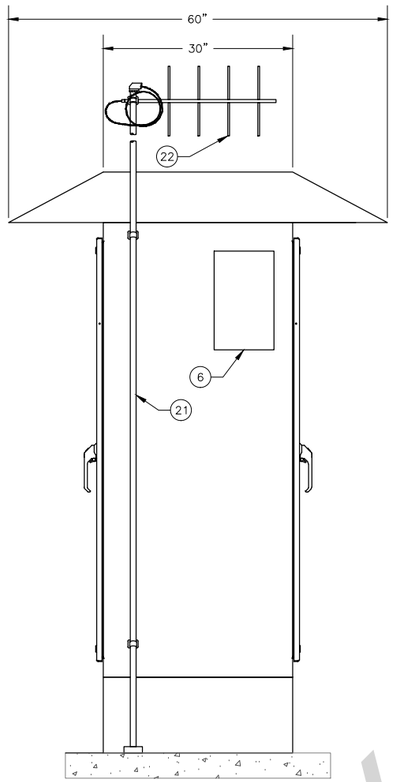

CABINET
RIGHT EXTERIOR ELEVATION

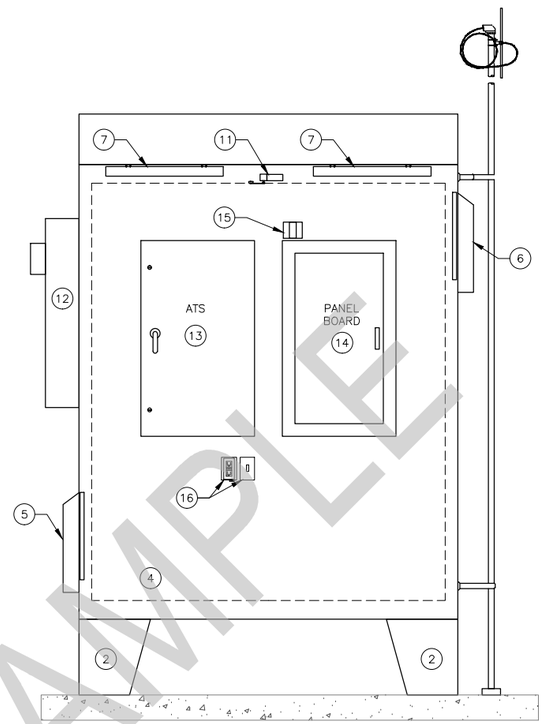

CABINET
FRONT INTERIOR ELEVATION

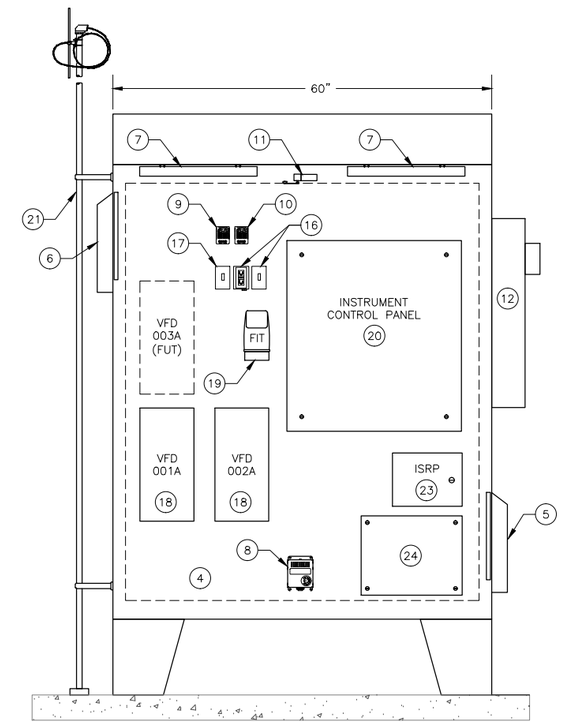

CABINET
BACK INTERIOR ELEVATION

KEY NOTES:

1. ENCLOSURE, 2-DOOR DUAL ACCESS
2. FLOOR STAND
3. RAINHOOD / SUNHOOD
4. MOUNTING PAN
5. COOLING FAN WITH FILTER
6. LOUVER WITH FILTER
7. CABINET LIGHT
8. CABINET HEATER
9. THERMOSTAT, COOLING
10. THERMOSTAT, HEATING
11. INTRUSION SWITCH
12. ELECTRIC SERVICE METER WITH MAIN BREAKER
13. AUTOMATIC TRANSFER SWITCH
14. PANEL BOARD
15. SURGE PROTECTION DEVICE
16. DUPLEX RECEPTACLE AND CABINET LIGHT SWITCH
17. LIGHT SWITCH, SITE LIGHT
18. SMARTRUN VFD
19. FLOW TRANSMITTER
20. INSTRUMENT CONTROL PANEL (ICP)
21. ANTENNA MAST, THREADED AT TOP WITH WEATHERHEAD
22. ANTENNA, NOTE 5
23. INTRINSIC SAFETY RELAY PANEL
24. LEVEL TRANSMITTER DRY TERMINATION J-BOX

CONSTRUCTION NOTES:

1. MAIN CONTROL CABINET SHALL BE NEMA 12 RATED, PAINTED STEEL WITH FLOOR STAND. CABINET DOORS SHALL BE FITTED WITH GASKETS, PADLOCKABLE HASPS, AND DOORS THAT LATCH OPEN. RAINHOOD/SUNHOOD SHALL BE CUSTOM FABRICATED FROM 12 GAUGE STEEL PAINTED WITH ANSI 61 LIGHT GREY POLYESTER POWDER FINISH TO MATCH ENCLOSURE.
2. PANEL CONSTRUCTION PER NEC AND UL508A REQUIREMENTS. FOLLOW NFPA 79 WHERE APPLICABLE. THE INTERIOR OF THE MAIN CONTROL CABINET SHALL BE DESIGNED AND FABRICATED TO MEET IP20 "FINGER-SAFE" REQUIREMENTS IN ACCORDANCE WITH IEC 60529; THERE SHALL BE NO EXPOSED LIVE PARTS AS DEFINED BY NFPA 70E. ALL INTERCONNECTIONS BETWEEN PANEL COMPONENTS INSIDE THE LARGER ELECTRICAL ENCLOSURE SHALL BE INSTALLED IN EMT, RGS, METAL WIREWAY, OR LIQUID TIGHT METALLIC FLEXIBLE CONDUIT.
3. NO PENETRATIONS THROUGH THE TOP OF THE ENCLOSURE ARE ALLOWED. ALL PENETRATIONS SHALL BE MADE WITH AN APPROVED FITTING AND GASKET.
4. DO NOT ROUTE 120VAC WIRING WITHING THE SAME RACEWAY AS DC ANALOG SIGNAL CABLES.
5. THE CITY OF BEND WILL DETERMINE THE RADIO TYPE, ANTENNA TYPE, MOUNTING HEIGHT, AND CABLE TYPE TO BE PROVIDED AND INSTALLED BY THE DEVELOPER. AT THE PRE-DESIGN STAGE, THE DEVELOPER SHALL COORDINATE FOR A TELEMETRY SIGNAL SURVEY TO BE PERFORMED WITH THE CITY OF BEND UTLITY DEPARTMENT AS REQUIRED TO DETERMINE RADIO COMMUNICATION EQUIPMENT REQUIREMENTS.
6. ALL UTILIZATION AND DISTRIBUTION EQUIPMENT, INCLUDING LIGHTING AND HEATING, SHALL BE WIRED FROM OR TO A SOURCE OTHER THAN THE PLC CONTROL PANEL. THIS REQUIRES A LOAD CENTER INSIDE THE MAIN CONTROL CABINET FOR POWER DISTRIBUTION.
7. EXCEPT AS OTHERWISE NOTED, PANEL WIRING SHALL BE AS FOLLOWS:
   - SINGLE WIRES SHALL BE THHN #16 AWG, EXCEPT WHERE INTENDED FOR POWER OR MOTOR CIRCUITS WHICH SHALL BE #14 AWG, MINIMUM.
   - COLOR CODE SHALL FOLLOW UL508A.
   - TWISTED PAIR ANALOG SIGNAL CABLE SHALL BE BELDEN 8760, OR EQUAL.
   - EACH WIRE SHALL BE IDENTIFIED WITH A PERMANENT WIRE LABEL, BRADY LAT-18-361.

1 MAIN CONTROL CABINET LAYOUT ELEVATION
N.T.S.

FOR SAMPLE ONLY
RECORD DRAWINGS
REVISIONS DRAWN BY: XX DATE: XX/XX/XX
THESE RECORD DRAWINGS HAVE BEEN PREPARED, IN PART, ON THE BASIS OF INFORMATION COMPILED BY OTHERS. THEY ARE NOT INTENDED TO REPRESENT IN DETAIL THE EXACT LOCATION, TYPE OF COMPONENT NOR MANNER OF CONSTRUCTION. THE ENGINEER WILL NOT BE RESPONSIBLE FOR ANY ERRORS OR OMISSIONS WHICH HAVE BEEN INCORPORATED INTO THE RECORD DRAWINGS.

EXAMPLE

FOR SEALS AND SIGNATURES

(PROJECT NAME)
INSTRUMENTATION & CONTROLS
MAIN CONTROL CABINET LAYOUT
DESCHUTES COUNTY, OREGON

REVISIONS:

(CONSULTANT ENGINEER NAME, ADDRESS & PHONE NUMBER)

DESIGNED BY: XXX
DRAWN BY: XXX
SCALE: NONE
FILE: E-002.dwg
DATE:

VERIFY SCALES
0 1"
BAR EQUALS ONE INCH ON ORIGINAL DRAWING

SHEET:
E-002

COB # (XXXXXX)

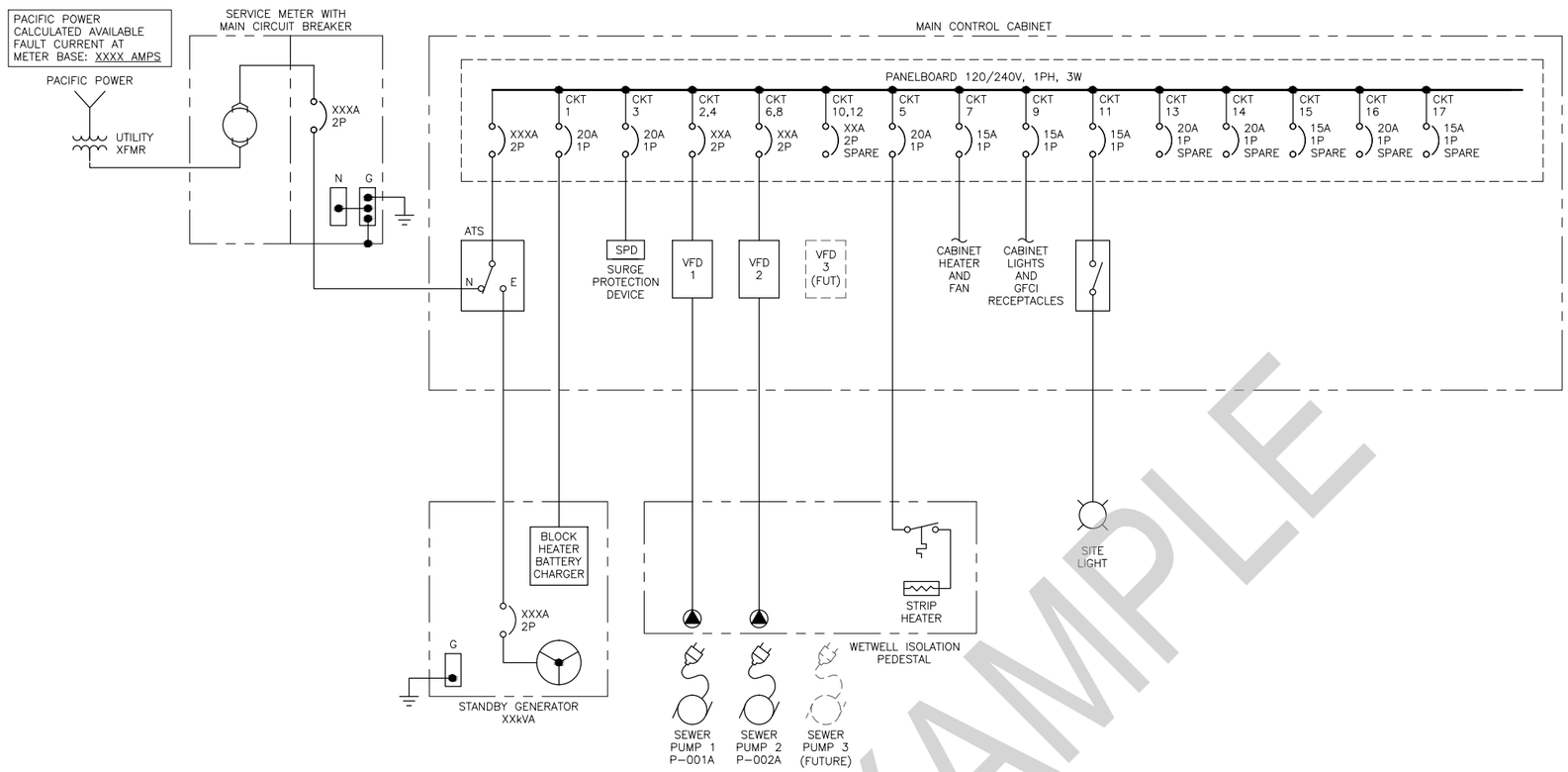

GENERAL NOTES:

1. ELECTRICAL SERVICE AND ELECTRICAL EQUIPMENT SHALL HAVE A MINIMUM OF 25% SPARE CAPACITY FOR FUTURE LOADS.
2. PANEL BOARD SHALL HAVE A MINIMUM OF 25% PREPARED CIRCUIT BREAKER SPACE FOR FUTURE LOADS.
3. POWER SUPPLY VOLTAGE AND PHASE SHALL BE SITE SPECIFIC AND BE APPROVED BY CITY STAFF.
4. VFD'S TO PROVIDE 3-PHASE POWER TO THE MOTOR FROM A SINGLE PHASE SOURCE.

LIFT STATION LOAD CHART (EXAMPLE)

LOAD DESCRIPTION	DUTY NO.	HP EACH	kVA EACH	TOTAL DUTY kVA	PLANT LOAD NO. kVA
PUMP 1	1	XX	XXX	XXX	XXX
PUMP 2	1	XX	XXX	XXX	XXX
PUMP 3 (FUTURE)		XX	XXX	XXX	XXX
GENERATOR BLOCK HEATER			XXX	XXX	XXX
CONTROL CABINET HEATER			XXX	XXX	XXX
ISOLATION HEAT			XXX	XXX	XXX
LOAD BANK HEAT			XXX	XXX	XXX
MISC LOAD			XXX	XXX	XXX
				TOTAL DUTY	DESIGN TOTAL
kVA SUBTOTAL				XXX	XXX
AMPS @240V, 3PH				XXX	XXX

GENERATOR LOAD TABLE (EXAMPLE)

LOAD REQUIREMENTS				PERFORMANCE REQUIREMENTS	
RUNNING kW	XXX			120/240V, 1PH, 3W	
RUNNING kVA	XXX			MAX VOLTAGE DIP	10%
RUNNING P.F.	XXX			MAX FREQUENCY DIP	2%
MAX START kW	XXX	IN STEP	2	MAX VOLTAGE HARMONIC DISTORTION	5%
MAX START kVA	XXX	IN STEP	2	MIN GENERATOR LOADED	30%
				MAX GENERATOR LOADED	100%
				TOTAL kW REQUIRED	XXX
				TOTAL AMPS REQUIRED	XXX

EXAMPLE

FOR SAMPLE ONLY
RECORD DRAWINGS
REVISIONS DRAWN BY: XX DATE: XX/XX/XX
THESE RECORD DRAWINGS HAVE BEEN PREPARED, IN PART, ON THE BASIS OF INFORMATION COMPILED BY OTHERS. THEY ARE NOT INTENDED TO REPRESENT IN DETAIL THE EXACT LOCATION, TYPE OF COMPONENT NOR MANNER OF CONSTRUCTION. THE ENGINEER WILL NOT BE RESPONSIBLE FOR ANY ERRORS OR OMISSIONS WHICH HAVE BEEN INCORPORATED INTO THE RECORD DRAWINGS.

FOR SEALS AND SIGNATURES

(PROJECT NAME)
INSTRUMENTATION & CONTROLS
ELECTRICAL ONE LINE DIAGRAM
DESCHUTES COUNTY, OREGON

REVISIONS:

(CONSULTANT ENGINEER NAME, ADDRESS & PHONE NUMBER)

DESIGNED BY: XXX
DRAWN BY: XXX
SCALE: NONE
FILE: E-003.dwg
DATE:

VERIFY SCALES
0 1"
BAR EQUALS ONE INCH ON ORIGINAL DRAWING

SHEET:
E-003

COB # (XXXXXX)

CONDUIT AND WIRE SCHEDULE						
CONDUIT USE	CONDUIT DESIGNATION	CONDUIT SIZE	CONDUIT TYPE	CONDUCTOR SIZE AND NUMBER OF CONDUCTORS	CONDUIT FROM	CONDUIT TO
FLOAT SWITCH LSHH WETWELL HATCH LIMIT SWITCH	A	1 INCH	PVC	6#14	THE MAIN CONTROL CABINET	THE ISOLATION PEDESTAL
FLOW SENSOR	B	1 INCH	PVC	MANUFACTURER CABLE	THE MAIN CONTROL CABINET	THE FLOW METER VAULT
SUBMERSIBLE LEVEL TRANSMITTER	C	3/4 INCH	PVC	MANUFACTURER CABLE	THE MAIN CONTROL CABINET	THE ISOLATION PEDESTAL
VALVE VAULT HATCH LIMIT SWITCH	D	1 INCH	PVC	3#14	THE MAIN CONTROL CABINET	THE FLOW METER VAULT
SEAL FAIL / OVER TEMP	E	1 INCH	PVC	8#14	THE MAIN CONTROL CABINET	THE ISOLATION PEDESTAL
GENERATOR CONTROL SIGNALS (ATS)	F	1 INCH	PVC	8#14	THE MAIN CONTROL CABINET	THE GENERATOR
OUTSIDE AREA LIGHT	G	1 INCH	PVC	2#12, 1#12G	THE MAIN CONTROL CABINET	THE LIGHT POLE
VALVE VAULT SPARE	H	1 INCH	PVC	PULL CORD	THE MAIN CONTROL CABINET	THE VALVE VAULT
GENERATOR BATTERY CHARGER / BLOCK HEATER	I	1 INCH	PVC	4#10, 2#10G	THE MAIN CONTROL CABINET	THE GENERATOR
ISOLATION PEDESTAL HEATER	J	1 INCH	PVC	2#12, 1#12G	THE MAIN CONTROL CABINET	THE ISOLATION PEDESTAL
PUMP #1	K	1 INCH	PVC	3#8, 1#10G	THE MAIN CONTROL CABINET	THE ISOLATION PEDESTAL
PUMP #2	L	1 INCH	PVC	3#8, 1#10G	THE MAIN CONTROL CABINET	THE ISOLATION PEDESTAL
PUMP #3 (FUTURE)	M	1 INCH	PVC	3#8, 1#10G	THE MAIN CONTROL CABINET	THE ISOLATION PEDESTAL
GENERATOR MONITORING SIGNALS (PLC)	N	1 INCH	PVC	8#14	THE MAIN CONTROL CABINET	THE GENERATOR
GENERATOR POWER	O	2 INCH	PVC	3#1/0, 1#6G	THE MAIN CONTROL CABINET	THE GENERATOR
UNDERGROUND SERVICE	P	3 INCH	PVC	PULL ROPE	UNDERGROUND SERVICE	MAIN CONTROL ENCLOSURE PAD
SUBMERSIBLE LEVEL TRANSMITTER	Q	1 INCH	PGRC	MANUFACTURER CABLE	THE WET WELL	THE ISOLATION PEDESTAL
FLOAT SWITCH LSHH	R	3/4 INCH	PGRC	MANUFACTURER CABLE	THE WET WELL	THE ISOLATION PEDESTAL
ANTENNA SUPPORT	W	2 INCH	PGRC	MANUFACTURER CABLE	THE MAIN CONTROL CABINET	WEATHER HEAD

GENERAL NOTES: (CONDUIT INSTALLATION)

1. ALL STRUT AND MOUNTING HARDWARE MUST BE STAINLESS STEEL.
2. MYERS HUB FITTING MUST BE USED ON ALL CONDUIT PENETRATIONS.
3. ALL CONDUIT MUST BE SCHEDULE 80 PVC.
4. THE PROPER TOOLS MUST BE USED WHILE CUTTING, THREADING, BENDING, AND TIGHTENING ANY PVC COATED CONDUIT.
5. THE PVE COATING MUST REMAIN INTACT ONLY 1 INCH OF THE COATING MAY BE REMOVED AT THE END OF THE CONDUIT TO ALLOW FOR THE THREAD.
6. ANY CONDUIT WITH THE DAMAGED COATING MUST BE REPLACED.
7. THE COATING TOUCH UP PAINT IS ONLY TO BE USED FOR COSMETIC BLEMISHES.
8. ALL THREADED CONNECTIONS MUST BE COPPER COATED AND TIGHTENED APPROPRIATELY.
9. ALL UNDERGROUND CONDUIT RUNS MUST BE INSPECTED PRIOR TO BACKFILL.

EXAMPLE

FOR SAMPLE ONLY

RECORD DRAWINGS

REVISIONS DRAWN BY: XX DATE: XX/XX/XX

THESE RECORD DRAWINGS HAVE BEEN PREPARED, IN PART, ON THE BASIS OF INFORMATION COMPILED BY OTHERS. THEY ARE NOT INTENDED TO REPRESENT IN DETAIL THE EXACT LOCATION, TYPE OF COMPONENT NOR MANNER OF CONSTRUCTION. THE ENGINEER WILL NOT BE RESPONSIBLE FOR ANY ERRORS OR OMISSIONS WHICH HAVE BEEN INCORPORATED INTO THE RECORD DRAWINGS.

FOR SEALS AND SIGNATURES

(PROJECT NAME)
INSTRUMENTATION & CONTROLS

CONDUIT AND WIRE SCHEDULE

DESCHUTES COUNTY, OREGON

REVISIONS:

(CONSULTANT ENGINEER NAME, ADDRESS & PHONE NUMBER)

DESIGNED BY: XXX
DRAWN BY: XXX
SCALE: NONE
FILE: E-004.dwg
DATE:

VERIFY SCALES
0 1"
BAR EQUALS ONE INCH ON ORIGINAL DRAWING

SHEET:
E-004

COB # (XXXXXX)

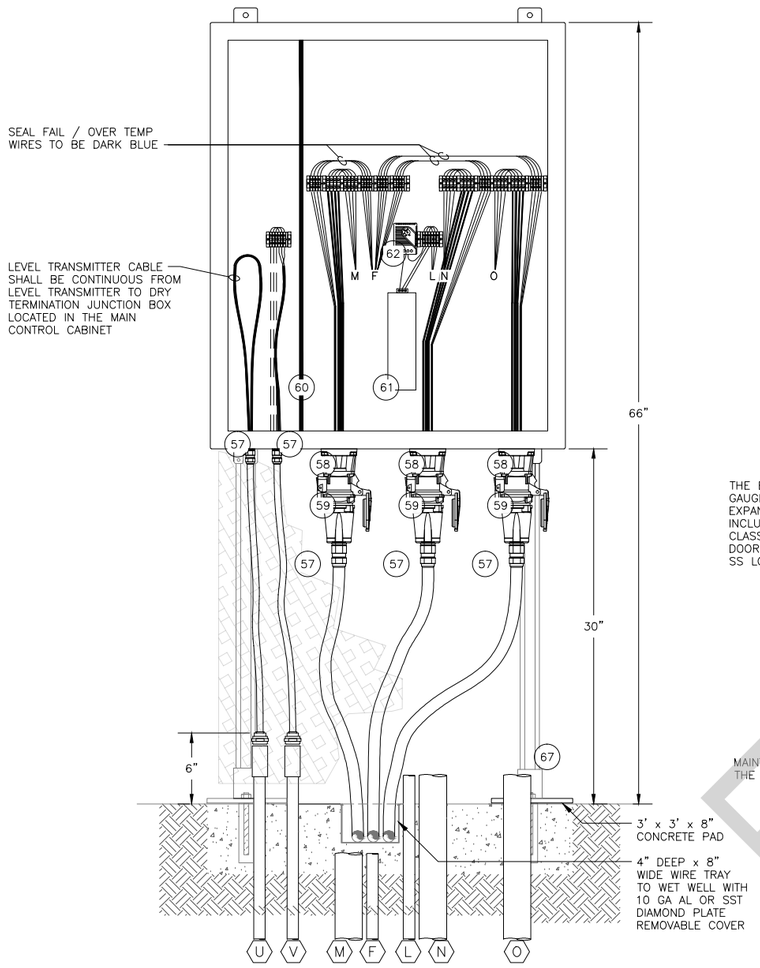

PEDESTAL ELEVATION

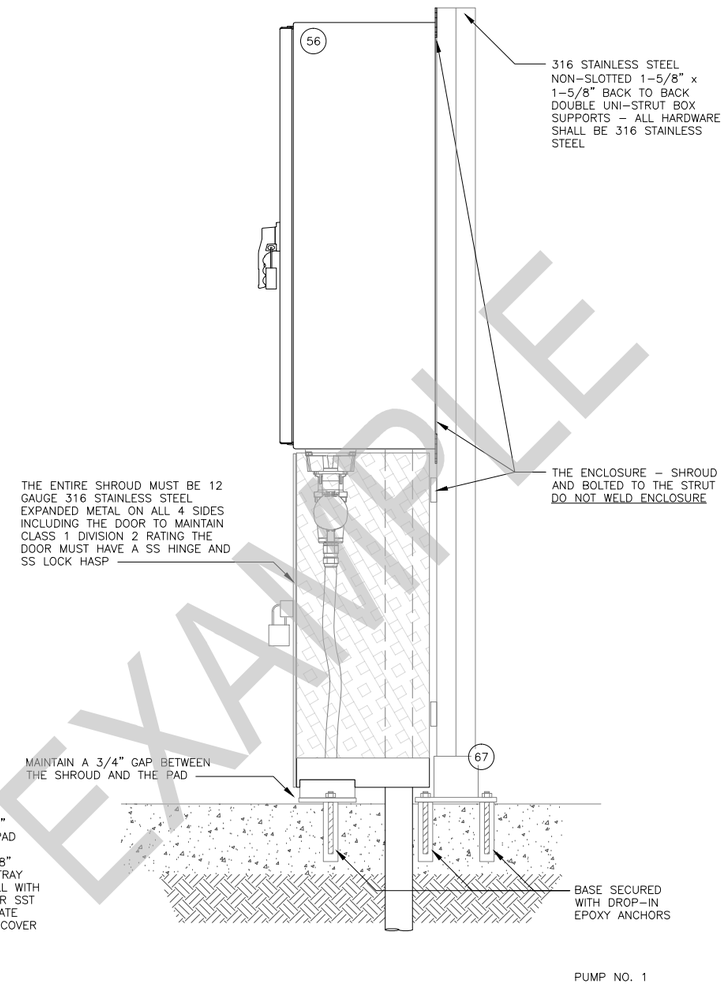

SIDE PEDESTAL FOOT MOUNTING

#	KEY NOTES:
56	ISOLATION PEDESTAL ENCLOSURE
57	CABLE SEAL
58	PUMP POWER RECEPTACLE
59	PUMP CORD CONNECTOR
60	ISOLATION PEDESTAL BARRIER
61	ISOLATION PEDESTAL HEATER
62	ISOLATION PEDESTAL HYGROSTAT
67	ISOLATION PEDESTAL POST BASE

X CONDUIT PENETRATIONS. SEE CONDUIT SCHEDULE SHEET E-004

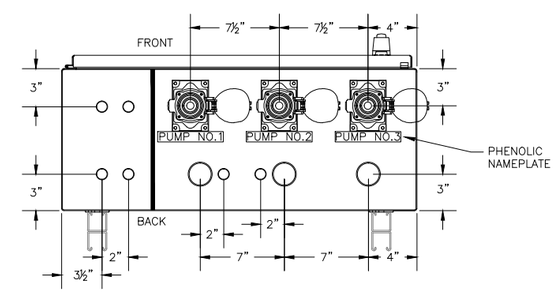

BOTTOM ENCLOSURE

1 WET WELL ISOLATION PEDESTAL ELEVATION

N.T.S.

EXAMPLE

FOR SAMPLE ONLY

RECORD DRAWINGS

REVISIONS DRAWN BY: XX DATE: XX/XX/XX

THESE RECORD DRAWINGS HAVE BEEN PREPARED, IN PART, ON THE BASIS OF INFORMATION COMPILED BY OTHERS. THEY ARE NOT INTENDED TO REPRESENT IN DETAIL THE EXACT LOCATION, TYPE OF COMPONENT NOR MANNER OF CONSTRUCTION. THE ENGINEER WILL NOT BE RESPONSIBLE FOR ANY ERRORS OR OMISSIONS WHICH HAVE BEEN INCORPORATED INTO THE RECORD DRAWINGS.

FOR SEALS AND SIGNATURES

(PROJECT NAME)
INSTRUMENTATION & CONTROLS

WETWELL ISOLATION PEDESTAL

DESCHUTES COUNTY, OREGON

REVISIONS:

(CONSULTANT ENGINEER NAME, ADDRESS & PHONE NUMBER)

DESIGNED BY: XXX
DRAWN BY: XXX
SCALE: NONE
FILE: E-005.dwg
DATE:

VERIFY SCALES
0 1"
BAR EQUALS ONE INCH ON ORIGINAL DRAWING

SHEET:
E-005

COB # (XXXXXX)

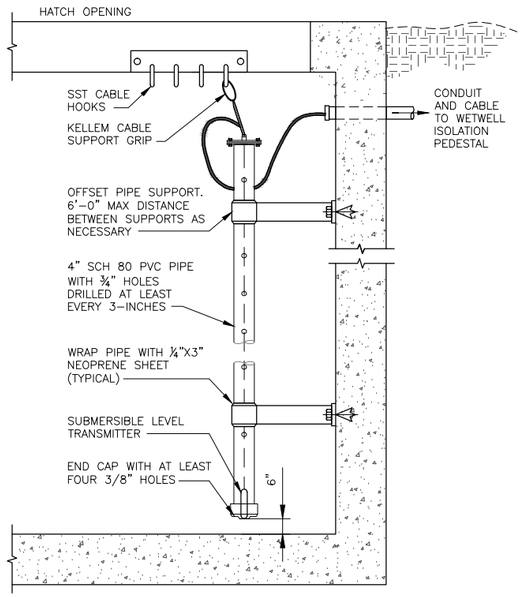

1 SUBMERSIBLE LEVEL TRANSMITTER

N.T.S.

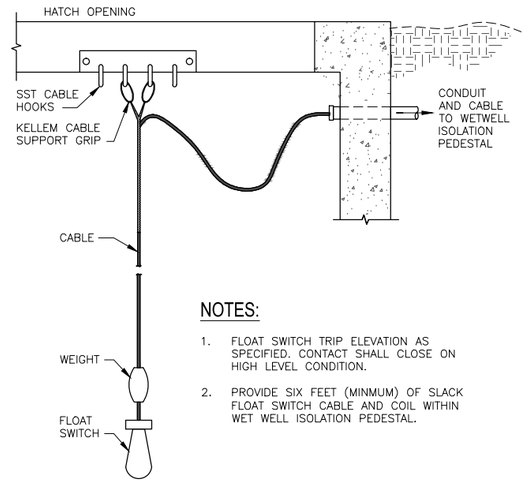

NOTES:

1. FLOAT SWITCH TRIP ELEVATION AS SPECIFIED. CONTACT SHALL CLOSE ON HIGH LEVEL CONDITION.
2. PROVIDE SIX FEET (MINMUM) OF SLACK FLOAT SWITCH CABLE AND COIL WITHIN WET WELL ISOLATION PEDESTAL.

2 SUSPENDED FLOAT SWITCH

N.T.S.

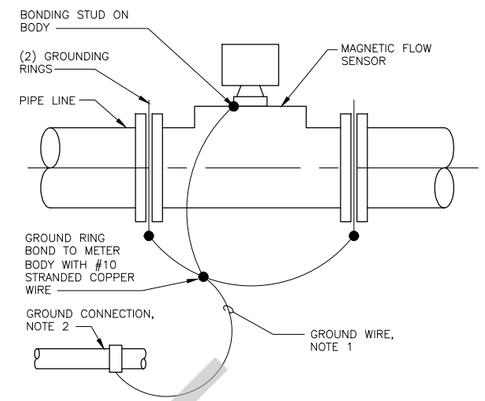

NOTES:

1. NO. 10 AWG INSULATED IF LENGTH IS LESS THA 6'. IF MORE THAN 6', INSTALL CONDUCTOR IN ¾" CONDUIT.
2. BOND MAGMETER TO ONE OF THE FOLLOWING ACCEPTABLE GROUNDS:
   A. POWER CIRCUIT GROUND CONDUCTOR AT TRANSMITTER.
   B. NEAREST AVAILABLE EQUIPMENT GROUND CONNECTION POINT.
   C. SEPARATE TAIL FROM EMBEDDED GROUND MAT.

3 MAGNETIC FLOW METER GROUNDING RING BONDING

N.T.S.

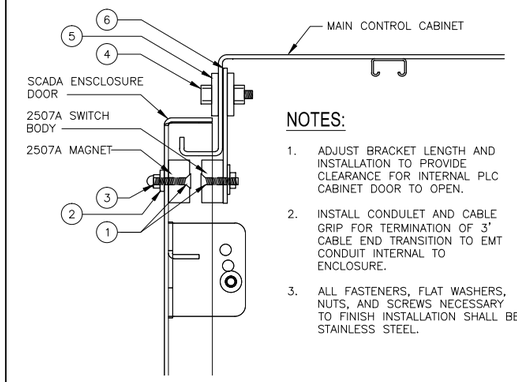

NOTES:

1. ADJUST BRACKET LENGTH AND INSTALLATION TO PROVIDE CLEARANCE FOR INTERNAL PLC CABINET DOOR TO OPEN.
2. INSTALL CONDULET AND CABLE GRIP FOR TERMINATION OF 3' CABLE END TRANSITION TO EMT CONDUIT INTERNAL TO ENCLOSURE.
3. ALL FASTENERS, FLAT WASHERS, NUTS, AND SCREWS NECESSARY TO FINISH INSTALLATION SHALL BE STAINLESS STEEL.

BILL OF MATERIALS	
ITEM	DESCRIPTION
1	8-32 ⅝" FLATHEAD MACHINE SCREW, STAINLESS STEEL
2	#8 BONDED SEALING WASHER, STAINLESS STEEL
3	8-32 ACORN NUT, STAINLESS STEEL
4	1/4"-28 x 3/4" HEX CAP SCREW, STAINLESS STEEL
5	1/4" BONDED SEALING WASHER, STAINLESS STEEL
6	ALUMINUM BRACKET, SHOP SUPPLIED

4 MAIN CONTROL CABINET INTRUSION SWITCH

N.T.S.

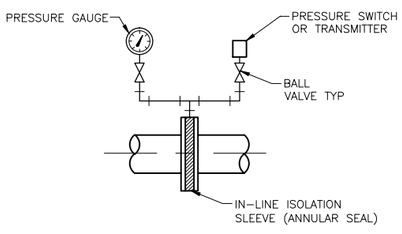

NOTES:

1. MOUNT PRESSURE GAUGE IN VERTICAL FOR VIEWING.
2. INDICATOR AND PRESSURE SWITCH INSTALLATION AS SPECIFIED FOR SINGLE INSTRUMENT INSTALLATIONS, MOUNT DEVICE DIRECTLY TO ANNULAR SEAL.

5 IN-LINE ISOLATION SLEEVE PRESSUSE SWITCH/TRANSMITTER

N.T.S.

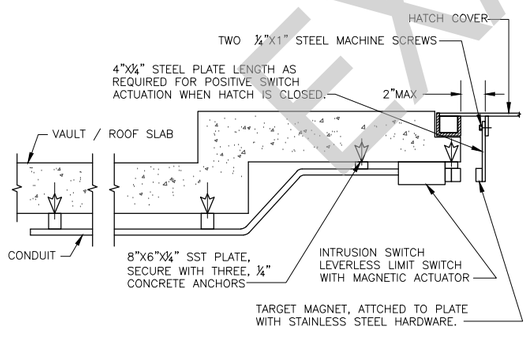

NOTES:

1. THE INSTALLATION DETAIL SHOWN IS GENERIC. ACTUAL INSTALLATIONS MAY VARY.

6 HATCH INTRUSION SWITCH INSTALLATION

N.T.S.

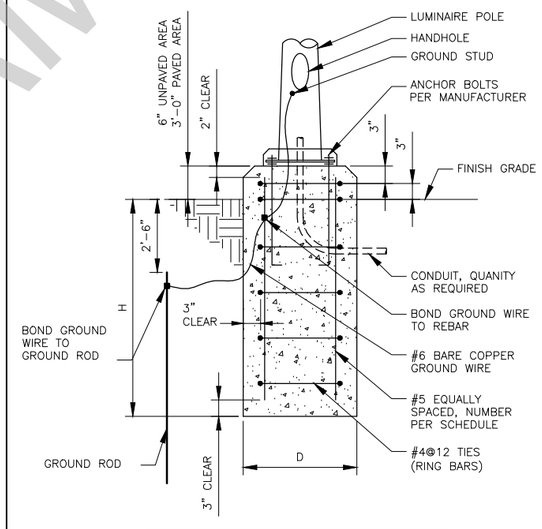

DIMENSION SCHEDULE			
POLE HEIGHT	MINIMUM D	MINIMUM H	VERTICAL REBAR EACH
UP TO 10'	2'-0"	4'-6"	6
11' TO 20'	2'-0"	6'-6"	6

7 LIGHT STANDARD BASE

N.T.S.

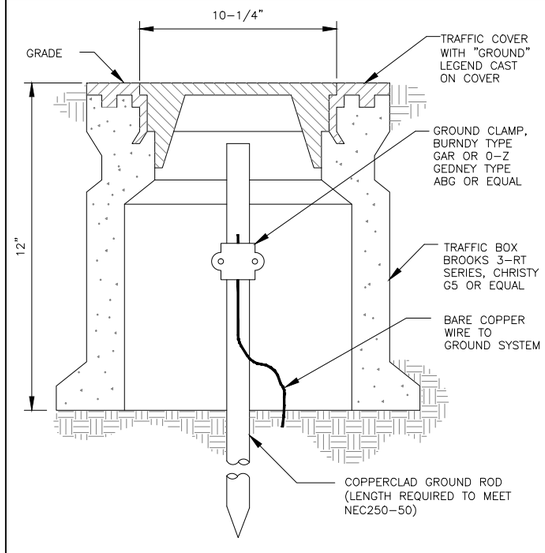

8 GROUND WELL AND ROD DETAIL

N.T.S.

FOR SAMPLE ONLY

RECORD DRAWINGS

REVISIONS DRAWN BY: XX DATE: XX/XX/XX

THESE RECORD DRAWINGS HAVE BEEN PREPARED, IN PART, ON THE BASIS OF INFORMATION COMPILED BY OTHERS. THEY ARE NOT INTENDED TO REPRESENT IN DETAIL THE EXACT LOCATION, TYPE OF COMPONENT NOR MANNER OF CONSTRUCTION. THE ENGINEER WILL NOT BE RESPONSIBLE FOR ANY ERRORS OR OMISSIONS WHICH HAVE BEEN INCORPORATED INTO THE RECORD DRAWINGS.

EXAMPLE

FOR SEALS AND SIGNATURES

(PROJECT NAME)
INSTRUMENTATION & CONTROLS

ELECTRICAL DETAILS

DESCHUTES COUNTY, OREGON

REVISIONS:

(CONSULTANT ENGINEER NAME, ADDRESS & PHONE NUMBER)

DESIGNED BY: XXX
DRAWN BY: XXX
SCALE: NONE
FILE: E-006.dwg
DATE:

VERIFY SCALES
0 1"
BAR EQUALS ONE INCH ON ORIGINAL DRAWING

SHEET:
E-006

COB # (XXXXXX)

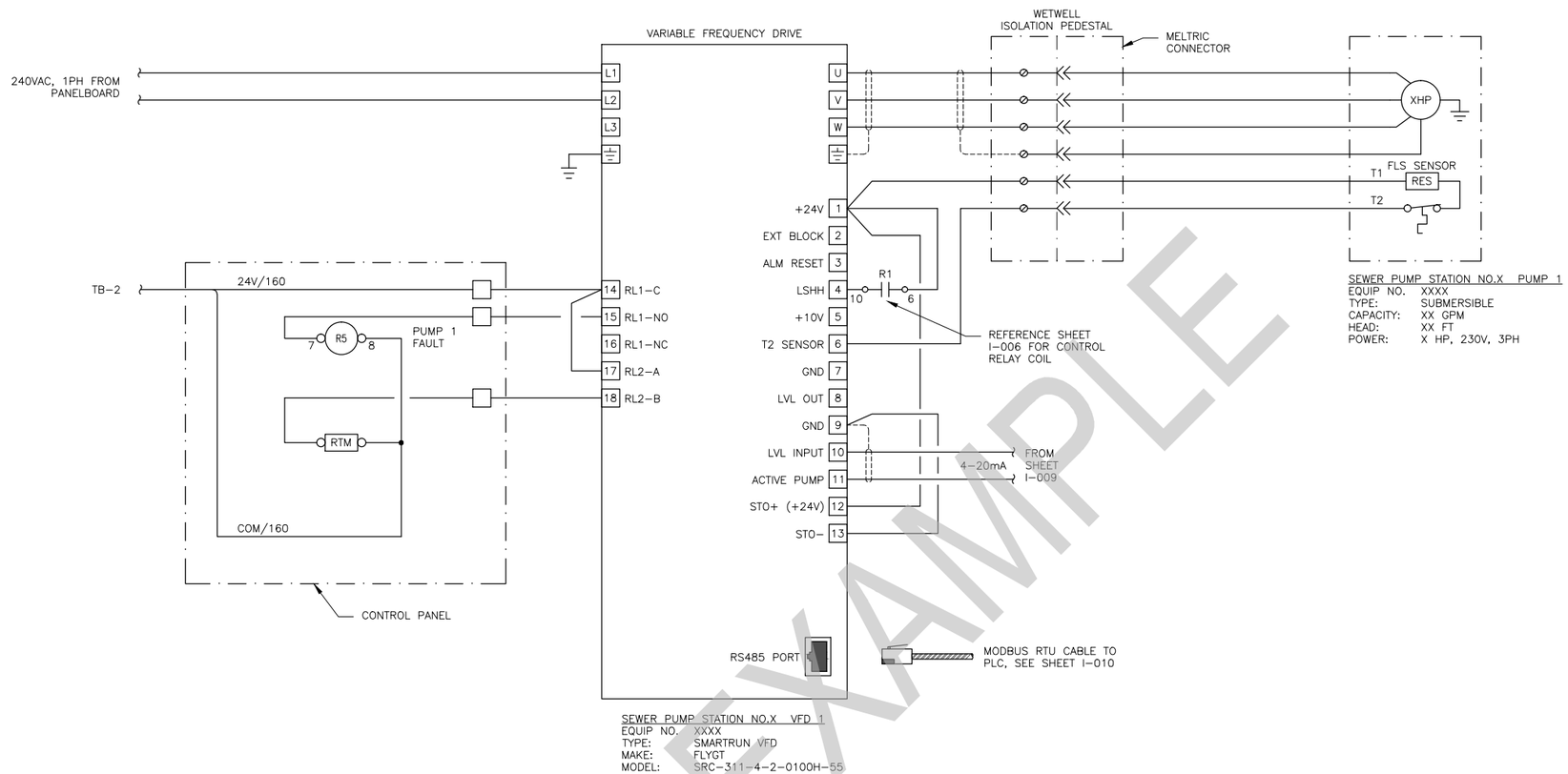

EXAMPLE

FOR SAMPLE ONLY

RECORD DRAWINGS

REVISIONS DRAWN BY: XX DATE: XX/XX/XX

THESE RECORD DRAWINGS HAVE BEEN PREPARED, IN PART, ON THE BASIS OF INFORMATION COMPILED BY OTHERS. THEY ARE NOT INTENDED TO REPRESENT IN DETAIL THE EXACT LOCATION, TYPE OF COMPONENT NOR MANNER OF CONSTRUCTION. THE ENGINEER WILL NOT BE RESPONSIBLE FOR ANY ERRORS OR OMISSIONS WHICH HAVE BEEN INCORPORATED INTO THE RECORD DRAWINGS.

FOR SEALS AND SIGNATURES

(PROJECT NAME)
SEWER PUMNP STATION NO. X

PUMP 1 WIRING DIAGRAM

DESCHUTES COUNTY, OREGON

REVISIONS:

(CONSULTANT ENGINEER NAME, ADDRESS & PHONE NUMBER)

DESIGNED BY: XXX
DRAWN BY: XXX
SCALE: NONE
FILE: E-007.dwg
DATE:

VERIFY SCALES
0 1"
BAR EQUALS ONE INCH ON ORIGINAL DRAWING

SHEET:
E-007

COB # (XXXXXX)

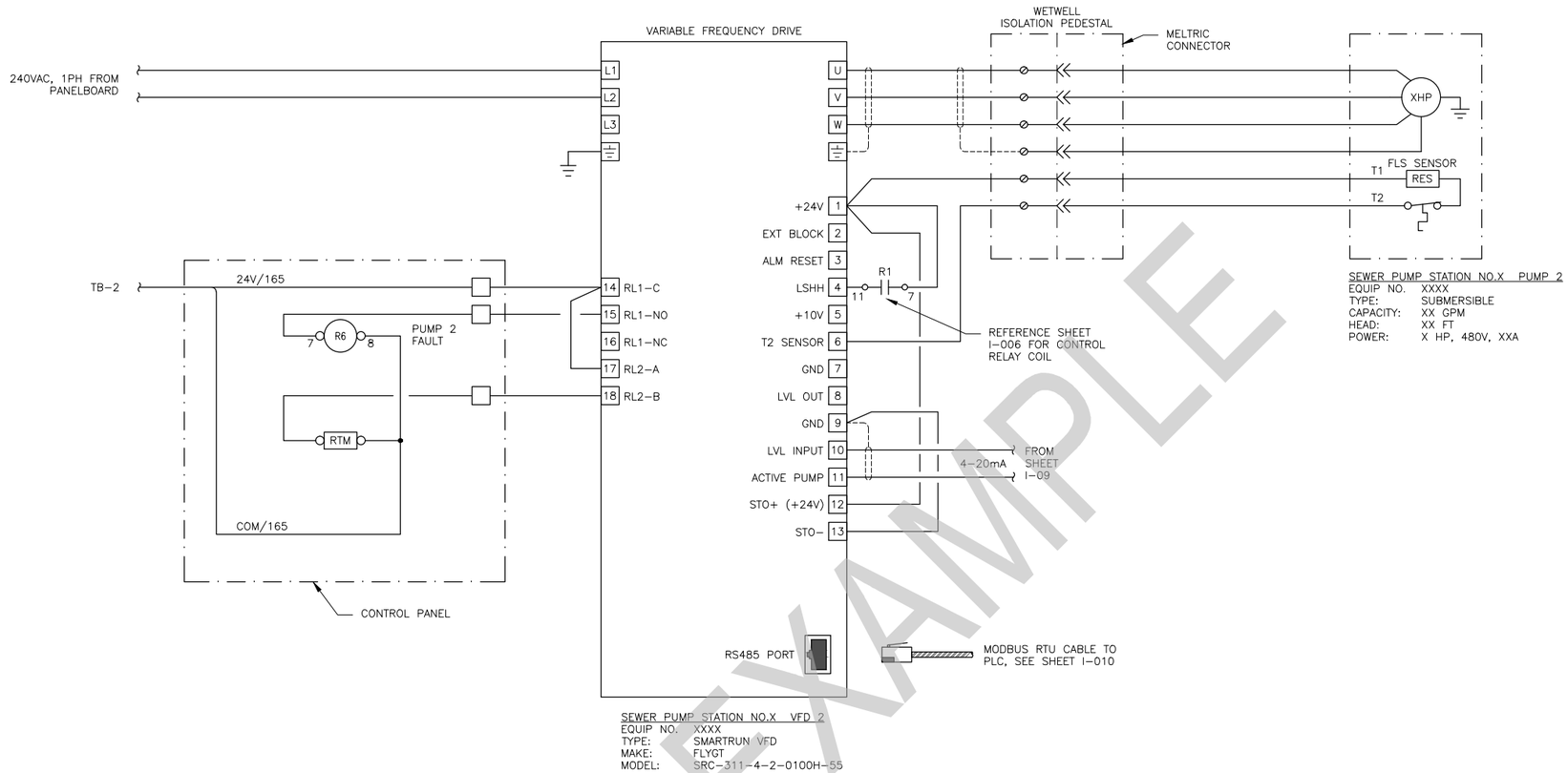

EXAMPLE

FOR SAMPLE ONLY

RECORD DRAWINGS

REVISIONS DRAWN BY: XX DATE: XX/XX/XX

THESE RECORD DRAWINGS HAVE BEEN PREPARED, IN PART, ON THE BASIS OF INFORMATION COMPILED BY OTHERS. THEY ARE NOT INTENDED TO REPRESENT IN DETAIL THE EXACT LOCATION, TYPE OF COMPONENT NOR MANNER OF CONSTRUCTION. THE ENGINEER WILL NOT BE RESPONSIBLE FOR ANY ERRORS OR OMISSIONS WHICH HAVE BEEN INCORPORATED INTO THE RECORD DRAWINGS.

FOR SEALS AND SIGNATURES

(PROJECT NAME)
SEWER PUMP STATION NO. X

PUMP 2 WIRING DIAGRAM

DESCHUTES COUNTY, OREGON

REVISIONS:

(CONSULTANT ENGINEER NAME, ADDRESS & PHONE NUMBER)

DESIGNED BY: XXX
DRAWN BY: XXX
SCALE: NONE
FILE: E-008.dwg
DATE:

VERIFY SCALES
0 1"
BAR EQUALS ONE INCH ON ORIGINAL DRAWING

SHEET:
E-008

COB # (XXXXXX)

FIELD

INSTRUMENT CONTROL PANEL
WXXX–ICP–XXX

SYSTEM CONFIGURATION

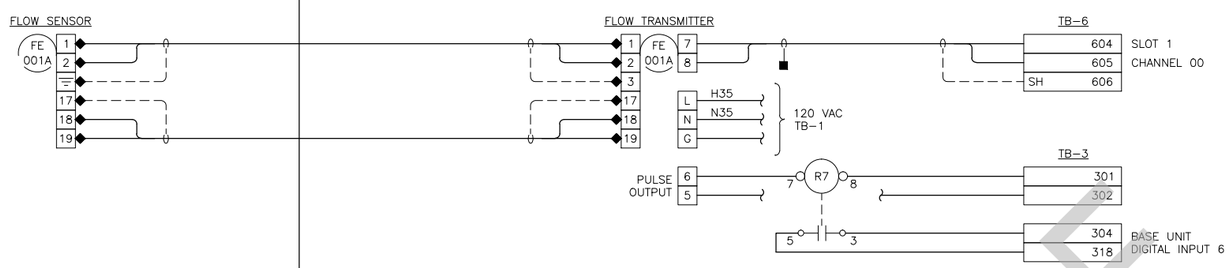

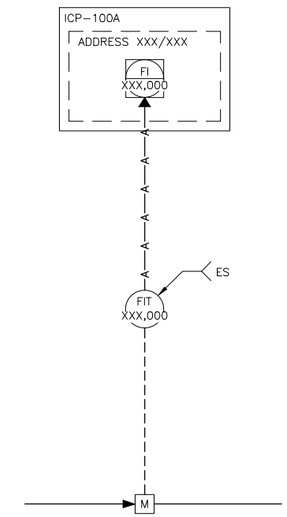

REFERENCES

GENERAL NOTES:

1. USE WIRE NUT TO EXTEND SHIELD TO INSTRUMENT GROUND.

LEGEND:

- ◆ CONTRACTOR TERMINATIONS (12 TERMINATIONS)
- ISOLATION VALVE
- CUT AND TAPE SHIELD

OPERATOR DISPLAY

TAG NAME: WXXX–XXX–XXX–XXX
FUNCTION: PRESSURE INDICATION
SCALE: 0–XXX PSI
ACTION: N/A
GRAPHIC: TBD

EXAMPLE

FOR SAMPLE ONLY

RECORD DRAWINGS

REVISIONS DRAWN BY: XX DATE: XX/XX/XX

THESE RECORD DRAWINGS HAVE BEEN PREPARED, IN PART, ON THE BASIS OF INFORMATION COMPILED BY OTHERS. THEY ARE NOT INTENDED TO REPRESENT IN DETAIL THE EXACT LOCATION, TYPE OF COMPONENT NOR MANNER OF CONSTRUCTION. THE ENGINEER WILL NOT BE RESPONSIBLE FOR ANY ERRORS OR OMISSIONS WHICH HAVE BEEN INCORPORATED INTO THE RECORD DRAWINGS.

FOR SEALS AND SIGNATURES

(PROJECT NAME)
INSTRUMENTATION & CONTROLS
PUMP STATION FLOW LOOP SHEET
DESCHUTES COUNTY, OREGON

REVISIONS:

(CONSULTANT ENGINEER NAME, ADDRESS & PHONE NUMBER)

DESIGNED BY: XXX
DRAWN BY: XXX
SCALE: NONE
FILE: E-009.dwg
DATE:

VERIFY SCALES
0 1"
BAR EQUALS ONE INCH ON ORIGINAL DRAWING

SHEET:
E-009

COB # (XXXXXX)

FIELD

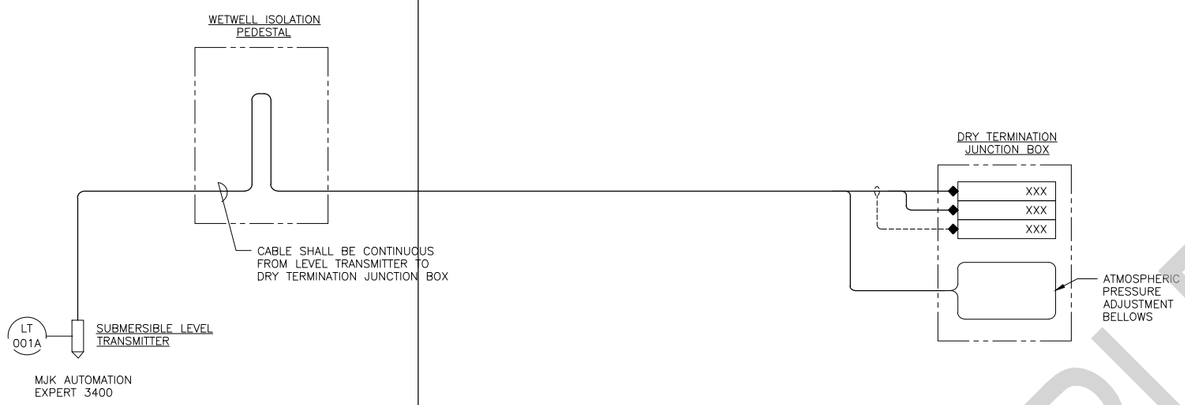

INSTRUMENT CONTROL PANEL
WXXX–ICP–XXX

SYSTEM CONFIGURATION

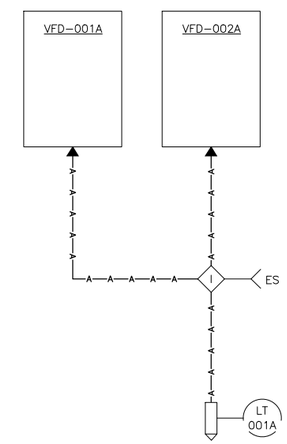

REFERENCES

GENERAL NOTES:

1. USE WIRE NUT TO EXTEND SHIELD TO INSTRUMENT GROUND.

LEGEND:

- ◆ CONTRACTOR TERMINATIONS (3 TERMINATIONS)
- ISOLATION VALVE
- CUT AND TAPE SHIELD

OPERATOR DISPLAY

TAG NAME: WXXX–XXX–XXX–XXX
FUNCTION: LEVEL INDICATION
SCALE: TBD
ACTION: N/A
GRAPHIC: TBD

EXAMPLE

FOR SAMPLE ONLY

RECORD DRAWINGS

REVISIONS DRAWN BY: XX DATE: XX/XX/XX

THESE RECORD DRAWINGS HAVE BEEN PREPARED, IN PART, ON THE BASIS OF INFORMATION COMPILED BY OTHERS. THEY ARE NOT INTENDED TO REPRESENT IN DETAIL THE EXACT LOCATION, TYPE OF COMPONENT NOR MANNER OF CONSTRUCTION. THE ENGINEER WILL NOT BE RESPONSIBLE FOR ANY ERRORS OR OMISSIONS WHICH HAVE BEEN INCORPORATED INTO THE RECORD DRAWINGS.

FOR SEALS AND SIGNATURES

(PROJECT NAME)
INSTRUMENTATION & CONTROLS

WETWELL LEVEL LOOP SHEET

DESCHUTES COUNTY, OREGON

REVISIONS:

(CONSULTANT ENGINEER NAME, ADDRESS & PHONE NUMBER)

DESIGNED BY: XXX
DRAWN BY: XXX
SCALE: NONE
FILE: E-010.dwg
DATE:

VERIFY SCALES
0 1"
BAR EQUALS ONE INCH ON ORIGINAL DRAWING

SHEET:
E-010

COB # (XXXXXX)

FIELD

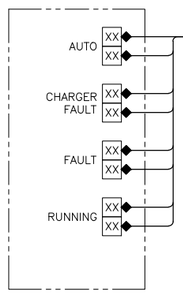

STANDBY GENERATOR X
S015-GEN-001A

INSTRUMENT CONTROL PANEL
WXXX-ICP-XXX

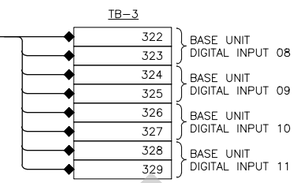

SYSTEM CONFIGURATION

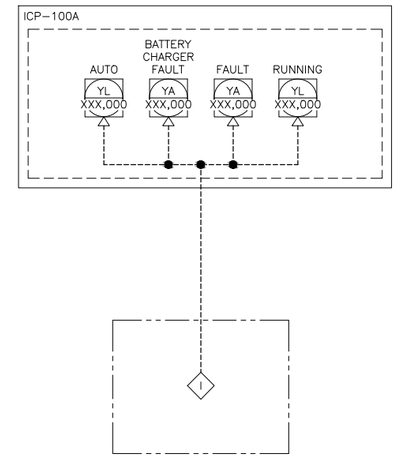

STANDBY GENERATOR X
EQUIP NO: S015-GEN-001A

REFERENCES

GENERAL NOTES:

1. USE WIRE NUT TO EXTEND SHIELD TO INSTRUMENT GROUND.

LEGEND:

- ◆ CONTRACTOR TERMINATIONS (16 TERMINATIONS)
- ISOLATION VALVE
- CUT AND TAPE SHIELD

OPERATOR DISPLAY

TAG NAME: WXXX-XXX-XXX-XXX
FUNCTION: STANDBY GENERATOR AUTO
SCALE: N/A
ACTION: CLOSE WHEN IN AUTO
GRAPHIC: TBD

TAG NAME: WXXX-XXX-XXX-XXX
FUNCTION: BATTERY CHARGER FAULT
SCALE: N/A
ACTION: OPEN ON FAULT CONDITION
GRAPHIC: TBD

TAG NAME: WXXX-XXX-XXX-XXX
FUNCTION: STANDBY GENERATOR FAULT
SCALE: N/A
ACTION: OPEN ON FAULT CONDITION
GRAPHIC: TBD

TAG NAME: WXXX-XXX-XXX-XXX
FUNCTION: STANDBY GENERATOR RUNNING
SCALE: N/A
ACTION: CLOSE ON RUNNING STATUS
GRAPHIC: TBD

FOR SAMPLE ONLY

RECORD DRAWINGS

REVISIONS DRAWN BY: XX DATE: XX/XX/XX

THESE RECORD DRAWINGS HAVE BEEN PREPARED, IN PART, ON THE BASIS OF INFORMATION COMPILED BY OTHERS. THEY ARE NOT INTENDED TO REPRESENT IN DETAIL THE EXACT LOCATION, TYPE OF COMPONENT NOR MANNER OF CONSTRUCTION. THE ENGINEER WILL NOT BE RESPONSIBLE FOR ANY ERRORS OR OMISSIONS WHICH HAVE BEEN INCORPORATED INTO THE RECORD DRAWINGS.

EXAMPLE

FOR SEALS AND SIGNATURES

(PROJECT NAME)
INSTRUMENTATION & CONTROLS
STANDBY GENERATOR LOOP SHEET
DESCHUTES COUNTY, OREGON

REVISIONS:

(CONSULTANT ENGINEER NAME, ADDRESS & PHONE NUMBER)

DESIGNED BY: XXX
DRAWN BY: XXX
SCALE: NONE
FILE: E-011.dwg
DATE:

VERIFY SCALES
0 1"
BAR EQUALS ONE INCH ON ORIGINAL DRAWING

SHEET:
E-011

COB # (XXXXXX)

FIELD

INSTRUMENT CONTROL PANEL
WXXX–ICP–XXX

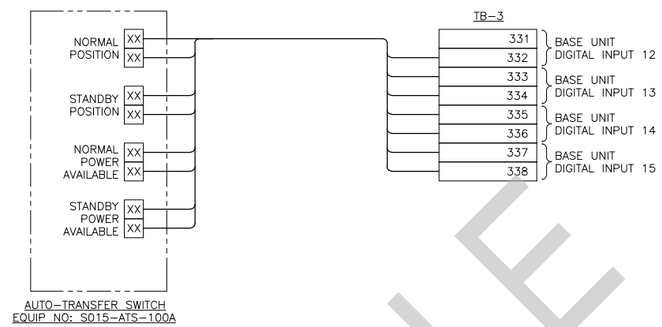

SYSTEM CONFIGURATION

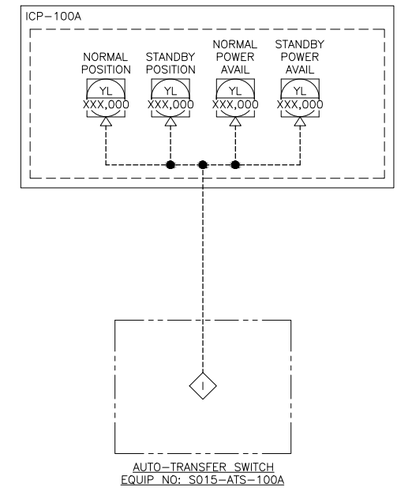

REFERENCES

GENERAL NOTES:

1. USE WIRE NUT TO EXTEND SHIELD TO INSTRUMENT GROUND.

LEGEND:

- ◆ CONTRACTOR TERMINATIONS (0 TERMINATIONS)
- ISOLATION VALVE
- CUT AND TAPE SHIELD

OPERATOR DISPLAY

TAG NAME: WXXX–XXX–XXX–XXX
FUNCTION: ATS NORMAL POSITION
SCALE: N/A
ACTION: CLOSE WHEN IN NORMAL POSITION
GRAPHIC: TBD

TAG NAME: WXXX–XXX–XXX–XXX
FUNCTION: ATS STANDBY POSITION
SCALE: N/A
ACTION: CLOSE WHEN IN STANDBY POSITION
GRAPHIC: TBD

TAG NAME: WXXX–XXX–XXX–XXX
FUNCTION: NORMAL POWER AVAILABLE
SCALE: N/A
ACTION: CLOSE WHEN NORMAL POWER AVAILABLE
GRAPHIC: TBD

TAG NAME: WXXX–XXX–XXX–XXX
FUNCTION: STANDBY POWER AVAILABLE
SCALE: N/A
ACTION: CLOSE WHEN STANDBY POWER AVAILABLE
GRAPHIC: TBD

FOR SAMPLE ONLY

RECORD DRAWINGS

REVISIONS DRAWN BY: XX DATE: XX/XX/XX

THESE RECORD DRAWINGS HAVE BEEN PREPARED, IN PART, ON THE BASIS OF INFORMATION COMPILED BY OTHERS. THEY ARE NOT INTENDED TO REPRESENT IN DETAIL THE EXACT LOCATION, TYPE OF COMPONENT NOR MANNER OF CONSTRUCTION. THE ENGINEER WILL NOT BE RESPONSIBLE FOR ANY ERRORS OR OMISSIONS WHICH HAVE BEEN INCORPORATED INTO THE RECORD DRAWINGS.

EXAMPLE

FOR SEALS AND SIGNATURES

(PROJECT NAME)
INSTRUMENTATION & CONTROLS
AUTO-TRANSFER SWITCH LOOP SHEET
DESCHUTES COUNTY, OREGON

REVISIONS:

(CONSULTANT ENGINEER NAME, ADDRESS & PHONE NUMBER)

DESIGNED BY: XXX
DRAWN BY: XXX
SCALE: NONE
FILE: E-012.dwg
DATE:

VERIFY SCALES
0 1"
BAR EQUALS ONE INCH ON ORIGINAL DRAWING

SHEET:
E-012

COB # (XXXXXX)

FIELD	INSTRUMENT CONTROL PANEL WXXX–ICP–XXX	SYSTEM CONFIGURATION

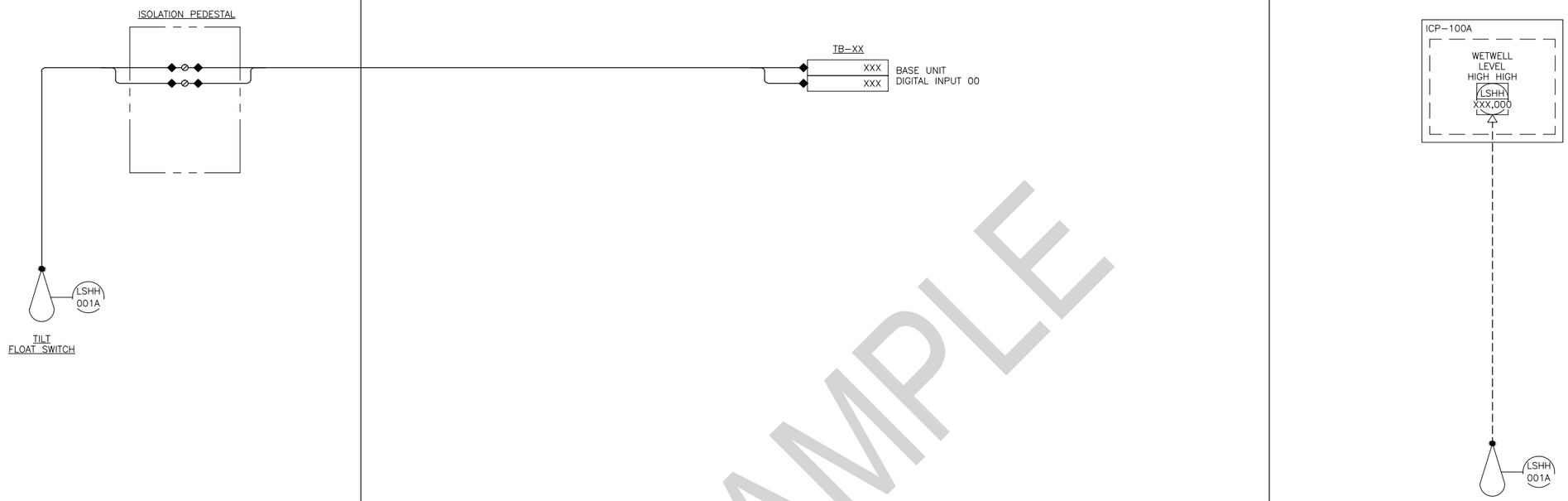

EXAMPLE

REFERENCES

GENERAL NOTES:

1. USE WIRE NUT TO EXTEND SHIELD TO INSTRUMENT GROUND.

LEGEND:

- ◆ CONTRACTOR TERMINATIONS (6 TERMINATIONS)
- ISOLATION VALVE
- CUT AND TAPE SHIELD

OPERATOR DISPLAY

TAG NAME: WXXX–XXX–XXX–XXX
FUNCTION: WETWELL LEVEL HIGH HIGH
SCALE: N/A
ACTION: CLOSE ON HIGH HIGH
GRAPHIC: TBD

FOR SAMPLE ONLY

RECORD DRAWINGS

REVISIONS DRAWN BY: XX DATE: XX/XX/XX

THESE RECORD DRAWINGS HAVE BEEN PREPARED, IN PART, ON THE BASIS OF INFORMATION COMPILED BY OTHERS. THEY ARE NOT INTENDED TO REPRESENT IN DETAIL THE EXACT LOCATION, TYPE OF COMPONENT NOR MANNER OF CONSTRUCTION. THE ENGINEER WILL NOT BE RESPONSIBLE FOR ANY ERRORS OR OMISSIONS WHICH HAVE BEEN INCORPORATED INTO THE RECORD DRAWINGS.

FOR SEALS AND SIGNATURES

(PROJECT NAME)
INSTRUMENTATION & CONTROLS
WETWELL HIGH HIGH LEVEL LOOP SHEET
DESCHUTES COUNTY, OREGON

REVISIONS:

(CONSULTANT ENGINEER NAME, ADDRESS & PHONE NUMBER)

DESIGNED BY: XXX
DRAWN BY: XXX
SCALE: NONE
FILE: E-013.dwg
DATE:

VERIFY SCALES
0 1"
BAR EQUALS ONE INCH ON ORIGINAL DRAWING

SHEET:
E-013

COB # (XXXXXX)

FIELD

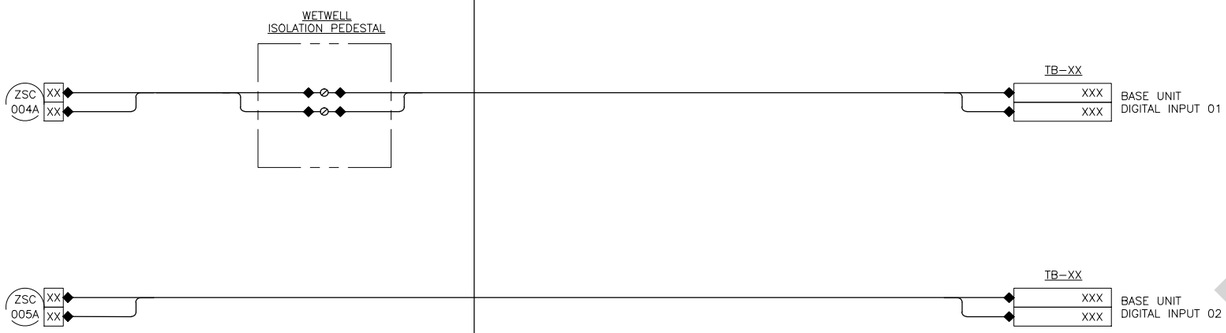

INSTRUMENT CONTROL PANEL
WXXX-ICP-XXX

SYSTEM CONFIGURATION

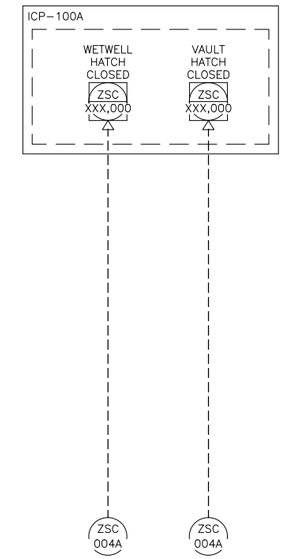

REFERENCES

GENERAL NOTES:

1. USE WIRE NUT TO EXTEND SHIELD TO INSTRUMENT GROUND.

LEGEND:

◆ CONTRACTOR TERMINATIONS (12 TERMINATIONS)

ISOLATION VALVE

CUT AND TAPE SHIELD

OPERATOR DISPLAY

TAG NAME: WXXX-XXX-XXX-XXX
FUNCTION: WETWELL HATCH CLOSED
SCALE: N/A
ACTION: CLOSE WHEN HATCH IS CLOSED
GRAPHIC: TBD

TAG NAME: WXXX-XXX-XXX-XXX
FUNCTION: VAULT HATCH CLOSED
SCALE: N/A
ACTION: CLOSE WHEN HATCH IS CLOSED
GRAPHIC: TBD

EXAMPLE

FOR SAMPLE ONLY

RECORD DRAWINGS

REVISIONS DRAWN BY: XX DATE: XX/XX/XX

THESE RECORD DRAWINGS HAVE BEEN PREPARED, IN PART, ON THE BASIS OF INFORMATION COMPILED BY OTHERS. THEY ARE NOT INTENDED TO REPRESENT IN DETAIL THE EXACT LOCATION, TYPE OF COMPONENT NOR MANNER OF CONSTRUCTION. THE ENGINEER WILL NOT BE RESPONSIBLE FOR ANY ERRORS OR OMISSIONS WHICH HAVE BEEN INCORPORATED INTO THE RECORD DRAWINGS.

FOR SEALS AND SIGNATURES

(PROJECT NAME)
INSTRUMENTATION & CONTROLS

HATCH INTRUSION LOOP SHEET

DESCHUTES COUNTY, OREGON

REVISIONS:

(CONSULTANT ENGINEER NAME, ADDRESS & PHONE NUMBER)

DESIGNED BY: XXX
DRAWN BY: XXX
SCALE: NONE
FILE: E-014.dwg
DATE:

VERIFY SCALES
0 1"
BAR EQUALS ONE INCH ON ORIGINAL DRAWING

SHEET:
E-014

COB # (XXXXXX)

SHEET X OF X

FIELD

INSTRUMENT CONTROL PANEL
WXXX–ICP–XXX

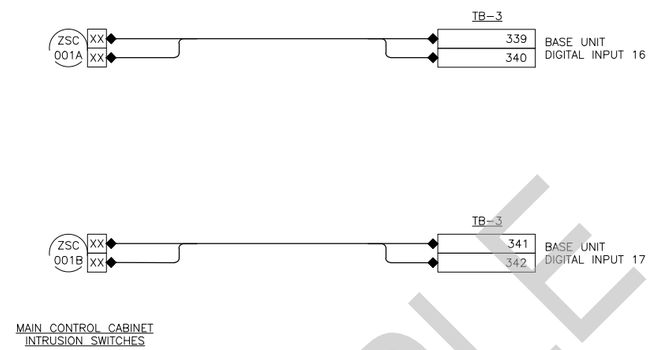

SYSTEM CONFIGURATION

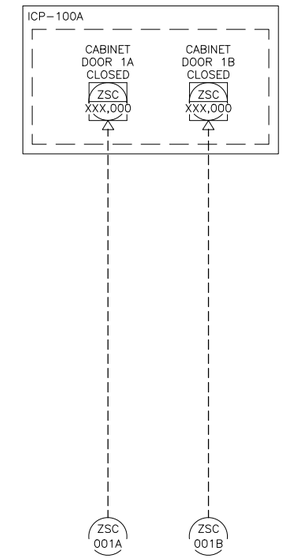

REFERENCES

GENERAL NOTES:

1. USE WIRE NUT TO EXTEND SHIELD TO INSTRUMENT GROUND.

LEGEND:

◆ CONTRACTOR TERMINATIONS (0 TERMINATIONS)

ISOLATION VALVE

CUT AND TAPE SHIELD

OPERATOR DISPLAY

TAG NAME: WXXX–XXX–XXX–XXX
FUNCTION: MAIN CONTROL CABINET DOOR 1A CLOSED
SCALE: N/A
ACTION: CLOSE WHEN DOOR IS CLOSED
GRAPHIC: TBD

TAG NAME: WXXX–XXX–XXX–XXX
FUNCTION: MAIN CONTROL CABINET DOOR 1B CLOSED
SCALE: N/A
ACTION: CLOSE WHEN DOOR IS CLOSED
GRAPHIC: TBD

EXAMPLE

FOR SAMPLE ONLY

RECORD DRAWINGS

REVISIONS DRAWN BY: XX DATE: XX/XX/XX

THESE RECORD DRAWINGS HAVE BEEN PREPARED, IN PART, ON THE BASIS OF INFORMATION COMPILED BY OTHERS. THEY ARE NOT INTENDED TO REPRESENT IN DETAIL THE EXACT LOCATION, TYPE OF COMPONENT NOR MANNER OF CONSTRUCTION. THE ENGINEER WILL NOT BE RESPONSIBLE FOR ANY ERRORS OR OMISSIONS WHICH HAVE BEEN INCORPORATED INTO THE RECORD DRAWINGS.

FOR SEALS AND SIGNATURES

(PROJECT NAME)
INSTRUMENTATION & CONTROLS
MAIN CONTROL CAB INTRUSION LOOP SHEET
DESCHUTES COUNTY, OREGON

REVISIONS:

(CONSULTANT ENGINEER NAME, ADDRESS & PHONE NUMBER)

DESIGNED BY: XXX
DRAWN BY: XXX
SCALE: NONE
FILE: E-015.dwg
DATE:

VERIFY SCALES
0 1"
BAR EQUALS ONE INCH ON ORIGINAL DRAWING

SHEET:
E-015

COB # (XXXXXX)