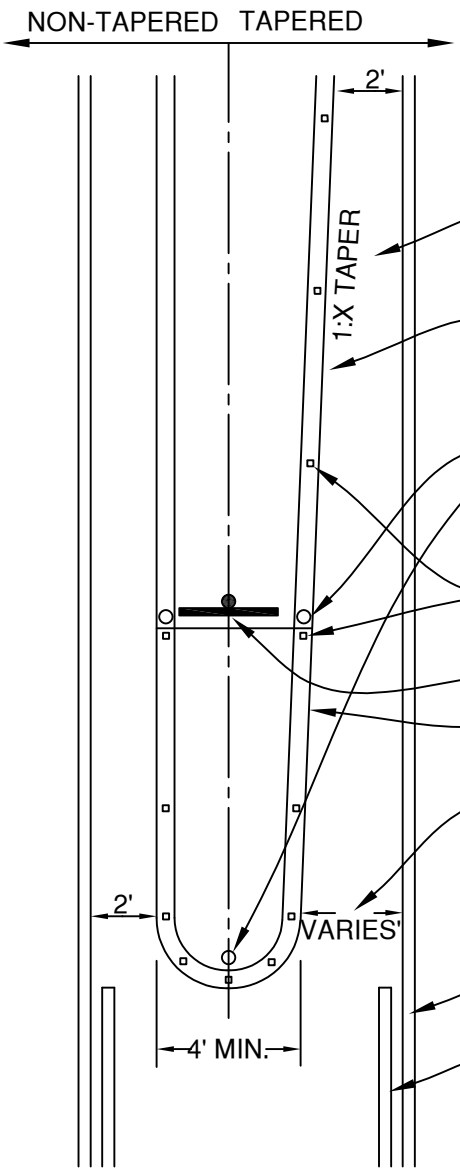

TAPER RATIO IS EQUAL TO POSTED SPEED
EX: 1:25 (X=MPH)

STD. MOUNTABLE CURB PER R-3

INSTALL 36" YELLOW FLEXSTAKE TM 750, OR APPROVED EQUAL, WITH TWO REFLECTIVE STRIPS ON THE END OF THE BULLNOSE AND WHERE THE MEDIAN BEGINS USING CONCRETE ANCHOR (REDHEAD OR EQUIVALENT)

INSTALL YELLOW RAISED RETROREFLECTIVE PAVEMENT MARKERS (5 MIN) AT 3' MAX SPACING AROUND MEDIAN NOSE AND AT 15' SPACING TO AND BEYOND TAPER SECTION AS SHOWN

INSTALL POST WITH FLEXIBLE BASE AND R4-7 SIGN (24" X 30");

RETROREFLECTIVE YELLOW CURB MARKING ON TOP OF CURB TO SAME LIMITS AS RETROREFLECTIVE MARKERS

VARIES WITH APPROACH SPEED
- 3' FOR 25 MPH MIN
- 4' FOR 35 MPH MIN
- 4' FOR 45 MPH MIN

4" SOLID YELLOW STRIPE

4" SOLID YELLOW STRIPE

PLAN VIEW

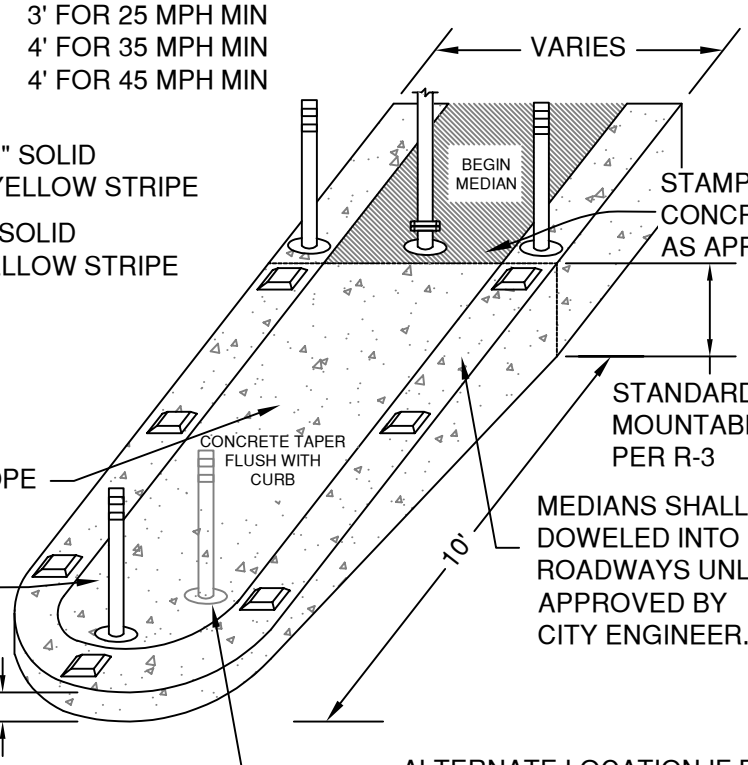

STAMPED CONCRETE OR AS APPROVED

STANDARD MOUNTABLE CURB PER R-3

ISLAND NOSE 1:10 SLOPE

MEDIANS SHALL NOT BE DOWELED INTO ROADWAYS UNLESS APPROVED BY CITY ENGINEER.

GRAY BROOM FINISHED CONCRETE. 6" THICKNESS.

1" CURB REVEAL AT END OF BULLNOSE

ALTERNATE LOCATION IF R1-6A IN STREET PEDESTRIAN CROSSING SIGN IS INSTALLED AT MARKED CROSSWALK

ISOMETRIC VIEW

DRAWN AJD	CITY OF BEND	CITY OF BEND STANDARD DRAWING 710 NW WALL ST., BEND, OREGON 97701	SCALE NTS
DIV ROADWAY			DATE 11/01/2024
REV / DATE			APPR
		MEDIAN / ISLAND END DETAIL	STD DWG R-25