BEND MIDTOWN PEDESTRIAN AND BICYCLE CROSSINGS FEASIBILITY STUDY

DATE: August 10, 2022

TO: Garrett Sabourin, PE | City of Bend

FROM: Alex Correa, EIT; Kayla Fleskes, PE | DKS Associates

SUBJECT: Bend Midtown Crossing Study
Multimodal Traffic Analysis

Project #22047-000

The following memorandum documents traffic impacts associated with a proposed pedestrian and cyclist bridge crossing of US 97 and the Burlington Northern and Santa Fe (BNSF) railroad via NW/NE Hawthorne Avenue for the Bend Midtown Crossings Feasibility Study. Figure 1 below shows the study area, proposed bridge location, and study intersections for this analysis.

FIGURE 1: STUDY AREA AND STUDY INTERSECTIONS

This memorandum is organized in the following sections:

- **Methodology and Assumptions –** documents methods used for collecting counts, developing existing volumes, forecasting future year (2026) traffic volumes, developing analysis scenarios, and analyzing intersection operations.
- **Safety** – documents existing safety data and future safety impacts that may result from the proposed crossing.
- **Corridor Operations –** documents intersection operations and queuing impacts along Hawthorne Avenue for the analysis scenarios, including intersection treatments analysis for the two intersections nearest the proposed Hawthorne Avenue bridge (NW Hill Street on the west side and either 1st Street or 2nd Street on the east side).
- **Circulation Impacts** – documents existing circulation conditions and future impacts to circulation for people driving, walking, and biking for future build scenarios to understand how potential improvements along Franklin Avenue, Hawthorne Avenue and Greenwood Avenue could function as a system.

METHODOLOGY AND ASSUMPTIONS

BRIDGE ALTERNATIVES AND ANALYSIS SCENARIOS

The Midtown Crossings project team has developed three preliminary alternatives for the proposed Hawthorne Avenue bridge over US 97. Detailed plan, cross section, and profile drawings for each preliminary concept are included in the appendix. Concepts will continue to be refined during the project process. Table 1 includes a summary of key attributes for the three preliminary concepts of the Hawthorne Avenue bridge.

TABLE 1: HAWTHORNE AVENUE BRIDGE ALTERNATIVE PRELIMINARY CONCEPT SUMMARY

CONCEPT NUMBER	WEST LANDING	EAST LANDING	MAXIMUM SLOPE
1	Just east of NW Hill Street	Mid-block between NE 1st Street & 2nd Street	7.5%
2	Just east of NW Hill Street	Mid-block between NE 1st Street & 2nd Street	4.5%
3	Just west of US 97	Just west of NE 1st Street	N/A

Concept 1 includes intermittent landings to provide refuge from the 7.5 percent slope and Concept 2 includes switchbacks to accommodate the 4.5 percent slope. Concept 3 has no maximum ramp slope because it provides access to the Hawthorne Avenue bridge via elevators and stairs.

Each concept will include eliminating eastbound traffic on NW Hawthorne Avenue, between NW Hill Street and US 97, as well as the access to southbound US 97. Each concept will maintain two-way

automobile traffic while adding a two-way bikeway and widened sidewalk on NE Hawthorne Avenue between NE 1st Street and NE 2nd Street. Notably, because Concept 3 includes an eastern landing west of NE 1st Street, people walking and biking will interact with the NE Hawthorne Ave/NE 1st Street intersection in Concept 3, but not in Concepts 1 and 2.

The three concepts have similar impacts on motor vehicle circulation. As such, only one set of "build" and "no build" scenarios is analyzed for motor vehicle operations and circulation impacts along NW/NE Hawthorne Avenue:

- **No Build** – Maintain the existing configuration along NW/NE Hawthorne Avenue.
- **Build** – Close access to US 97 southbound via NW Hawthorne Avenue by eliminating the eastbound lane on NW Hawthorne Avenue between NW Hill Street and US 97. This is consistent with projects identified in the US 97 Parkway Plan[1] and City of Bend Transportation System Plan (TSP)[2].

TRAFFIC COUNTS

New turning movement traffic counts were collected for the weekday p.m. peak period (4:00-6:00 p.m.) in March 2022 at the following study intersections:

- NW Harriman Street/NW Hawthorne Avenue
- NW Hill Street/NW Hawthorne Avenue
- US 97/NW Hawthorne Avenue
- NE 1st Street/NE Hawthorne Avenue
- NE 2nd Street/NE Hawthorne Avenue

72-hour speed and vehicle classification counts were also conducted along NW Hawthorne Avenue just west of NW Hill Street and just east of NW Hill Street. A summary of the 72-hour speed and classification data is shown in Table 2. The raw counts are attached in the appendix.

TABLE 2: VEHICLE SPEED AND CLASSIFICATION DATA SUMMARY

LOCATION	AVERAGE SPEED (MPH)*	85TH PERCENTILE SPEED (MPH)*	AVERAGE DAILY TRAFFIC VOLUME*
WEST OF HILL STREET	22	25	7,066
EAST OF HILL STREET	17	23	4,851

*Values shown are averages over the three-day collection period.

[1] US 97 Parkway Plan Phase 2, February 2021.

[2] City of Bend Transportation System Plan, Adopted 2020.

TRAFFIC VOLUME DEVELOPMENT AND FORECASTING

Existing year traffic volumes were developed by balancing the raw counts and adjusting the counts at US 97/NW Hawthorne Avenue to the 30th Highest Annual Hour of traffic (30HV) using the nearby automatic traffic recorder (ATR) method, as documented in the Oregon Department of Transportation (ODOT) Analysis Procedures Manual[3].

The 30HV adjustment factor was determined by averaging the adjustment factors for the two nearest ATRs to the study area (ATR 09-007 & ATR 09-009), both along US 97 north of the study area. ATR 09-009 is just south of the US 97/NW Onley Avenue intersection (0.60 miles north of US 97/NW Hawthorne Avenue) and ATR 09-007 is along the frontage of the Bend River Mall (2 miles north of US 97/NW Hawthorne Avenue). The final 30HV factor was determined to be 1.16. This factor was first applied to the US 97/NW Hawthorne Avenue intersection, then the additional volume added was distributed throughout the adjacent system based on the proportions of each given movement at an intersection leg in the raw counts. No adjustments were made to the study intersections counts on the east side of US 97.

The adjusted counts were then forecast to year 2026 (the assumed year of opening) using the Bend Redmond Regional Travel Demand Model (BRM) and a 2028 Committed Scenario developed for the City of Bend's TSP update. Two volume sets were developed: a No Build and a Build. The Build volume set included a closure of the eastbound right turn onto the Parkway at US 97/NW Hawthorne Avenue, as this was included in each of the three bridge alternatives.

Using the volume development methodologies and the analysis scenarios discussed, a 2026 forecast set of volumes was developed for both analysis scenarios. The 2026 No Build and Build volumes are shown in Figures 2 and 3 below.

[3] Chapter 5, ODOT Analysis Procedures Manual, Updated June 2022.

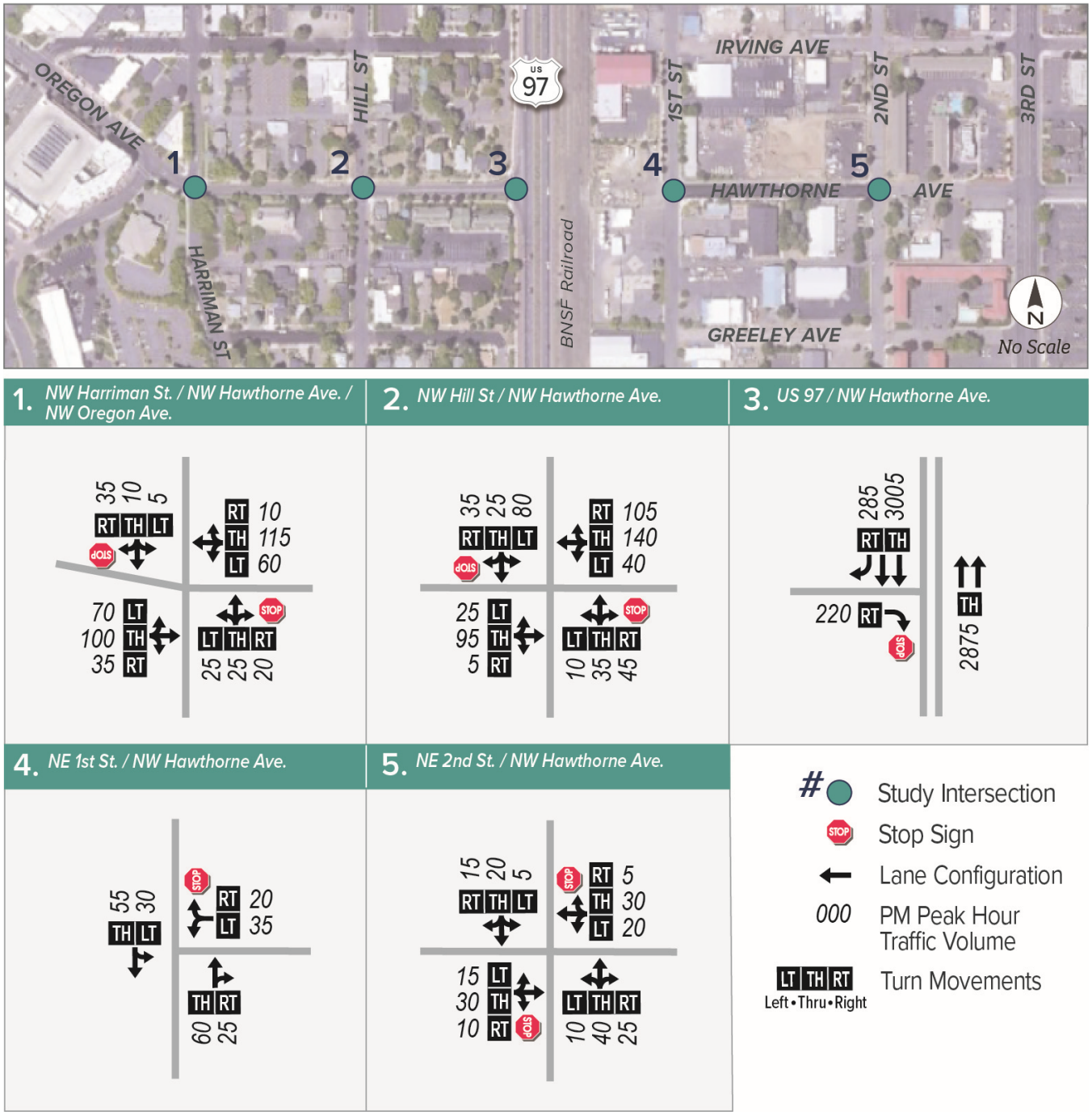

FIGURE 2: NO BUILD SCENARIO WEEKDAY P.M. PEAK HOUR VOLUMES (2026)

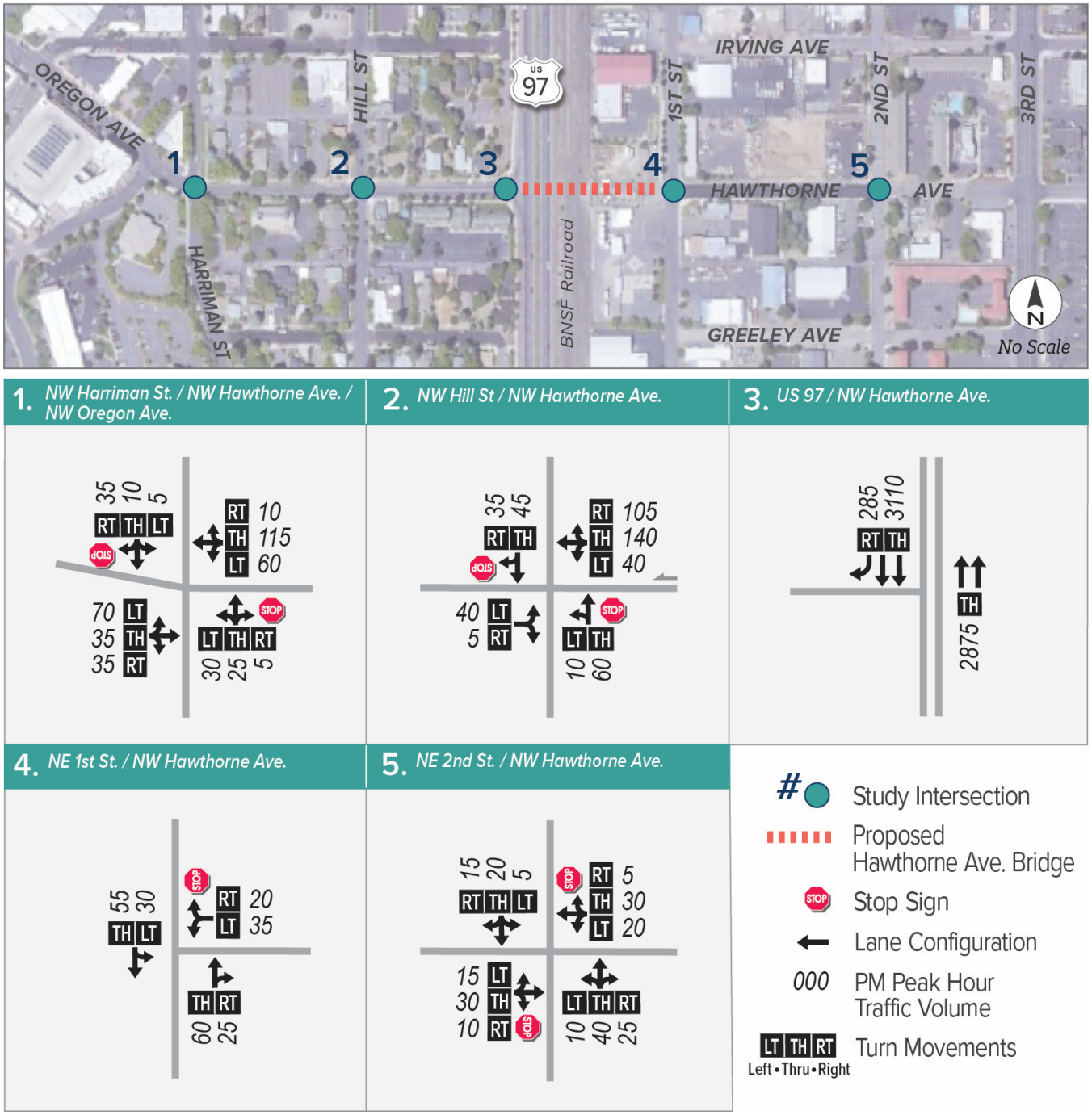

FIGURE 3: BUILD SCENARIO WEEKDAY P.M. PEAK HOUR VOLUMES (2026)

INTERSECTION OPERATIONS METHODOLOGY

Intersection operations were analyzed in Synchro software using Highway Capacity Manual 6th Edition methodology. Queuing analysis using SimTraffic was conducted at each study intersection using 10 simulated runs for the analysis scenarios.

Intersection operations performance measures used for this analysis include volume-to-capacity (v/c) ratios, seconds of control delay, and level of service (LOS). Intersection operations results were compared to City and ODOT mobility targets, which include:

- **City of Bend:** Less than 50 seconds of average delay at two-way stop-controlled intersections for approaches with more than 100 vehicles per hour[4].
- **ODOT:** Volume-to-capacity ratio less than or equal to 0.85[5] for statewide expressways within a metropolitan planning organization boundary, such as US 97 in the project area.

Intersection queuing performance measures used for this analysis include average queue length and 95th percentile queue length. The average queue length represents the length from the stop bar to the end of the average queue at an intersection approach. The 95th percentile queue length represents a queue with only a five percent probability of being exceeded, which is typically used as a reasonable design criterion.

SAFETY

CRASH ANALYSIS

Crash data for the most recent five years of data available (2016-2020) was obtained for each of the study intersections. While 2020 data was included in this data set, it should be noted that across Oregon, total crashes were down significantly due to reduced driving and changes in travel patterns related to the COVID-19 pandemic. Crash rates were calculated at each intersection. The intersection crash rates were compared to the 90th percentile crash rate for similar intersections in Oregon[6]. Intersections that had observed crash rates greater than the 90th percentile crash rate were flagged for safety concerns. Tables 3 and 4 below summarize the crashes by severity and provides a comparison of the 90th percentile crash rate at similar intersections in Oregon to the actual crash rate.

As shown in Table 3, no fatal or serious injury crashes were reported during the period analyzed. The US 97/NW Hawthorne Avenue intersection was the location of the most crashes of the study intersections and the crash rate exceeded the 90th percentile crash rate for similar intersection types in Oregon. Ninety-five percent of crashes reported at the US 97/NW Hawthorne Avenue

[4] City of Bend Development Code 4.7.500.

[5] Table 6, 1999 Oregon Highway Plan, Updated August 2015.

[6] Exhibit 4-1, Chapter 4, ODOT Analysis Procedures Manual, Updated June 2022.

intersection were either rear end or turning movement crashes. Less than one crash per year was reported at each of the other study intersections.

TABLE 3: 2016-2020 SEVERITY OF CRASHES AT STUDY INTERSECTIONS

INTERSECTION	FATAL	SERIOUS INJURY	MINOR INJURY	POSSIBLE INJURY	PROPERTY DAMAGE ONLY	TOTAL
NW HARRIMAN STREET/NW HAWTHORNE AVENUE	0	0	0	0	3	**3**
NW HILL STREET/NW HAWTHORNE AVENUE	0	0	0	1	3	**4**
US 97/NW HAWTHORNE AVENUE	0	0	3	19	22	**44**
NE 1ST STREET/NE HAWTHORNE AVENUE	0	0	0	0	0	**0**
NE 2ND STREET/NE HAWTHORNE AVENUE	0	0	0	0	0	**0**

TABLE 4: 2016-2020 CRASH RATE SUMMARY

INTERSECTION	TOTAL CRASHES	OBSERVED CRASH RATE [A]	90TH PERCENTILE CRASH RATE [A]
NW HARRIMAN STREET/NW HAWTHORNE AVENUE	3	0.35	0.408
NW HILL STREET/NW HAWTHORNE AVENUE	4	0.36	0.408
US 97/NW HAWTHORNE AVENUE	44 [C]	**0.39**	0.293 [B]
NE 1ST STREET/NE HAWTHORNE AVENUE	0	0.00	0.293
NE 2ND STREET/NE HAWTHORNE AVENUE	0	0.00	0.408

Bold and red: Crash rate over the 90th percentile crash rate.

[A] Crash rates are shown in number of crashes per million entering vehicles (MEV)

[B] 90th percentile crash rate shown is inclusive of all urban 3-leg intersections in Oregon and not specific to expressways such as US 97.

[C] 13 crashes occur EB/WB on NW Hawthorne Avenue, 31 crashes occur SB on US 97

BUILD SCENARIO SAFETY CONDITIONS

Implementation of the right-on closure identified in the TSP at US 97/NW Hawthorne Avenue has the potential to significantly reduce crashes at US 97/NW Hawthorne Avenue. By eliminating eastbound vehicular travel on NW Hawthorne Avenue between NW Hill Street and US 97 and extending the deceleration lane for vehicles turning right from US 97 onto NW Hawthorne Avenue, many of the rear end and turning crashes (95 percent of total crashes) at the NW Hawthorne Avenue/US 97 intersection could be prevented. While not being proposed as part of this project, the US 97 Parkway Plan identified the need for extending the southbound right turn deceleration lane.

While no crashes involving people walking or biking occurred between 2016 and 2020 at any of the study intersections, the proposed Hawthorne Avenue bridge would reduce the relative risk to people walking and biking that cross US 97 via either Greenwood Avenue or Franklin Avenue because it provides a means of crossing the Parkway with more separation from motor vehicles than the current undercrossings at Greenwood and Franklin Avenues or the proposed alternatives at Greenwood Avenue and Franklin Avenue. Aligning with the build-out of the proposed Hawthorne Avenue bridge, a large increase in people walking and biking can be expected on the Hawthorne Avenue corridor. Consideration for improvements to the broader Hawthorne Avenue corridor for people walking and biking may be necessary to ensure that a safe environment is created for all users of the corridor.

CORRIDOR OPERATIONS

INTERSECTION OPERATIONS

This section summarizes intersection operations for the two analysis scenarios. As shown in Table 5 below, only the eastbound approach at US 97/NW Hawthorne Avenue in the No Build scenario fails to meet the applicable mobility target.

By removing the NW Hawthorne Avenue entrance to US 97, all the intersections in the Build scenario operate with less than 50 seconds of delay and meet ODOT and City mobility targets. The Build Scenario restricts eastbound traffic from NW Hawthorne Avenue onto US 97, eliminating any conflicting movements at the intersection that cause delay. Due to this, the NW Hawthorne Avenue/US 97 intersection does not have any delay and operates in a free-flow state.

TABLE 5: NO BUILD AND BUILD SCENARIO INTERSECTION OPERATIONS, P.M. PEAK HOUR (2026)

INTERSECTION	MOBILITY TARGET [1]	NO BUILD [2]			BUILD [2]		
		DELAY (SEC)	LOS	V/C	DELAY (SEC)	LOS	V/C
NW HARRIMAN ST & NW OREGON AVE/NW HAWTHORNE AVE	≤50 sec delay	8/15	A/C	0.13/0.18	8/15	A/C	0.10/0.16
NW HILL ST & NW HAWTHORNE AVE	≤50 sec delay	8/16	A/C	0.09/0.33	8/14	A/B	0.04/0.16
US 97 & NW HAWTHORNE AVE	≤0.85 v/c	0/529	A/F	**0.85/1.96**	N/A	N/A	N/A
NE 1ST ST & NE HAWTHORNE AVE	≤50 sec delay	8/10	A/A	0.07/0.09	8/10	A/A	0.07/0.09
NE 2ND ST & NE HAWTHORNE AVE	≤50 sec delay	7/10	A/B	0.05/0.09	7/10	A/B	0.05/0.09

[1] All study intersections are two-way-stop controlled

[2] Results presented as worst performing major approach/worst performing minor approach

Bold and Red: Fails to meet applicable mobility target.

QUEUING

In addition to intersection operations analysis, queuing analysis was conducted at each study intersection for both analysis scenarios. The queueing reports are included in the appendix.

Today, eastbound queues on NW Hawthorne Avenue from the US 97 southbound entrance were observed to extend to NW Hill Street, as shown in Figure 4. Moreover, vehicles traveling on the US 97 mainline were also observed to decelerate either to enter the southbound right turn pocket or in response to aggressive drivers turning onto the Parkway from NW Hawthorne Avenue.

FIGURE 4: EXISTING EASTBOUND HAWTHORNE AVENUE QUEUE AT US 97

With even a limited increase in traffic in the future, the No Build analysis indicates that the average eastbound queue from US 97/NW Hawthorne Avenue could stretch to the NW Oregon Avenue/NW Brooks Street intersection. The queuing associated with the entrance onto US 97 caused a local gridlock, where northbound/southbound queues at NW Hill Street and NW Harriman Street stretch to NW Greenwood Avenue/NW Franklin Avenue. It is likely that this level of queueing would not be realized in the future, as drivers would instead choose other routes to avoid the queuing and congestion or would accept smaller gaps in traffic to turn onto US 97, creating a safety concern. Even so, the queuing analysis reflects the magnitude of the problem that would result from the US 97 access via NW Hawthorne Avenue remaining open and the safety challenges in the future.

Drivers entering US 97 from NW Hawthorne Avenue caused approximately 325 feet of queuing on average (500 feet at the 95th percentile) on the Parkway. This queuing occurs because of vehicles slowing on the mainline prior to entrance to the deceleration lane or slowing in response to aggressive behavior from people driving from NW Hawthorne Avenue onto US 97. As stated above, this action creates a hazard for people driving on US 97 and those entering NE Hawthorne Avenue via US 97. On the east side of US 97, no 95th percentile queuing at any approach at the NE 1st Street or NE 2nd Street intersections were over 75 feet or exceeded storage.

With the removal of the eastbound right turn onto US 97, the queuing and congestion significantly improves under the Build scenario. No individual 95th percentile queue is expected to exceed 100 feet in length and nor were any close to exceeding the available storage.

INTERSECTION TREATMENTS

Intersection treatments at the two intersections nearest to the proposed bridge landings will be a necessary component to implementing any of the proposed Hawthorne Avenue bridge concepts. The two intersections which will require updated treatments are NW Hawthorne Avenue/NW Hill Street at the west landing and NE Hawthorne Avenue/NE 2nd Street (or NE 1st Street for concept 3) at the east landing.

Each concept includes the Hawthorne Avenue bridge landing on the south side of Hawthorne Avenue. As such, a special conflict to manage with intersection treatments will be the interaction between people biking who must cross from the north side of the roadway to the south side to access the bridge and people driving on Hawthorne Avenue.

Treatments at the intersections of the bridge landings could be similar, but the treatment at NW Hill Street will be particularly important due to its proximity to US 97 and higher vehicular volumes. Table 6 below includes opportunities, constraints, a recommendation to advance for further refinement, and justification for the recommendation. While Table 6 includes treatments specific to the NW Hawthorne Avenue/NW Hill Street intersection, these same treatments can be applied to the NE Hawthorne Avenue/NE 2nd Street intersection with context specific modifications. Each treatment is categorized in one of three categories, as follows:

- Advance – DKS recommends that no further analysis is necessary to decide if these treatments are appropriate and should be built alongside the Hawthorne Avenue bridge, and that buildout of these treatments will complement the overall project goals.
- Potentially Advance – DKS recommends that these treatments be considered for further analysis in future phases of the Midtown Crossing project. These treatments may be implemented under the condition that further analysis confirms that it is an appropriate option.
- Do Not Advance – DKS recommends that these treatments not be considered for further analysis in future phases of the Midtown Crossing project.

TABLE 6: NW HAWTHORNE AVENUE/NW HILL STREET POSSIBLE INTERSECTION TREATMENTS

TREATMENT	RECOMM-ENDATION	DESCRIPTION	OPPORTUNITIES	CONSTRAINTS	JUSTIFICATION
LENGTHEN US 97 DECEL-ERATION LANE	Advance pending coordination with ODOT	Increase the deceleration lane length of the US 97 southbound right turn onto Hawthorne Avenue	• Identified as treatment in US 97 Parkway Plan to improve safety at intersection • Provides space for vehicles to decelerate without influencing mainline US 97 traffic • Provides space for vehicles to slow down approaching Hill St to improve safety for people biking to/from the bridge, especially if combined with a change in corner radius at the intersection (could be achieved through a truck apron)	• Would require increased funding	This improvement is identified in the US 97 Parkway Plan and timing of the improvement will need to be coordinated with ODOT. Vehicle interaction with people walking/biking to/from the Hawthorne Avenue bridge on the west side of US 97 will be a challenge regardless of the bridge alternative selected. Vehicles entering the intersection at lower speeds can reduce the risk for higher severity crashes with people walking and biking.
ENHANCE PEDESTRIAN AND BICYCLE FACILITES ON NW HAWTHORNE AVE	Advance	Identify and evaluate broader corridor improvements on Hawthorne Avenue between Downtown/Deschutes River Trail and Juniper Park to help connect people walking and biking to the new Hawthorne Bridge.	• Promotes investment in low stress bike network and key pedestrian facilities • Could reduce need for diagonal biking movements to/from eastern approach (e.g., if a south side two-way bike facility is implemented on Hawthorne Avenue west of Hill Street)	• Increases project footprint • Identify and obtain additional funding	Continuation of the shared use path from the Hawthorne Bridge could prevent the need to move people biking from the south side of Hawthorne Avenue to the north side. This improvement could allow Hawthorne Avenue to remain free-flowing and reduce exposure of people biking to vehicle traffic.
RAISED INTERSECTION	Advance for further consideration	Raised intersection/crosswalk at NW Hawthorne Avenue/Hill Street. Could be implemented with either all-way stop control or maintaining current intersection control.	• Makes people walking/biking more visible to motorists • Could be implemented with other intersection treatments	• Does not eliminate conflict between WB vehicles and people walking and biking to/from the bridge	This flexible solution will increase visibility of people walking/biking and could lead to better yielding from motorists. This solution could also be implemented with a variety of intersection treatments considered for this project.

TREATMENT	RECOMM-ENDATION	DESCRIPTION	OPPORTUNITIES	CONSTRAINTS	JUSTIFICATION
ALL-WAY STOP (AWS)	Advance for further consideration	Install all-way stop-control at the intersection of NW Hawthorne Avenue/NW Hill Street.	• Stops EB/WB traffic that conflicts with people walking and biking to/from the bridge	• Does not eliminate conflict between WB vehicles and people walking and biking to/from the bridge • Requires people biking to stop at intersection	Stopping westbound traffic will increase westbound queues by approximately 50 feet, to 100 feet total (30% of available storage)[7]. However, this will add significant benefit to safety and design flexibility to move people biking to/from the bridge to Hawthorne Avenue or Hill Street.
ACTIVE WARNING AWS	Advance for further consideration	Install traditional all-way stop-control with active warning signs[8] to alert drivers of people walking or biking exiting the bridge.	• Stops EB/WB traffic that conflicts with people walking and biking to/from the bridge • Enhances driver awareness of people walking and biking to/from the bridge	• Does not eliminate conflict between WB vehicles and people walking and biking to/from the bridge • Requires people biking to stop at intersection	This design has the same advantages/disadvantages as traditional AWS, but with the added benefit of detectable warning to motorists that there are people biking descending the bridge. Benefits the interaction between WB drivers and people biking. May not fit the context of the Downtown area.
PROTECTED INTERSECTION WITH AWS	Advance for further consideration	Install a protected intersection treatment (see example in Figure 5) to enhance crossings for people biking.	• Stops EB/WB traffic that conflicts with people walking and biking to/from the bridge • Reduces conflict between WB vehicles and people biking WB compared to traditional/active warning AWS	• Does not eliminate conflict between WB vehicles and people biking WB • Requires people biking to stop at intersection • Highest cost AWS option and may have a larger ROW footprint.	This design has the same advantages/disadvantages as active warning AWS but with the added striping/medians to guide people biking to/from the bridge to other legs. Guides people driving as to what behavior to expect from people biking.

[7] See Appendix for all-way stop queuing and operations analysis results

[8] Flashing warning signs on NW Hawthorne Avenue that are activated when people are biking on the bridge.

TREATMENT	RECOMM-ENDATION	DESCRIPTION	OPPORTUNITIES	CONSTRAINTS	JUSTIFICATION
TRAFFIC SIGNAL	Do not advance	Install a traffic signal at the intersection to control conflicts between people driving and people walking or biking.	• Can include bicycle exclusive phasing • Less communication required between people driving and people walking • Increases likelihood of people biking yielding at intersection	• Does not meet traffic signal warrants based on vehicle volume (other warrants may be met.) • Higher cost of maintenance and installation	This treatment offers the benefit of protective phasing for a person biking, allowing higher volume throughput for people biking compared to a protected AWS.
CLOSE SOUTH LEG	Advance for further consideration	Close NW Hill Street south of NW Hawthorne Avenue. This would limit EB traffic to left turns only, SB traffic to right turns only and WB traffic to thru or right turns.	• Reduces the number of conflicts for people walking and biking • Does not require people walking or biking to stop at the intersection (particularly if combined with a shared use path elsewhere on Hawthorne Avenue)	• Inhibits vehicle circulation • Forces more vehicles onto NW Harriman Street which is on the low stress bike network.	This treatment has the best ability to reduce vehicle conflicts for people walking and biking to/from the bridge. For the greatest impact, it would require either moving the low stress network to NW Hill Street or adding a shared use path on the south side of NW Hawthorne Avenue.
FLYOVER RAMP	Do Not Advance	Add an additional structure to allow people biking WB to connect at-grade on the north side of NW Hawthorne Avenue, where drivers would typically expect someone biking WB.	• Eliminates need for people biking who are descending the bridge to move from the south of Hawthorne Avenue to the north side	• Would significantly increase cost to the alternatives • Would create an additional structure to build and maintain	This treatment would more easily transition people biking to in-lane on Hawthorne Avenue. Drivers would still have limited visibility of people biking and the cost of the bridge would significantly increase.
ROUNDABOUT	Do Not Advance	Install a roundabout at the intersection of NW Hawthorne Avenue/NW Hill Street.	• Slows vehicle speeds • May reduce vehicle queues compared to an AWS	• Larger intersection footprint and right-of-way impact • Increased costs compared to an AWS • Geometric challenges given close proximity of bridge touching down at-grade	This treatment does not offer significant benefits compared to an all-way stop-control (e.g., similar conflicts between drivers and people walking and biking) and would add significant right-of-way impacts and cost.

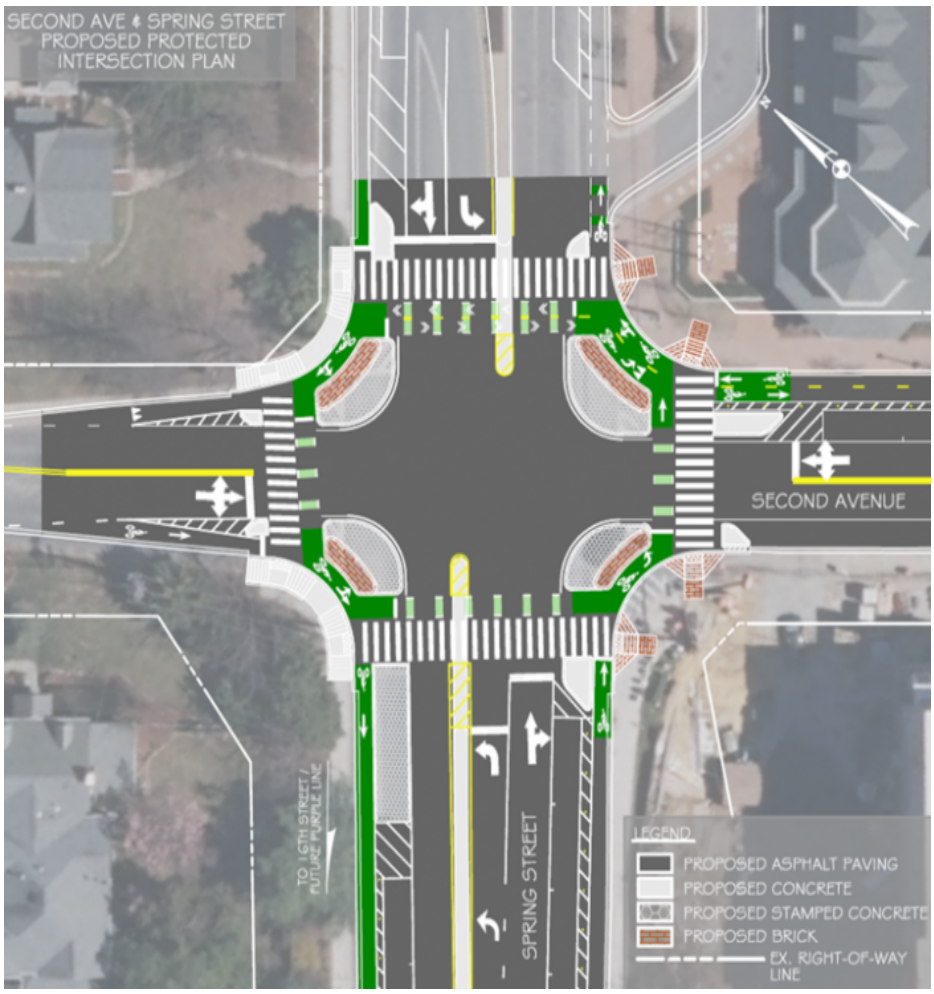

FIGURE 5: PROTECTED INTERSECTION DESIGN EXAMPLE[9]

CIRCULATION IMPACTS

While the extents of the Hawthorne Bridge concepts are focused between NW Hill Street and NE 2nd Street, circulation in the broader area was evaluated to understand how people walking, biking, and driving can potentially access the Core Area and Downtown.

The following sections identify existing gaps or modal restrictions in the study area. These sections also document possible future conditions that may impact circulation in the area. The intent of identifying these circulation impacts is to understand areas where impacts to circulation for certain modes may need to affect planning decisions (such as the identification of a low stress network for people walking/biking, resource allocation for future projects, etc.), particularly when considering

[9] Montgomery County Division of Transportation Engineering

improvements at Hawthorne Avenue, Franklin Avenue and Greenwood Avenue as a system rather than individual corridors.

CIRCULATION FOR PEOPLE DRIVING

The following figure and supporting table display and detail the following:

- Locations where existing vehicle circulation gaps exist, due to undeveloped right of way conditions, and turning restrictions at intersections
- Impacts to vehicle circulation that *will* result from buildout of any of the proposed Hawthorne Avenue Bridge concepts
- Impacts to bicycle or pedestrian circulation that *could* result from potential future upgrades to the bicycle/pedestrian network in the area to support key walking and biking routes or the low stress bicycle network. Additional public outreach and engagement would be conducted before any future speculative projects would be implemented.

FIGURE 6: VEHICLE CIRCULATION IMPACTS

TABLE 7: VEHICLE CIRCULATION IMPACTS SUPPORTING TABLE

INDEX #	IMPACT TYPE	IMPACT TIMING	DESCRIPTION
1	Turn Restriction	Speculative Future	Potential multimodal intersection upgrades associated with the low stress NW Harriman Street route may introduce restrictions to motorist turning movements to/from Greenwood Avenue. May force more motorists to NW Hill Street.
2	Turn Restriction	Existing	Existing right-in-right-out treatment for NE 2nd Street access onto NE Greenwood Avenue. Restricts north/south connectivity. Not planned to change in the City of Bend 2040 TSP horizon. Forces some motorists to NE 1st Street.
3	Circulation Gap	Existing	Existing unimproved street section on NE Irving Avenue between NE 2nd Street and NE 1st Street that does not enable efficient vehicle travel. Limits east/west connectivity, forcing some motorists to NE Hawthorne Avenue instead.
4	Turn Restriction	Hawthorne Bridge Buildout	Turn restrictions which may result from intersection treatments implemented to tie Hawthorne Avenue bridge into existing transportation network (see Intersection Treatments discussion above).
5	Directional Restriction	Hawthorne Bridge Buildout	Directional restriction eliminating eastbound travel because of project buildout. Traffic related to US 97 southbound parkway access will be diverted to NW Colorado Avenue or NW Revere Avenue. Increased vehicle traffic to north/south collectors such as NW Bond Street and NW Wall Street may occur as a result.
6	Turn Restriction	Hawthorne Bridge Buildout	Turn restrictions which may result from intersection treatments implemented to tie Hawthorne Avenue bridge into existing transportation network.
7	Turn Restriction	Speculative Future	Potential multimodal intersection upgrades associated with the low stress NE Hawthorne Street route may introduce restrictions to motorist turning movements to/from NE 3rd Street. May force more motorists to NE Greeley and NE Irving Avenues.
8	Circulation Gap	Existing	Existing unimproved street section on NE Greeley Avenue between NE 2nd Street and NE 1st Street that does not enable efficient vehicle travel. Limits east/west connectivity, forcing some motorists to NE Hawthorne Avenue instead.
9	Turn Restriction	Speculative Future	Potential multimodal intersection upgrades associated with the low stress NW Harriman Street route may introduce restrictions to motorist turning movements to/from NW Franklin Avenue. May force more motorists to NE 1st Street.
10	Turn Restriction	Existing	Existing right-in-right-out treatment for NW Hill Street access onto NW Franklin Avenue. Restricts north/south connectivity. Forces some motorists to NW Harriman Street.
11	Turn Restriction	Speculative Future	Potential multimodal intersection upgrades associated with the low stress NE 2nd Street route may introduce restrictions to motorist turning movements to/from NE Franklin Avenue. May force more motorists to NE 1st Street.

CIRCULATION FOR PEOPLE WALKING AND BIKING

Within the TSP, the City has identified a low stress bicycle network (LSN) and key walking and biking routes[10]. The following streets in the area have been identified as part of the LSN with many also serving as key walking and biking routes:

- NW Harriman Street (LSN, key route)
- NW 1st Street (LSN)
- NW 2nd Street (LSN)
- Hawthorne Avenue (LSN, key route)
- Franklin Avenue (LSN, key route)

The following figure and supporting table display and detail the following:

- Locations of existing bicycle or pedestrian circulation gaps
- Impacts to bicycle or pedestrian circulation that *will* result from buildout of any of the proposed Hawthorne Avenue Bridge concepts
- Impacts to bicycle or pedestrian circulation that *could* result from potential future upgrades to the bicycle/pedestrian network in the area to support key walking and biking routes or the low stress bicycle network. Additional public outreach and engagement would be conducted before any future speculative projects would be implemented.

[10] Figure 5-1 and Figure 5-3b, City of Bend Transportation System Plan, Adopted 2020

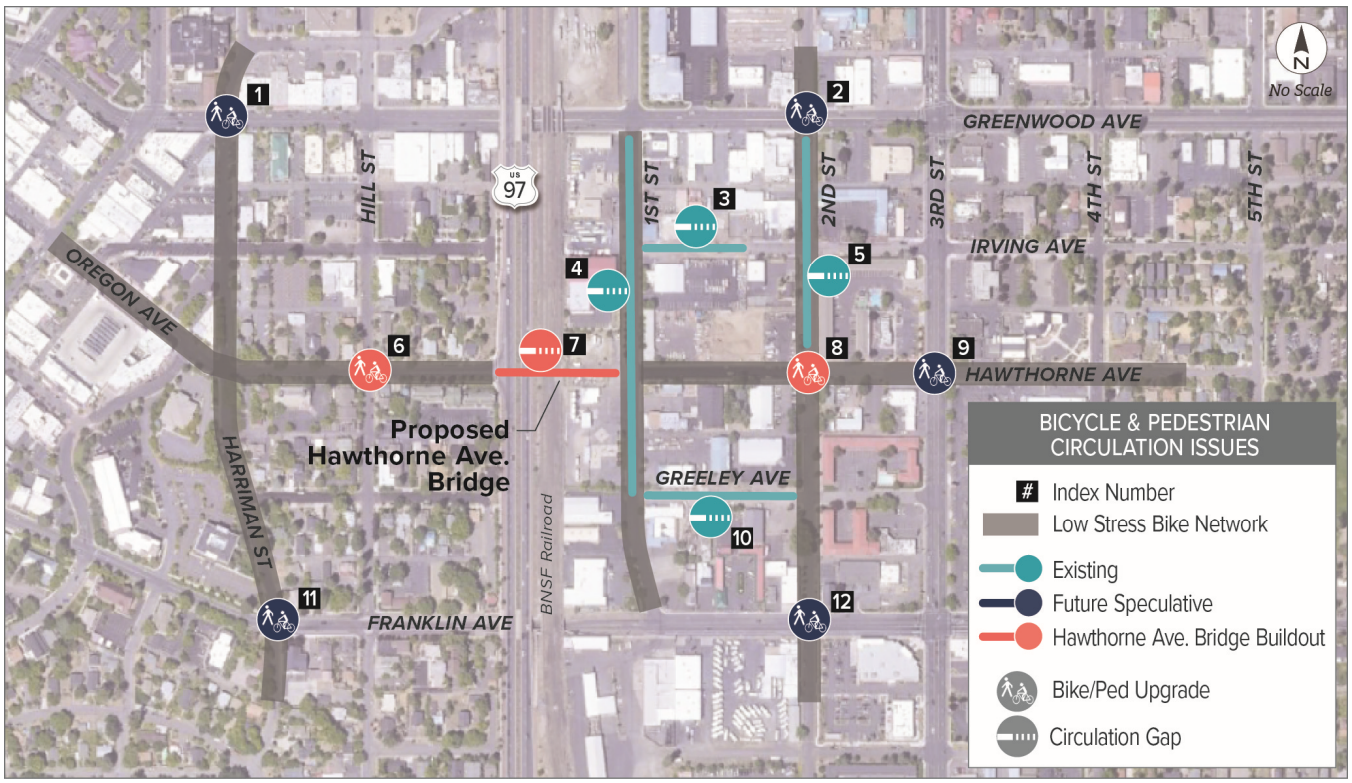

FIGURE 7: BICYCLE/PEDESTRIAN CIRCULATION IMPACTS

TABLE 8: BICYCLE/PEDESTRIAN CIRCULATION IMPACTS SUPPORTING TABLE

INDEX #	IMPACT TYPE	IMPACT TIMING	DESCRIPTION
1	Bike/Ped Upgrade	Speculative Future	Potential multimodal intersection upgrades associated with the low stress NW Harriman Street route. Will benefit north/south bicycle/pedestrian connectivity.
2	Bike/Ped Upgrade	Speculative Future	Potential multimodal intersection upgrades associated with the low stress NE 2nd Street route. Will benefit north/south bicycle/pedestrian connectivity.
3	Circulation Gap	Existing	Existing unimproved street section on NE Irving Ave between NE 2nd Street and NE 1st Street that does not enable bicycle/pedestrian travel. Limits east/west connectivity.
4	Circulation Gap	Existing	Existing intermittent sidewalk gaps on NE 1st Street and NE 2nd Street. Limits north/south pedestrian connectivity. See Figure 8 below for an example of one of the gaps on NE 1st Street.
5	Circulation Gap	Existing	
6	Bike/Ped Upgrade	Hawthorne Bridge Buildout	Intersection treatments implemented to tie Hawthorne Ave bridge into existing transportation network.
7	Circulation Gap	Hawthorne Bridge Buildout	Proposed Hawthorne Avenue bicycle/pedestrian bridge. Will provide east/west connectivity for the low stress bike network and may divert people walking/biking off high vehicle volume roadways such as Franklin Ave and Greenwood Ave and onto Hawthorne Ave.
8	Bike/Ped Upgrade	Hawthorne Bridge Buildout	Intersection treatments implemented to tie Hawthorne Ave bridge into existing transportation network.
9	Bike/Ped Upgrade	Speculative Future	Potential multimodal intersection upgrades associated with the low stress NE Hawthorne Street route. This upgrade would enhance the low stress network by connecting the proposed Hawthorne Bridge to the eastern city.
10	Circulation Gap	Existing	Existing unimproved street section on NE Greeley Avenue between NE 2nd Street and NE 1st Street that does not enable bicycle/pedestrian travel. Limits east/west connectivity.
11	Bike/Ped Upgrade	Speculative Future	Potential multimodal intersection upgrades associated with the low stress NW Harriman Street route. Will benefit north/south bicycle/pedestrian connectivity.
12	Bike/Ped Upgrade	Speculative Future	Potential multimodal intersection upgrades associated with the low stress NW Harriman Street route. Will benefit north/south bicycle/pedestrian connectivity.

FIGURE 8: NE 1ST STREET SIDEWALK GAP

APPENDIX A: COUNT DATA

ALL TRAFFIC DATA SERVICES
(303) 216-2439
www.alltrafficdata.net

Location: 1 NW Harriman St & NW Hawthorne Ave PM
Date: Tuesday, March 8, 2022
Peak Hour: 04:05 PM - 05:05 PM
Peak 15-Minutes: 04:25 PM - 04:40 PM

Peak Hour

Motorized Vehicles

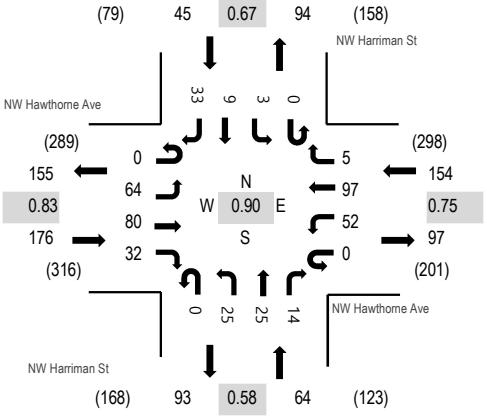

Heavy Vehicles

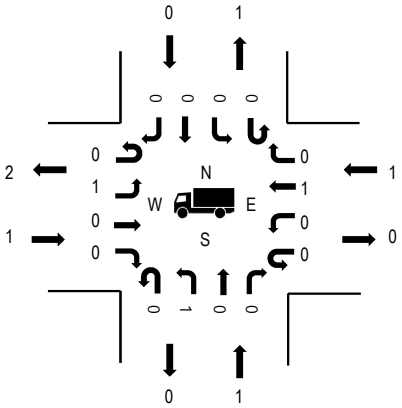

Pedestrians

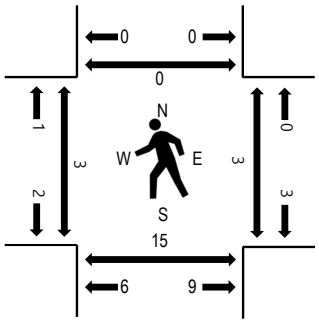

Note: Total study counts contained in parentheses.

	HV%	PHF
EB	0.6%	0.83
WB	0.6%	0.75
NB	1.6%	0.58
SB	0.0%	0.67
All	0.7%	0.90

Traffic Counts - Motorized Vehicles

Interval Start Time	NW Hawthorne Ave Eastbound				NW Hawthorne Ave Westbound				NW Harriman St Northbound				NW Harriman St Southbound				Total	Rolling Hour
	U-Turn	Left	Thru	Right	U-Turn	Left	Thru	Right	U-Turn	Left	Thru	Right	U-Turn	Left	Thru	Right		
4:00 PM	0	4	6	2	0	3	7	1	0	1	3	3	0	0	2	3	35	427
4:05 PM	0	3	9	6	0	5	8	0	0	3	3	1	0	0	1	7	46	439
4:10 PM	0	6	7	3	0	4	6	1	0	1	3	0	0	0	0	3	34	426
4:15 PM	0	7	10	2	0	8	7	2	0	0	1	2	0	0	2	0	41	424
4:20 PM	0	6	2	2	0	4	11	0	0	2	1	1	0	0	0	5	34	420
4:25 PM	0	4	5	1	0	4	10	1	0	1	3	0	0	0	0	0	29	430
4:30 PM	0	7	5	3	0	6	15	0	0	2	1	3	0	1	4	5	52	423
4:35 PM	0	10	5	5	0	3	7	0	0	3	2	1	0	1	0	4	41	397
4:40 PM	0	8	6	0	0	1	4	1	0	2	1	1	0	1	0	2	27	383
4:45 PM	0	2	11	2	0	5	5	0	0	1	1	1	0	0	1	2	31	390
4:50 PM	0	2	5	3	0	5	5	0	0	5	1	1	0	0	0	2	29	393
4:55 PM	0	4	6	2	0	3	9	0	0	1	0	1	0	0	1	1	28	381
5:00 PM	0	5	9	3	0	4	10	0	0	4	8	2	0	0	0	2	47	389
5:05 PM	0	3	11	0	0	1	7	0	0	2	7	1	0	1	0	0	33	
5:10 PM	0	1	4	3	0	3	8	1	0	2	1	3	0	0	2	4	32	
5:15 PM	0	4	7	4	0	3	8	1	0	2	0	1	0	2	3	2	37	
5:20 PM	0	7	8	3	0	4	14	1	0	0	1	3	0	0	2	1	44	
5:25 PM	0	2	3	1	0	3	9	0	0	2	1	0	0	0	1	0	22	
5:30 PM	0	1	2	0	0	7	9	0	0	2	2	2	0	0	1	0	26	
5:35 PM	0	2	5	1	0	4	7	0	0	2	1	2	0	0	1	2	27	
5:40 PM	0	7	7	1	0	6	7	0	0	1	1	2	0	1	1	0	34	
5:45 PM	0	4	12	2	0	2	8	0	0	3	0	1	0	0	1	1	34	
5:50 PM	0	2	6	1	0	3	2	0	0	1	0	0	0	1	0	1	17	
5:55 PM	0	3	9	2	0	2	12	1	0	3	2	1	0	0	0	1	36	
Count Total	0	104	160	52	0	93	195	10	0	46	44	33	0	8	23	48	816	
Peak Hour	0	64	80	32	0	52	97	5	0	25	25	14	0	3	9	33	439	

Location: 1 NW Harriman St & NW Hawthorne Ave PM

Traffic Counts - Heavy Vehicles, Bicycles on Road, and Pedestrians/Bicycles on Crosswalk

Interval Start Time	Heavy Vehicles					Interval Start Time	Bicycles on Roadway					Interval Start Time	Pedestrians/Bicycles on Crosswalk				
	EB	NB	WB	SB	Total		EB	NB	WB	SB	Total		EB	NB	WB	SB	Total
4:00 PM	0	0	0	0	0	4:00 PM	0	1	0	0	1	4:00 PM	0	0	0	0	0
4:05 PM	0	0	0	0	0	4:05 PM	1	0	0	1	2	4:05 PM	1	0	0	0	1
4:10 PM	1	0	0	0	1	4:10 PM	0	0	0	0	0	4:10 PM	0	3	1	0	4
4:15 PM	0	0	0	0	0	4:15 PM	0	0	0	0	0	4:15 PM	0	3	0	0	3
4:20 PM	0	0	0	0	0	4:20 PM	0	0	0	0	0	4:20 PM	0	3	0	0	3
4:25 PM	0	0	0	0	0	4:25 PM	0	0	0	0	0	4:25 PM	0	1	1	0	2
4:30 PM	0	0	0	0	0	4:30 PM	0	0	0	0	0	4:30 PM	0	2	0	0	2
4:35 PM	0	0	0	0	0	4:35 PM	0	0	0	0	0	4:35 PM	0	0	0	0	0
4:40 PM	0	0	0	0	0	4:40 PM	0	0	0	0	0	4:40 PM	0	0	1	0	1
4:45 PM	0	0	0	0	0	4:45 PM	0	0	0	0	0	4:45 PM	0	0	0	0	0
4:50 PM	0	1	1	0	2	4:50 PM	0	0	0	0	0	4:50 PM	0	0	0	0	0
4:55 PM	0	0	0	0	0	4:55 PM	0	0	0	1	1	4:55 PM	0	1	0	0	1
5:00 PM	0	0	0	0	0	5:00 PM	0	0	0	0	0	5:00 PM	2	2	0	0	4
5:05 PM	0	1	0	0	1	5:05 PM	1	0	0	0	1	5:05 PM	0	0	0	0	0
5:10 PM	0	0	0	0	0	5:10 PM	0	0	1	0	1	5:10 PM	0	0	0	0	0
5:15 PM	0	0	0	0	0	5:15 PM	0	0	0	0	0	5:15 PM	0	1	0	1	2
5:20 PM	1	0	0	0	1	5:20 PM	0	0	0	0	0	5:20 PM	0	0	0	4	4
5:25 PM	0	0	0	0	0	5:25 PM	0	0	0	0	0	5:25 PM	0	0	0	0	0
5:30 PM	0	0	0	0	0	5:30 PM	0	0	0	0	0	5:30 PM	0	0	0	0	0
5:35 PM	0	0	0	0	0	5:35 PM	0	0	0	0	0	5:35 PM	0	1	0	3	4
5:40 PM	0	0	0	0	0	5:40 PM	0	0	0	0	0	5:40 PM	0	0	0	0	0
5:45 PM	0	0	0	0	0	5:45 PM	0	0	1	0	1	5:45 PM	0	0	0	0	0
5:50 PM	0	0	0	0	0	5:50 PM	0	0	0	0	0	5:50 PM	0	0	0	0	0
5:55 PM	0	0	0	0	0	5:55 PM	0	0	0	0	0	5:55 PM	0	0	0	0	0
Count Total	2	2	1	0	5	Count Total	2	1	2	2	7	Count Total	3	17	3	8	31
Peak Hour	1	1	1	0	3	Peak Hour	1	0	0	2	3	Peak Hour	3	15	3	0	21

Location: 2 NW Hill St & NW Hawthorne Ave PM

ALL TRAFFIC DATA SERVICES
(303) 216-2439
www.alltrafficdata.net

Location: 2 NW Hill St & NW Hawthorne Ave PM
Date: Tuesday, March 8, 2022
Peak Hour: 04:00 PM - 05:00 PM
Peak 15-Minutes: 04:00 PM - 04:15 PM

Peak Hour

Motorized Vehicles

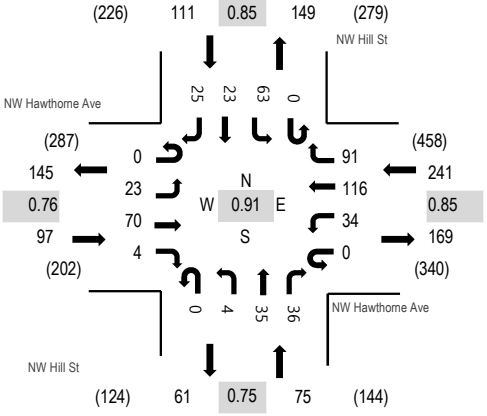

Heavy Vehicles

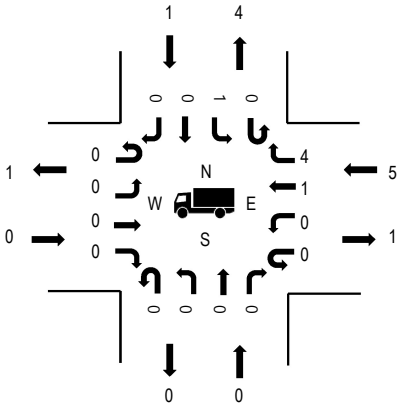

Pedestrians

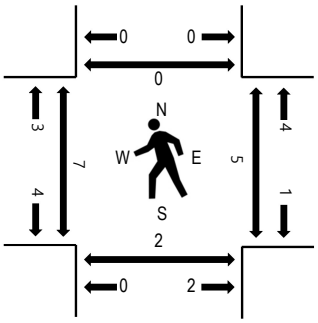

Note: Total study counts contained in parentheses.

	HV%	PHF
EB	0.0%	0.76
WB	2.1%	0.85
NB	0.0%	0.75
SB	0.9%	0.85
All	1.1%	0.91

Traffic Counts - Motorized Vehicles

Interval Start Time	NW Hawthorne Ave Eastbound				NW Hawthorne Ave Westbound				NW Hill St Northbound				NW Hill St Southbound				Total	Rolling Hour
	U-Turn	Left	Thru	Right	U-Turn	Left	Thru	Right	U-Turn	Left	Thru	Right	U-Turn	Left	Thru	Right		
4:00 PM	0	3	5	1	0	1	12	7	0	0	7	2	0	8	6	4	56	524
4:05 PM	0	3	9	0	0	1	6	7	0	1	5	4	0	8	1	0	45	518
4:10 PM	0	1	5	0	0	2	11	9	0	0	2	2	0	5	1	5	43	522
4:15 PM	0	3	10	1	0	4	14	8	0	1	5	4	0	4	1	0	55	521
4:20 PM	0	0	2	0	0	2	10	9	0	1	0	3	0	4	2	2	35	512
4:25 PM	0	1	2	1	0	7	11	7	0	1	1	2	0	5	0	2	40	524
4:30 PM	0	1	8	0	0	2	15	9	0	0	2	4	0	2	2	2	47	519
4:35 PM	0	1	6	0	0	3	4	7	0	0	0	0	0	8	6	4	39	506
4:40 PM	0	3	4	0	0	5	6	8	0	0	4	6	0	5	1	2	44	514
4:45 PM	0	4	10	0	0	3	7	6	0	0	4	0	0	4	0	2	40	501
4:50 PM	0	0	4	0	0	2	8	8	0	0	2	5	0	5	0	2	36	512
4:55 PM	0	3	5	1	0	2	12	6	0	0	3	4	0	5	3	0	44	509
5:00 PM	0	2	6	0	0	2	11	8	0	3	6	3	0	6	1	2	50	506
5:05 PM	0	4	9	1	0	2	7	9	0	0	2	3	0	6	5	1	49	
5:10 PM	0	4	3	1	0	4	10	5	0	0	3	4	0	5	2	1	42	
5:15 PM	0	3	10	0	0	5	9	6	0	0	3	0	0	10	0	0	46	
5:20 PM	0	2	5	0	0	2	14	6	0	0	7	2	0	5	0	4	47	
5:25 PM	0	1	2	0	0	3	11	5	0	0	1	3	0	4	3	2	35	
5:30 PM	0	4	0	0	0	1	10	4	0	2	1	2	0	6	3	1	34	
5:35 PM	0	4	7	0	0	1	11	6	0	0	2	1	0	13	0	2	47	
5:40 PM	0	2	5	1	0	3	12	1	0	0	2	0	0	3	1	1	31	
5:45 PM	0	4	9	0	0	6	8	6	0	1	4	4	0	6	1	2	51	
5:50 PM	0	4	4	1	0	6	4	1	0	0	2	1	0	10	0	0	33	
5:55 PM	0	1	4	2	0	4	10	4	0	2	1	4	0	6	2	1	41	
Count Total	0	58	134	10	0	73	233	152	0	12	69	63	0	143	41	42	1,030	
Peak Hour	0	23	70	4	0	34	116	91	0	4	35	36	0	63	23	25	524	

Location: 2 NW Hill St & NW Hawthorne Ave PM

Traffic Counts - Heavy Vehicles, Bicycles on Road, and Pedestrians/Bicycles on Crosswalk

Interval Start Time	Heavy Vehicles					Interval Start Time	Bicycles on Roadway					Interval Start Time	Pedestrians/Bicycles on Crosswalk				
	EB	NB	WB	SB	Total		EB	NB	WB	SB	Total		EB	NB	WB	SB	Total
4:00 PM	0	0	0	0	0	4:00 PM	0	0	0	0	0	4:00 PM	0	0	0	0	0
4:05 PM	0	0	0	0	0	4:05 PM	0	0	0	0	0	4:05 PM	0	0	0	0	0
4:10 PM	0	0	0	0	0	4:10 PM	0	0	0	0	0	4:10 PM	0	2	1	0	3
4:15 PM	0	0	2	0	2	4:15 PM	0	0	0	0	0	4:15 PM	2	0	2	0	4
4:20 PM	0	0	0	0	0	4:20 PM	0	0	0	0	0	4:20 PM	1	0	1	0	2
4:25 PM	0	0	0	0	0	4:25 PM	0	0	0	0	0	4:25 PM	3	0	0	0	3
4:30 PM	0	0	0	1	1	4:30 PM	0	0	0	0	0	4:30 PM	0	0	0	0	0
4:35 PM	0	0	0	0	0	4:35 PM	0	0	0	0	0	4:35 PM	0	0	0	0	0
4:40 PM	0	0	1	0	1	4:40 PM	0	0	0	0	0	4:40 PM	0	0	1	0	1
4:45 PM	0	0	0	0	0	4:45 PM	0	0	0	1	1	4:45 PM	1	0	0	0	1
4:50 PM	0	0	2	0	2	4:50 PM	0	2	0	1	3	4:50 PM	0	0	0	0	0
4:55 PM	0	0	0	0	0	4:55 PM	0	0	0	0	0	4:55 PM	0	0	0	0	0
5:00 PM	0	0	1	0	1	5:00 PM	0	0	0	0	0	5:00 PM	0	0	0	0	0
5:05 PM	0	0	0	0	0	5:05 PM	0	0	0	0	0	5:05 PM	0	0	0	0	0
5:10 PM	0	0	0	0	0	5:10 PM	0	0	0	0	0	5:10 PM	0	0	0	0	0
5:15 PM	0	0	0	0	0	5:15 PM	0	0	0	0	0	5:15 PM	0	0	0	0	0
5:20 PM	1	0	0	1	2	5:20 PM	0	2	0	0	2	5:20 PM	0	0	0	4	4
5:25 PM	0	0	0	0	0	5:25 PM	0	0	0	0	0	5:25 PM	0	0	1	0	1
5:30 PM	0	0	0	0	0	5:30 PM	0	1	0	0	1	5:30 PM	0	0	0	1	1
5:35 PM	0	0	0	0	0	5:35 PM	0	0	0	0	0	5:35 PM	0	0	0	0	0
5:40 PM	0	0	0	0	0	5:40 PM	0	0	0	0	0	5:40 PM	0	0	0	0	0
5:45 PM	0	0	0	0	0	5:45 PM	0	0	0	1	1	5:45 PM	1	0	0	0	1
5:50 PM	0	0	0	0	0	5:50 PM	0	0	0	0	0	5:50 PM	0	0	0	0	0
5:55 PM	0	0	0	0	0	5:55 PM	0	0	0	0	0	5:55 PM	0	0	0	0	0
Count Total	1	0	6	2	9	Count Total	0	5	0	3	8	Count Total	8	2	6	5	21
Peak Hour	0	0	5	1	6	Peak Hour	0	2	0	2	4	Peak Hour	7	2	5	0	14

Location: 3 Hwy 97 & NW Hawthorne Ave PM

ALL TRAFFIC DATA SERVICES
(303) 216-2439
www.alltrafficdata.net

Location: 3 Hwy 97 & NW Hawthorne Ave PM
Date: Tuesday, March 8, 2022
Peak Hour: 05:00 PM - 06:00 PM
Peak 15-Minutes: 05:30 PM - 05:45 PM

Peak Hour

Motorized Vehicles

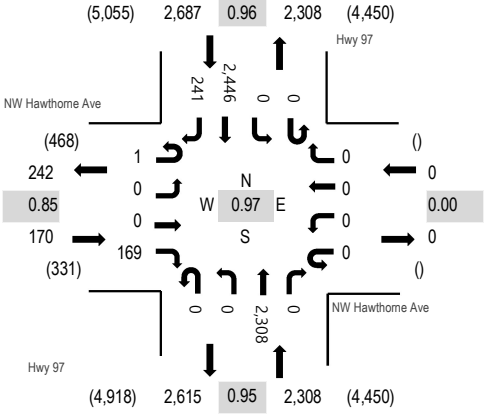

Heavy Vehicles

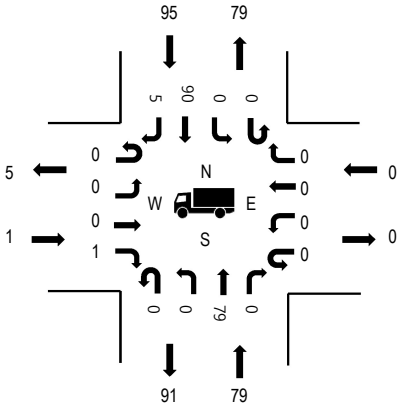

Pedestrians

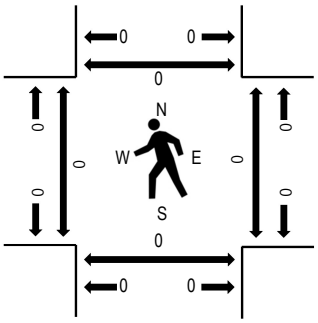

Note: Total study counts contained in parentheses.

	HV%	PHF
EB	0.6%	0.85
WB	0.0%	0.00
NB	3.4%	0.95
SB	3.5%	0.96
All	3.4%	0.97

Traffic Counts - Motorized Vehicles

Interval Start Time	NW Hawthorne Ave Eastbound				NW Hawthorne Ave Westbound				Hwy 97 Northbound				Hwy 97 Southbound				Total	Rolling Hour
	U-Turn	Left	Thru	Right	U-Turn	Left	Thru	Right	U-Turn	Left	Thru	Right	U-Turn	Left	Thru	Right		
4:00 PM	0	0	0	16	0	0	0	0	0	0	153	0	0	0	147	15	331	4,671
4:05 PM	0	0	0	15	0	0	0	0	0	0	145	0	0	0	170	20	350	4,743
4:10 PM	0	0	0	16	0	0	0	0	0	0	176	0	0	0	175	14	381	4,795
4:15 PM	0	0	0	13	0	0	0	0	0	0	170	0	0	0	168	19	370	4,889
4:20 PM	0	0	0	13	0	0	0	0	0	0	193	0	0	0	180	20	406	4,950
4:25 PM	0	0	0	14	0	0	0	0	0	0	175	0	0	0	173	14	376	4,964
4:30 PM	0	0	0	12	0	0	0	0	0	0	197	0	0	0	183	13	405	4,999
4:35 PM	0	0	0	14	0	0	0	0	0	0	183	0	0	0	204	16	417	5,036
4:40 PM	0	0	0	13	0	0	0	0	0	0	198	0	0	0	181	27	419	5,058
4:45 PM	0	0	0	15	0	0	0	0	0	0	187	0	0	0	193	27	422	5,087
4:50 PM	0	0	0	5	0	0	0	0	0	0	182	0	0	0	208	21	416	5,106
4:55 PM	0	0	0	15	0	0	0	0	0	0	183	0	0	0	160	20	378	5,121
5:00 PM	0	0	0	12	0	0	0	0	0	0	182	0	0	0	193	16	403	5,165
5:05 PM	0	0	0	20	0	0	0	0	0	0	182	0	0	0	179	21	402	
5:10 PM	0	0	0	12	0	0	0	0	0	0	225	0	0	0	223	15	475	
5:15 PM	0	0	0	18	0	0	0	0	0	0	189	0	0	0	196	28	431	
5:20 PM	0	0	0	14	0	0	0	0	0	0	187	0	0	0	200	19	420	
5:25 PM	0	0	0	11	0	0	0	0	0	0	177	0	0	0	197	26	411	
5:30 PM	0	0	0	11	0	0	0	0	0	0	201	0	0	0	202	28	442	
5:35 PM	0	0	0	13	0	0	0	0	0	0	198	0	0	0	212	16	439	
5:40 PM	0	0	0	15	0	0	0	0	0	0	207	0	0	0	211	15	448	
5:45 PM	0	0	0	15	0	0	0	0	0	0	181	0	0	0	223	22	441	
5:50 PM	0	0	0	12	0	0	0	0	0	0	192	0	0	0	211	16	431	
5:55 PM	1	0	0	16	0	0	0	0	0	0	187	0	0	0	199	19	422	
Count Total	1	0	0	330	0	0	0	0	0	0	4,450	0	0	0	4,588	467	9,836	
Peak Hour	1	0	0	169	0	0	0	0	0	0	2,308	0	0	0	2,446	241	5,165	

Location: 3 Hwy 97 & NW Hawthorne Ave PM

Traffic Counts - Heavy Vehicles, Bicycles on Road, and Pedestrians/Bicycles on Crosswalk

Interval Start Time	Heavy Vehicles					Interval Start Time	Bicycles on Roadway					Interval Start Time	Pedestrians/Bicycles on Crosswalk				
	EB	NB	WB	SB	Total		EB	NB	WB	SB	Total		EB	NB	WB	SB	Total
4:00 PM	0	6	0	17	23	4:00 PM	0	0	0	0	0	4:00 PM	0	0	0	0	0
4:05 PM	0	6	0	12	18	4:05 PM	0	0	0	0	0	4:05 PM	0	0	0	0	0
4:10 PM	0	10	0	8	18	4:10 PM	0	0	0	0	0	4:10 PM	0	0	0	0	0
4:15 PM	0	7	0	5	12	4:15 PM	0	0	0	0	0	4:15 PM	0	0	0	0	0
4:20 PM	1	6	0	5	12	4:20 PM	0	0	0	0	0	4:20 PM	0	0	0	0	0
4:25 PM	0	9	0	8	17	4:25 PM	0	0	0	0	0	4:25 PM	0	0	0	0	0
4:30 PM	0	6	0	9	15	4:30 PM	0	0	0	0	0	4:30 PM	1	0	0	0	1
4:35 PM	0	7	0	6	13	4:35 PM	0	0	0	0	0	4:35 PM	0	0	0	0	0
4:40 PM	0	7	0	7	14	4:40 PM	0	0	0	0	0	4:40 PM	0	0	0	0	0
4:45 PM	0	6	0	6	12	4:45 PM	0	0	0	0	0	4:45 PM	0	0	0	0	0
4:50 PM	0	8	0	2	10	4:50 PM	0	0	0	0	0	4:50 PM	0	0	0	0	0
4:55 PM	0	8	0	5	13	4:55 PM	0	0	0	0	0	4:55 PM	0	0	0	0	0
5:00 PM	0	6	0	11	17	5:00 PM	0	0	0	0	0	5:00 PM	0	0	0	0	0
5:05 PM	0	3	0	6	9	5:05 PM	0	0	0	0	0	5:05 PM	0	0	0	0	0
5:10 PM	0	9	0	13	22	5:10 PM	0	0	0	0	0	5:10 PM	0	0	0	0	0
5:15 PM	0	4	0	12	16	5:15 PM	0	0	0	0	0	5:15 PM	0	0	0	0	0
5:20 PM	0	7	0	8	15	5:20 PM	0	0	0	0	0	5:20 PM	0	0	0	0	0
5:25 PM	0	9	0	4	13	5:25 PM	0	0	0	0	0	5:25 PM	0	0	0	0	0
5:30 PM	1	3	0	3	7	5:30 PM	0	0	0	0	0	5:30 PM	0	0	0	0	0
5:35 PM	0	7	0	7	14	5:35 PM	0	0	0	0	0	5:35 PM	0	0	0	0	0
5:40 PM	0	8	0	6	14	5:40 PM	0	0	0	0	0	5:40 PM	0	0	0	0	0
5:45 PM	0	6	0	3	9	5:45 PM	0	0	0	0	0	5:45 PM	0	0	0	0	0
5:50 PM	0	8	0	11	19	5:50 PM	0	0	0	0	0	5:50 PM	0	0	0	0	0
5:55 PM	0	9	0	11	20	5:55 PM	0	0	0	0	0	5:55 PM	0	0	0	0	0
Count Total	2	165	0	185	352	Count Total	0	0	0	0	0	Count Total	1	0	0	0	1
Peak Hour	1	79	0	95	175	Peak Hour	0	0	0	0	0	Peak Hour	0	0	0	0	0

Location: 4 NE 1st St & NE Hawthorne Ave PM

ALL TRAFFIC DATA SERVICES
(303) 216-2439
www.alltrafficdata.net

Location: 4 NE 1st St & NE Hawthorne Ave PM
Date: Tuesday, March 8, 2022
Peak Hour: 04:00 PM - 05:00 PM
Peak 15-Minutes: 04:00 PM - 04:15 PM

Peak Hour

Motorized Vehicles

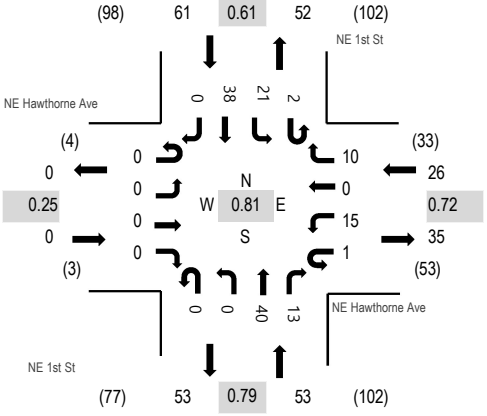

Heavy Vehicles

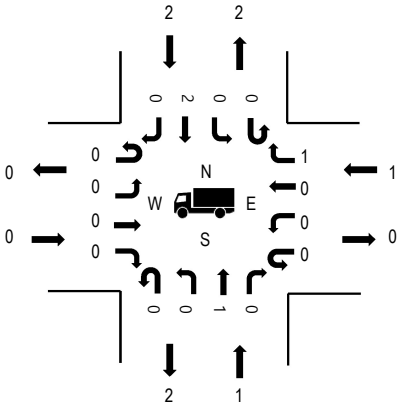

Pedestrians

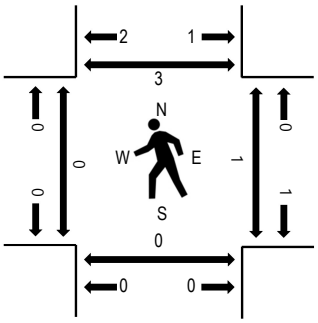

Note: Total study counts contained in parentheses.

	HV%	PHF
EB	0.0%	0.25
WB	3.8%	0.72
NB	1.9%	0.79
SB	3.3%	0.61
All	2.9%	0.81

Traffic Counts - Motorized Vehicles

Interval Start Time	NE Hawthorne Ave Eastbound				NE Hawthorne Ave Westbound				NE 1st St Northbound				NE 1st St Southbound				Total	Rolling Hour
	U-Turn	Left	Thru	Right	U-Turn	Left	Thru	Right	U-Turn	Left	Thru	Right	U-Turn	Left	Thru	Right		
4:00 PM	0	0	0	0	0	1	0	3	0	0	3	1	0	3	7	0	18	140
4:05 PM	0	0	0	0	0	1	0	1	0	0	1	1	0	6	5	0	15	134
4:10 PM	0	0	0	0	0	1	0	0	0	0	4	1	1	1	2	0	10	128
4:15 PM	0	0	0	0	0	0	0	0	0	0	2	1	0	2	5	0	10	132
4:20 PM	0	0	0	0	0	2	0	1	0	0	7	1	0	2	3	0	16	131
4:25 PM	0	0	0	0	0	2	0	2	0	0	4	1	0	1	4	0	14	127
4:30 PM	0	0	0	0	0	0	0	0	0	0	3	0	0	1	2	0	6	126
4:35 PM	0	0	0	0	0	3	0	1	0	0	2	1	0	1	2	0	10	124
4:40 PM	0	0	0	0	0	3	0	0	0	0	4	0	0	1	2	0	10	121
4:45 PM	0	0	0	0	0	1	0	1	0	0	4	1	0	1	2	0	10	118
4:50 PM	0	0	0	0	0	1	0	0	0	0	2	3	1	1	3	0	11	110
4:55 PM	0	0	0	0	1	0	0	1	0	0	4	2	0	1	1	0	10	99
5:00 PM	0	0	0	0	0	0	0	0	0	0	5	1	0	1	5	0	12	96
5:05 PM	0	0	0	0	0	1	0	0	0	0	7	0	0	1	0	0	9	
5:10 PM	0	0	0	0	0	0	0	0	0	0	7	0	0	3	4	0	14	
5:15 PM	0	0	0	0	0	0	0	1	0	0	3	1	0	2	1	1	9	
5:20 PM	0	0	0	0	0	0	0	0	0	0	5	0	0	3	2	2	12	
5:25 PM	0	2	0	1	0	0	0	1	0	0	6	1	0	0	2	0	13	
5:30 PM	0	0	0	0	0	1	0	0	0	0	1	0	0	1	1	0	4	
5:35 PM	0	0	0	0	0	0	0	1	0	0	3	1	0	1	1	0	7	
5:40 PM	0	0	0	0	0	0	0	1	0	0	2	1	0	1	1	1	7	
5:45 PM	0	0	0	0	0	0	0	0	0	0	1	0	0	0	1	0	2	
5:50 PM	0	0	0	0	0	0	0	0	0	0	0	0	0	0	0	0	0	
5:55 PM	0	0	0	0	0	1	0	0	0	0	4	0	0	0	2	0	7	
Count Total	0	2	0	1	1	18	0	14	0	0	84	18	2	34	58	4	236	
Peak Hour	0	0	0	0	1	15	0	10	0	0	40	13	2	21	38	0	140	

Location: 4 NE 1st St & NE Hawthorne Ave PM

Traffic Counts - Heavy Vehicles, Bicycles on Road, and Pedestrians/Bicycles on Crosswalk

Interval Start Time	Heavy Vehicles					Interval Start Time	Bicycles on Roadway					Interval Start Time	Pedestrians/Bicycles on Crosswalk				
	EB	NB	WB	SB	Total		EB	NB	WB	SB	Total		EB	NB	WB	SB	Total
4:00 PM	0	0	0	0	0	4:00 PM	0	0	0	0	0	4:00 PM	0	0	0	2	2
4:05 PM	0	0	0	1	1	4:05 PM	0	0	0	0	0	4:05 PM	0	0	1	0	1
4:10 PM	0	0	0	0	0	4:10 PM	0	0	0	0	0	4:10 PM	0	0	0	0	0
4:15 PM	0	0	0	0	0	4:15 PM	0	0	0	0	0	4:15 PM	0	0	0	0	0
4:20 PM	0	0	0	1	1	4:20 PM	0	0	0	0	0	4:20 PM	0	0	0	0	0
4:25 PM	0	0	0	0	0	4:25 PM	0	0	0	0	0	4:25 PM	0	0	0	0	0
4:30 PM	0	0	0	0	0	4:30 PM	0	0	0	0	0	4:30 PM	0	0	0	1	1
4:35 PM	0	0	1	0	1	4:35 PM	0	0	0	0	0	4:35 PM	0	0	0	0	0
4:40 PM	0	0	0	0	0	4:40 PM	0	0	0	0	0	4:40 PM	0	0	0	0	0
4:45 PM	0	0	0	0	0	4:45 PM	0	0	1	0	1	4:45 PM	0	0	0	0	0
4:50 PM	0	0	0	0	0	4:50 PM	0	0	1	0	1	4:50 PM	0	0	0	0	0
4:55 PM	0	1	0	0	1	4:55 PM	0	0	0	0	0	4:55 PM	0	0	0	0	0
5:00 PM	0	0	0	1	1	5:00 PM	0	0	0	0	0	5:00 PM	0	0	0	0	0
5:05 PM	0	0	0	0	0	5:05 PM	0	0	0	0	0	5:05 PM	0	0	0	0	0
5:10 PM	0	0	0	0	0	5:10 PM	0	1	0	0	1	5:10 PM	0	0	0	0	0
5:15 PM	0	1	0	1	2	5:15 PM	0	0	0	1	1	5:15 PM	0	0	0	0	0
5:20 PM	0	0	0	0	0	5:20 PM	0	0	0	0	0	5:20 PM	0	0	0	0	0
5:25 PM	0	0	0	0	0	5:25 PM	0	0	0	0	0	5:25 PM	0	0	0	0	0
5:30 PM	0	0	0	0	0	5:30 PM	0	0	0	1	1	5:30 PM	0	0	0	1	1
5:35 PM	0	0	0	0	0	5:35 PM	0	0	0	0	0	5:35 PM	0	0	0	0	0
5:40 PM	0	0	0	0	0	5:40 PM	0	0	0	0	0	5:40 PM	0	1	1	0	2
5:45 PM	0	0	0	0	0	5:45 PM	0	0	0	0	0	5:45 PM	2	0	0	0	2
5:50 PM	0	0	0	0	0	5:50 PM	0	0	0	0	0	5:50 PM	0	0	0	0	0
5:55 PM	0	0	0	0	0	5:55 PM	0	0	0	0	0	5:55 PM	0	0	0	0	0
Count Total	0	2	1	4	7	Count Total	0	1	2	2	5	Count Total	2	1	2	4	9
Peak Hour	0	1	1	2	4	Peak Hour	0	0	2	0	2	Peak Hour	0	0	1	3	4

Location: 5 NE 2nd St & NE Hawthorne Ave PM

ALL TRAFFIC DATA SERVICES
(303) 216-2439
www.alltrafficdata.net

Location: 5 NE 2nd St & NE Hawthorne Ave PM

Date: Tuesday, March 8, 2022

Peak Hour: 04:00 PM - 05:00 PM

Peak 15-Minutes: 04:05 PM - 04:20 PM

Peak Hour

Motorized Vehicles

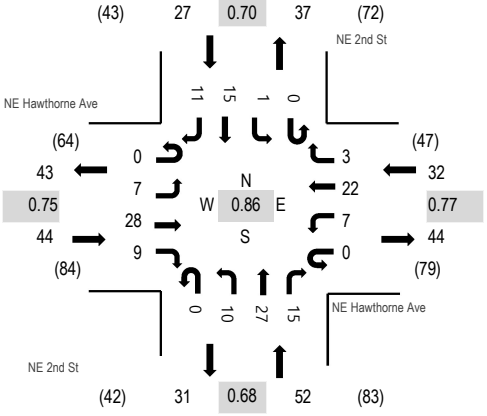

Heavy Vehicles

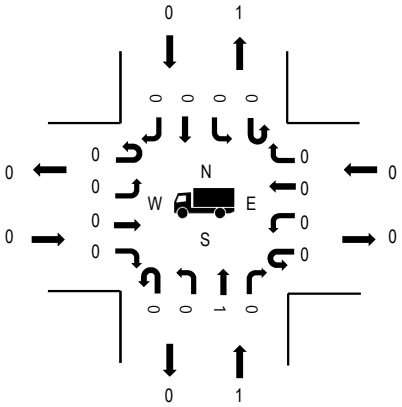

Pedestrians

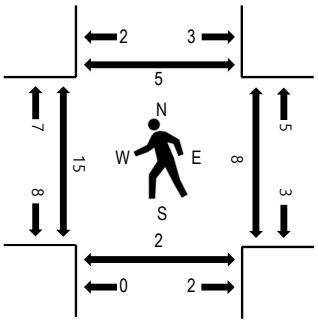

Note: Total study counts contained in parentheses.

	HV%	PHF
EB	0.0%	0.75
WB	0.0%	0.77
NB	1.9%	0.68
SB	0.0%	0.70
All	0.6%	0.86

Traffic Counts - Motorized Vehicles

Interval Start Time	NE Hawthorne Ave Eastbound				NE Hawthorne Ave Westbound				NE 2nd St Northbound				NE 2nd St Southbound				Total	Rolling Hour
	U-Turn	Left	Thru	Right	U-Turn	Left	Thru	Right	U-Turn	Left	Thru	Right	U-Turn	Left	Thru	Right		
4:00 PM	0	0	2	1	0	0	1	0	0	1	2	0	0	0	1	3	11	155
4:05 PM	0	1	4	0	0	0	1	1	0	4	1	2	0	0	4	0	18	155
4:10 PM	0	0	2	0	0	1	1	0	0	0	1	1	0	0	0	1	7	149
4:15 PM	0	0	4	1	0	0	3	0	0	1	4	5	0	0	2	0	20	153
4:20 PM	0	1	3	0	0	1	2	0	0	1	0	0	0	0	1	3	12	142
4:25 PM	0	0	1	2	0	2	3	0	0	1	3	0	0	0	1	0	13	137
4:30 PM	0	1	2	1	0	1	1	1	0	1	2	1	0	0	0	0	11	129
4:35 PM	0	1	2	2	0	0	3	0	0	1	4	0	0	0	1	1	15	134
4:40 PM	0	1	0	2	0	1	0	0	0	0	1	1	0	0	0	3	9	125
4:45 PM	0	1	2	0	0	0	0	0	0	0	3	2	0	0	1	0	9	127
4:50 PM	0	0	4	0	0	1	7	0	0	0	4	2	0	0	2	0	20	122
4:55 PM	0	1	2	0	0	0	0	1	0	0	2	1	0	1	2	0	10	108
5:00 PM	0	0	3	0	0	0	1	0	0	1	1	0	0	1	2	2	11	102
5:05 PM	0	0	5	0	1	1	1	1	0	1	0	0	0	1	1	0	12	
5:10 PM	0	1	4	1	0	0	0	2	0	0	0	1	0	0	1	1	11	
5:15 PM	0	1	3	1	0	0	0	0	0	0	3	0	0	1	0	0	9	
5:20 PM	0	1	2	0	0	0	0	0	0	0	2	0	0	0	0	2	7	
5:25 PM	0	1	1	0	0	0	1	0	0	0	2	0	0	0	0	0	5	
5:30 PM	0	1	3	0	0	1	2	0	0	1	6	0	0	0	0	2	16	
5:35 PM	0	1	3	0	0	0	1	0	0	1	0	0	0	0	0	0	6	
5:40 PM	0	2	3	0	0	0	1	0	0	0	3	1	0	0	1	0	11	
5:45 PM	0	1	0	0	0	0	0	0	0	0	2	0	0	0	0	1	4	
5:50 PM	0	1	0	0	0	1	0	0	0	1	2	1	0	0	0	0	6	
5:55 PM	0	0	0	1	0	0	1	0	0	0	1	1	0	0	0	0	4	
Count Total	0	17	55	12	1	10	30	6	0	15	49	19	0	4	20	19	257	
Peak Hour	0	7	28	9	0	7	22	3	0	10	27	15	0	1	15	11	155	

Location: 5 NE 2nd St & NE Hawthorne Ave PM

Traffic Counts - Heavy Vehicles, Bicycles on Road, and Pedestrians/Bicycles on Crosswalk

Interval Start Time	Heavy Vehicles					Interval Start Time	Bicycles on Roadway					Interval Start Time	Pedestrians/Bicycles on Crosswalk				
	EB	NB	WB	SB	Total		EB	NB	WB	SB	Total		EB	NB	WB	SB	Total
4:00 PM	0	0	0	0	0	4:00 PM	0	0	0	0	0	4:00 PM	2	0	1	1	4
4:05 PM	0	0	0	0	0	4:05 PM	0	0	0	0	0	4:05 PM	5	1	2	0	8
4:10 PM	0	0	0	0	0	4:10 PM	0	1	0	0	1	4:10 PM	1	0	0	1	2
4:15 PM	0	0	0	0	0	4:15 PM	0	0	0	0	0	4:15 PM	2	0	0	0	2
4:20 PM	0	0	0	0	0	4:20 PM	0	0	0	0	0	4:20 PM	0	0	0	0	0
4:25 PM	0	0	0	0	0	4:25 PM	0	0	0	0	0	4:25 PM	2	0	0	0	2
4:30 PM	0	0	0	0	0	4:30 PM	0	1	0	0	1	4:30 PM	2	0	4	2	8
4:35 PM	0	0	0	0	0	4:35 PM	0	0	0	0	0	4:35 PM	1	0	0	0	1
4:40 PM	0	0	0	0	0	4:40 PM	0	0	1	0	1	4:40 PM	0	0	0	0	0
4:45 PM	0	0	0	0	0	4:45 PM	0	0	0	0	0	4:45 PM	0	0	0	1	1
4:50 PM	0	0	0	0	0	4:50 PM	0	0	0	0	0	4:50 PM	0	0	0	0	0
4:55 PM	0	1	0	0	1	4:55 PM	0	0	0	0	0	4:55 PM	0	1	1	0	2
5:00 PM	0	0	0	0	0	5:00 PM	0	0	0	0	0	5:00 PM	0	0	0	0	0
5:05 PM	0	0	0	0	0	5:05 PM	0	0	0	0	0	5:05 PM	1	1	0	0	2
5:10 PM	0	0	0	0	0	5:10 PM	0	0	0	0	0	5:10 PM	2	0	0	2	4
5:15 PM	2	0	0	0	2	5:15 PM	0	0	1	0	1	5:15 PM	0	0	0	0	0
5:20 PM	0	0	0	0	0	5:20 PM	0	0	0	0	0	5:20 PM	1	0	0	0	1
5:25 PM	0	0	0	0	0	5:25 PM	0	0	0	1	1	5:25 PM	0	0	1	1	2
5:30 PM	0	0	0	0	0	5:30 PM	0	0	0	1	1	5:30 PM	0	0	0	1	1
5:35 PM	0	0	0	0	0	5:35 PM	0	2	0	0	2	5:35 PM	1	0	0	1	2
5:40 PM	0	0	0	0	0	5:40 PM	0	0	1	0	1	5:40 PM	1	0	0	0	1
5:45 PM	0	0	0	0	0	5:45 PM	0	0	0	0	0	5:45 PM	0	1	0	0	1
5:50 PM	0	0	1	0	1	5:50 PM	0	0	0	1	1	5:50 PM	1	0	0	0	1
5:55 PM	0	1	0	0	1	5:55 PM	1	0	0	0	1	5:55 PM	0	1	2	0	3
Count Total	2	2	1	0	5	Count Total	1	4	3	3	11	Count Total	22	5	11	10	48
Peak Hour	0	1	0	0	1	Peak Hour	0	2	1	0	3	Peak Hour	15	2	8	5	30

Location: 6 NW Harriman St & NW Franklin Ave PM

ALL TRAFFIC DATA SERVICES
(303) 216-2439
www.alltrafficdata.net

Location: 6 NW Harriman St & NW Franklin Ave PM
Date: Tuesday, March 8, 2022
Peak Hour: 04:25 PM - 05:25 PM
Peak 15-Minutes: 05:05 PM - 05:20 PM

Peak Hour

Motorized Vehicles

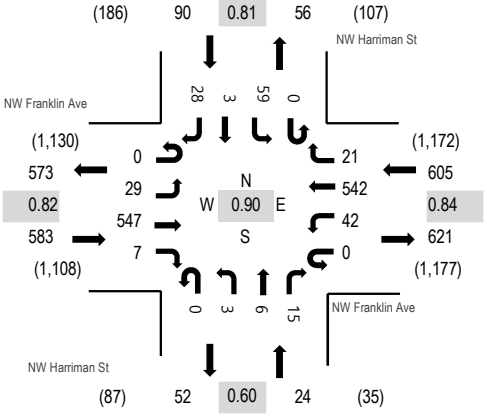

Heavy Vehicles

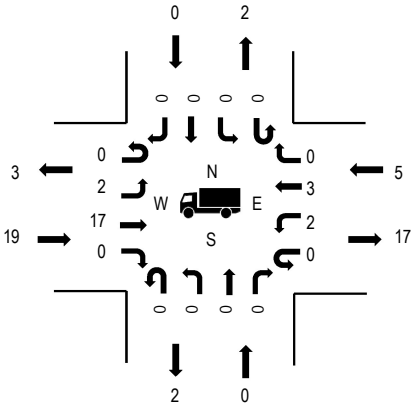

Pedestrians

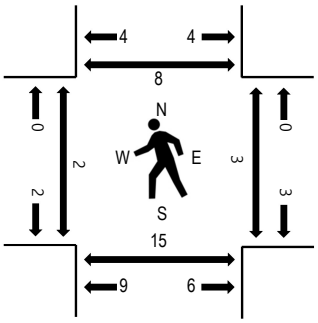

Note: Total study counts contained in parentheses.

	HV%	PHF
EB	3.3%	0.82
WB	0.8%	0.84
NB	0.0%	0.60
SB	0.0%	0.81
All	1.8%	0.90

Traffic Counts - Motorized Vehicles

Interval Start Time	NW Franklin Ave Eastbound				NW Franklin Ave Westbound				NW Harriman St Northbound				NW Harriman St Southbound				Total	Rolling Hour
	U-Turn	Left	Thru	Right	U-Turn	Left	Thru	Right	U-Turn	Left	Thru	Right	U-Turn	Left	Thru	Right		
4:00 PM	0	2	54	0	0	3	40	4	0	0	1	1	0	5	1	5	116	1,301
4:05 PM	0	4	41	0	0	4	60	2	0	0	2	2	0	4	1	6	126	1,288
4:10 PM	0	3	44	0	0	4	55	1	0	0	0	0	0	7	0	1	115	1,273
4:15 PM	0	4	46	0	0	1	57	0	0	0	0	0	0	8	0	4	120	1,276
4:20 PM	0	0	42	1	0	3	35	1	0	0	0	0	0	4	1	2	89	1,287
4:25 PM	0	3	49	1	0	4	42	1	0	0	0	0	0	3	0	2	105	1,302
4:30 PM	0	2	43	2	0	4	34	3	0	1	1	0	0	10	0	2	102	1,283
4:35 PM	0	2	44	1	0	2	46	2	0	1	0	2	0	5	0	2	107	1,277
4:40 PM	0	0	37	0	0	3	47	3	0	0	1	2	0	2	2	1	98	1,268
4:45 PM	0	1	47	1	0	4	49	3	0	0	1	1	0	6	0	3	116	1,256
4:50 PM	0	2	43	1	0	4	53	1	0	0	1	4	0	3	0	3	115	1,226
4:55 PM	0	3	38	0	0	5	34	3	0	0	0	1	0	6	0	2	92	1,212
5:00 PM	0	4	40	0	0	3	45	0	0	1	1	1	0	5	0	3	103	1,200
5:05 PM	0	6	58	0	0	1	41	1	0	0	0	1	0	3	0	0	111	
5:10 PM	0	3	53	0	0	5	50	2	0	0	0	1	0	2	0	2	118	
5:15 PM	0	0	59	1	0	5	53	0	0	0	1	1	0	5	1	5	131	
5:20 PM	0	3	36	0	0	2	48	2	0	0	0	1	0	9	0	3	104	
5:25 PM	0	1	37	0	0	1	41	1	0	0	0	0	0	2	0	3	86	
5:30 PM	0	5	32	0	0	1	44	2	0	0	0	0	0	9	0	3	96	
5:35 PM	0	3	49	0	0	0	40	0	0	0	0	1	0	3	1	1	98	
5:40 PM	0	2	45	0	0	1	26	2	0	0	0	1	0	4	0	5	86	
5:45 PM	0	2	31	0	0	5	38	3	0	0	0	1	0	4	0	2	86	
5:50 PM	0	1	46	0	0	3	44	1	0	0	0	0	0	1	1	4	101	
5:55 PM	0	2	28	0	0	2	40	2	0	0	0	2	0	2	1	1	80	
Count Total	0	58	1,042	8	0	70	1,062	40	0	3	9	23	0	112	9	65	2,501	
Peak Hour	0	29	547	7	0	42	542	21	0	3	6	15	0	59	3	28	1,302	

Location: 6 NW Harriman St & NW Franklin Ave PM

Traffic Counts - Heavy Vehicles, Bicycles on Road, and Pedestrians/Bicycles on Crosswalk

Interval Start Time	Heavy Vehicles					Interval Start Time	Bicycles on Roadway					Interval Start Time	Pedestrians/Bicycles on Crosswalk				
	EB	NB	WB	SB	Total		EB	NB	WB	SB	Total		EB	NB	WB	SB	Total
4:00 PM	1	0	0	0	1	4:00 PM	2	0	1	0	3	4:00 PM	0	0	0	2	2
4:05 PM	0	0	1	0	1	4:05 PM	0	0	2	1	3	4:05 PM	0	0	0	1	1
4:10 PM	1	0	0	0	1	4:10 PM	0	0	0	0	0	4:10 PM	0	0	0	0	0
4:15 PM	0	0	0	0	0	4:15 PM	0	0	0	0	0	4:15 PM	0	0	0	1	1
4:20 PM	1	0	0	0	1	4:20 PM	0	0	0	0	0	4:20 PM	0	0	0	0	0
4:25 PM	3	0	0	0	3	4:25 PM	0	0	0	0	0	4:25 PM	0	0	0	2	2
4:30 PM	1	0	1	0	2	4:30 PM	0	0	0	0	0	4:30 PM	0	2	1	1	4
4:35 PM	2	0	0	0	2	4:35 PM	1	0	1	0	2	4:35 PM	0	0	0	2	2
4:40 PM	2	0	2	0	4	4:40 PM	0	0	0	0	0	4:40 PM	0	0	1	0	1
4:45 PM	2	0	0	0	2	4:45 PM	0	0	2	0	2	4:45 PM	0	2	0	0	2
4:50 PM	1	0	0	0	1	4:50 PM	1	0	0	0	1	4:50 PM	0	0	0	0	0
4:55 PM	1	0	1	0	2	4:55 PM	1	0	0	0	1	4:55 PM	0	2	0	0	2
5:00 PM	2	0	0	0	2	5:00 PM	0	0	0	0	0	5:00 PM	2	2	0	0	4
5:05 PM	3	0	0	0	3	5:05 PM	0	0	1	0	1	5:05 PM	0	0	1	1	2
5:10 PM	2	0	1	0	3	5:10 PM	0	0	0	0	0	5:10 PM	0	2	0	1	3
5:15 PM	0	0	0	0	0	5:15 PM	0	0	0	0	0	5:15 PM	0	4	0	1	5
5:20 PM	0	0	0	0	0	5:20 PM	1	0	0	0	1	5:20 PM	0	2	1	3	6
5:25 PM	0	0	1	0	1	5:25 PM	0	0	0	0	0	5:25 PM	0	2	1	0	3
5:30 PM	0	0	0	0	0	5:30 PM	0	0	0	0	0	5:30 PM	0	0	0	2	2
5:35 PM	0	0	0	0	0	5:35 PM	0	0	0	0	0	5:35 PM	0	2	0	0	2
5:40 PM	0	0	0	0	0	5:40 PM	0	0	2	0	2	5:40 PM	0	0	0	1	1
5:45 PM	1	0	0	0	1	5:45 PM	0	0	0	0	0	5:45 PM	0	4	1	0	5
5:50 PM	1	0	0	0	1	5:50 PM	0	0	1	0	1	5:50 PM	0	0	0	1	1
5:55 PM	0	0	0	0	0	5:55 PM	0	0	0	0	0	5:55 PM	0	1	0	1	2
Count Total	24	0	7	0	31	Count Total	6	0	10	1	17	Count Total	2	25	6	20	53
Peak Hour	19	0	5	0	24	Peak Hour	4	0	4	0	8	Peak Hour	2	16	4	11	33

All Traffic Data Services, LLC
alltrafficdata.net

Date Start: 08-Mar-22
Date End: 10-Mar-22
NW Hawthorne Ave E-O NW Hill St

EB

Start Time	Motorcycl	Cars & Trailers	2 Axle Long	Buses	2 Axle 6 Tire	3 Axle Single	4 Axle Single	<5 Axl Double	5 Axle Double	>6 Axl Double	<6 Axl Multi	6 Axle Multi	>6 Axl Multi	Not Classed	Total
03/08/22	0	8	0	0	0	0	0	0	0	0	0	0	0	1	9
01:00	0	6	2	0	0	0	0	0	0	0	0	0	0	0	8
02:00	0	2	0	0	1	0	0	0	0	0	0	0	0	0	3
03:00	0	1	0	0	1	0	0	0	0	0	0	0	0	0	2
04:00	0	2	0	0	0	0	0	0	0	0	0	0	0	0	2
05:00	0	5	3	0	2	0	0	0	0	0	0	0	0	0	10
06:00	2	15	2	0	3	0	0	0	0	0	0	0	0	2	24
07:00	0	34	9	1	7	0	0	0	0	0	0	0	0	6	57
08:00	1	39	14	0	9	0	0	2	0	0	0	0	0	7	72
09:00	0	40	15	0	10	0	0	0	0	0	0	0	0	7	72
10:00	0	50	8	0	6	0	0	1	0	0	0	0	0	2	67
11:00	2	81	17	0	12	0	0	0	0	0	0	0	0	8	120
12 PM	0	78	29	1	15	0	0	0	1	0	0	0	0	6	130
13:00	1	107	21	0	7	1	0	2	0	0	0	0	0	8	147
14:00	0	83	22	0	9	0	0	0	0	0	0	0	0	7	121
15:00	0	121	16	0	13	1	0	0	0	0	0	0	0	5	156
16:00	1	116	29	1	12	1	0	0	0	0	0	0	0	7	167
17:00	0	133	25	0	8	0	0	0	0	0	0	0	0	6	172
18:00	0	93	17	0	1	0	0	0	0	0	0	0	0	2	113
19:00	0	70	11	0	4	0	0	0	0	0	0	0	0	5	90
20:00	0	48	9	0	2	0	0	0	0	0	0	0	0	0	59
21:00	0	54	5	0	4	0	0	0	0	0	0	0	0	0	63
22:00	0	30	9	0	0	0	0	0	0	0	0	0	0	0	39
23:00	2	8	2	0	0	0	0	0	0	0	0	0	0	1	13
Total	9	1224	265	3	126	3	0	5	1	0	0	0	0	80	1716
Percent	0.5%	71.3%	15.4%	0.2%	7.3%	0.2%	0.0%	0.3%	0.1%	0.0%	0.0%	0.0%	0.0%	4.7%	
AM Peak	06:00	11:00	11:00	07:00	11:00			08:00						11:00	
Vol.	2	81	17	1	12			2						8	
PM Peak	23:00	17:00	12:00	12:00	12:00	13:00		13:00	12:00					13:00	
Vol.	2	133	29	1	15	1		2	1					8	

All Traffic Data Services, LLC
alltrafficdata.net

Date Start: 08-Mar-22
Date End: 10-Mar-22
NW Hawthorne Ave E-O NW Hill St

EB

Start Time	Motorcycl	Cars & Trailers	2 Axle Long	Buses	2 Axle 6 Tire	3 Axle Single	4 Axle Single	<5 Axl Double	5 Axle Double	>6 Axl Double	<6 Axl Multi	6 Axle Multi	>6 Axl Multi	Not Classed	Total
03/09/22	0	6	2	0	0	0	0	0	0	0	0	0	0	0	8
01:00	0	0	0	0	0	0	0	0	0	0	0	0	0	0	0
02:00	0	6	0	0	0	0	0	0	0	0	0	0	0	0	6
03:00	0	1	0	0	0	0	0	0	0	0	0	0	0	0	1
04:00	0	1	0	0	1	0	0	0	0	0	0	0	0	0	2
05:00	0	4	1	0	4	0	0	0	0	0	0	0	0	0	9
06:00	0	19	5	0	2	0	0	0	0	0	0	0	0	0	26
07:00	1	32	7	1	7	0	0	0	0	0	0	0	0	0	48
08:00	0	34	14	1	6	0	0	0	0	0	0	0	0	7	62
09:00	0	42	20	0	11	0	0	0	0	0	0	0	0	4	77
10:00	1	53	16	0	8	0	0	1	0	0	0	0	0	7	86
11:00	0	78	22	0	6	0	0	0	0	0	0	0	0	2	108
12 PM	1	86	30	1	4	0	0	0	0	0	0	0	0	6	128
13:00	3	93	15	0	9	1	0	0	0	0	0	0	0	9	130
14:00	3	80	23	1	10	1	0	0	0	0	0	0	0	7	125
15:00	0	100	24	2	10	0	0	1	0	0	0	0	0	4	141
16:00	1	100	31	0	11	1	0	0	0	0	0	0	0	3	147
17:00	0	111	24	0	3	0	0	0	0	0	0	0	0	5	143
18:00	0	95	16	0	5	0	0	0	0	0	0	0	0	2	118
19:00	0	79	16	0	1	0	0	0	0	0	0	0	0	2	98
20:00	0	73	14	0	5	0	0	0	0	0	0	0	0	1	93
21:00	0	49	7	0	2	0	0	0	0	0	0	0	0	0	58
22:00	0	24	3	0	2	0	0	0	0	0	0	0	0	0	29
23:00	0	11	6	0	1	0	0	0	0	0	0	0	0	0	18
Total	10	1177	296	6	108	3	0	2	0	0	0	0	0	59	1661
Percent	0.6%	70.9%	17.8%	0.4%	6.5%	0.2%	0.0%	0.1%	0.0%	0.0%	0.0%	0.0%	0.0%	3.6%	
AM Peak	07:00	11:00	11:00	07:00	09:00			10:00						08:00	
Vol.	1	78	22	1	11			1						7	
PM Peak	13:00	17:00	16:00	15:00	16:00	13:00		15:00						13:00	
Vol.	3	111	31	2	11	1		1						9	

All Traffic Data Services, LLC
alltrafficdata.net

Date Start: 08-Mar-22
Date End: 10-Mar-22
NW Hawthorne Ave E-O NW Hill St

EB

Start Time	Motorcycl	Cars & Trailers	2 Axle Long	Buses	2 Axle 6 Tire	3 Axle Single	4 Axle Single	<5 Axl Double	5 Axle Double	>6 Axl Double	<6 Axl Multi	6 Axle Multi	>6 Axl Multi	Not Classed	Total
03/10/22	0	9	3	0	0	0	0	0	0	0	0	0	0	0	12
01:00	0	4	1	0	0	0	0	0	0	0	0	0	0	0	5
02:00	0	3	0	0	0	0	0	0	0	0	0	0	0	0	3
03:00	0	2	0	0	1	0	0	0	0	0	0	0	0	0	3
04:00	0	2	0	0	0	0	0	0	0	0	0	0	0	0	2
05:00	0	3	2	0	4	0	0	0	0	0	0	0	0	0	9
06:00	0	15	4	0	1	0	0	0	0	0	0	0	0	0	20
07:00	2	30	11	0	6	0	0	0	0	0	0	0	0	4	53
08:00	0	46	17	2	4	0	0	1	0	0	0	0	0	3	73
09:00	0	49	18	0	8	0	0	0	1	0	0	0	0	5	81
10:00	1	51	19	1	10	0	0	0	0	0	0	0	0	5	87
11:00	1	77	18	0	8	0	0	0	0	0	0	0	0	3	107
12 PM	1	84	24	0	7	0	0	0	0	0	0	0	0	8	124
13:00	0	99	14	0	6	0	0	1	0	0	0	0	0	8	128
14:00	0	87	25	0	6	0	0	0	0	0	0	0	0	11	129
15:00	0	96	23	1	12	0	0	1	0	0	0	0	0	7	140
16:00	0	118	21	0	11	0	0	0	0	0	0	0	0	14	164
17:00	1	113	29	0	2	0	0	1	0	0	0	0	0	21	167
18:00	1	106	19	0	9	1	0	1	0	0	0	0	0	4	141
19:00	0	90	15	0	3	0	0	0	0	0	0	0	0	1	109
20:00	0	69	5	0	4	0	0	0	0	0	0	0	0	7	85
21:00	0	62	10	0	5	0	0	0	0	0	0	0	0	2	79
22:00	1	34	3	0	1	0	0	0	0	0	0	0	0	2	41
23:00	0	17	10	0	1	0	0	0	0	0	0	0	0	1	29
Total	8	1266	291	4	109	1	0	5	1	0	0	0	0	106	1791
Percent	0.4%	70.7%	16.2%	0.2%	6.1%	0.1%	0.0%	0.3%	0.1%	0.0%	0.0%	0.0%	0.0%	5.9%	
AM Peak	07:00	11:00	10:00	08:00	10:00			08:00	09:00					09:00	
Vol.	2	77	19	2	10			1	1					5	
PM Peak	12:00	16:00	17:00	15:00	15:00	18:00		13:00						17:00	
Vol.	1	118	29	1	12	1		1						21	
Grand Total	27	3667	852	13	343	7	0	12	2	0	0	0	0	245	5168
Percent	0.5%	71.0%	16.5%	0.3%	6.6%	0.1%	0.0%	0.2%	0.0%	0.0%	0.0%	0.0%	0.0%	4.7%	

All Traffic Data Services, LLC
alltrafficdata.net

Date Start: 08-Mar-22
Date End: 10-Mar-22
NW Hawthorne Ave E-O NW Hill St

WB

Start Time	Motorcycl	Cars & Trailers	2 Axle Long	Buses	2 Axle 6 Tire	3 Axle Single	4 Axle Single	<5 Axl Double	5 Axle Double	>6 Axl Double	<6 Axl Multi	6 Axle Multi	>6 Axl Multi	Not Classed	Total
03/08/22	0	14	1	0	0	0	0	0	0	0	0	0	0	0	15
01:00	0	7	2	0	0	0	0	0	0	0	0	0	0	0	9
02:00	0	3	1	0	0	0	0	0	0	0	0	0	0	0	4
03:00	0	8	2	0	1	0	0	0	1	0	0	0	0	0	12
04:00	0	8	9	0	1	0	0	0	0	0	0	0	0	0	18
05:00	0	31	11	0	5	0	0	1	0	0	0	0	0	0	48
06:00	0	102	48	1	11	1	0	3	0	0	0	0	0	6	172
07:00	0	188	67	1	16	1	0	3	0	0	0	0	0	6	282
08:00	2	185	46	0	24	0	0	2	0	0	0	0	0	7	266
09:00	1	144	44	1	17	2	0	0	0	0	0	0	0	5	214
10:00	0	123	34	0	21	0	1	2	0	0	1	0	0	9	191
11:00	3	144	39	0	14	2	0	1	0	0	0	0	0	6	209
12 PM	2	140	35	1	12	0	0	1	0	0	0	0	0	5	196
13:00	2	153	60	0	16	0	0	0	0	0	0	0	0	5	236
14:00	1	139	46	2	10	0	0	2	1	0	0	0	0	11	212
15:00	1	158	52	0	6	0	0	2	0	0	0	0	0	6	225
16:00	0	153	46	3	18	0	0	0	0	0	0	0	0	11	231
17:00	0	152	46	0	10	1	0	1	0	0	0	0	0	6	216
18:00	0	83	12	0	6	0	0	0	0	0	0	0	0	6	107
19:00	0	61	15	2	4	0	0	0	0	0	0	0	0	0	82
20:00	0	17	8	0	3	0	0	0	0	0	0	0	0	0	28
21:00	0	18	4	0	2	0	0	0	0	0	0	0	0	2	26
22:00	0	14	4	0	2	0	0	0	0	0	0	0	0	0	20
23:00	0	8	0	0	0	0	0	0	0	1	0	0	0	0	9
Total	12	2053	632	11	199	7	1	18	2	1	1	0	0	91	3028
Percent	0.4%	67.8%	20.9%	0.4%	6.6%	0.2%	0.0%	0.6%	0.1%	0.0%	0.0%	0.0%	0.0%	3.0%	
AM Peak	11:00	07:00	07:00	06:00	08:00	09:00	10:00	06:00	03:00		10:00			10:00	
Vol.	3	188	67	1	24	2	1	3	1		1			9	
PM Peak	12:00	15:00	13:00	16:00	16:00	17:00		14:00	14:00	23:00				14:00	
Vol.	2	158	60	3	18	1		2	1	1				11	

All Traffic Data Services, LLC
alltrafficdata.net

Date Start: 08-Mar-22
Date End: 10-Mar-22
NW Hawthorne Ave E-O NW Hill St

WB

Start Time	Motorcycl	Cars & Trailers	2 Axle Long	Buses	2 Axle 6 Tire	3 Axle Single	4 Axle Single	<5 Axl Double	5 Axle Double	>6 Axl Double	<6 Axl Multi	6 Axle Multi	>6 Axl Multi	Not Classed	Total
03/09/22	0	4	0	0	0	0	0	0	0	0	0	0	0	0	4
01:00	0	4	1	0	0	0	0	0	0	0	0	0	0	0	5
02:00	0	2	0	0	0	0	0	0	0	0	0	0	0	0	2
03:00	0	4	2	0	0	0	0	0	1	0	0	0	0	0	7
04:00	0	6	6	0	3	0	0	0	1	0	0	0	0	0	16
05:00	1	24	20	1	7	0	0	0	0	0	0	0	0	0	53
06:00	0	73	42	1	9	1	0	1	0	0	0	0	0	0	127
07:00	2	157	71	1	15	0	0	5	0	0	0	0	0	5	256
08:00	1	176	60	1	11	1	0	3	0	0	0	0	0	9	262
09:00	0	151	52	4	22	0	0	1	0	0	0	0	0	1	231
10:00	1	100	29	1	12	0	0	3	2	0	0	0	0	8	156
11:00	2	132	52	1	18	0	0	0	0	0	0	0	0	8	213
12 PM	2	137	50	1	8	1	0	1	0	0	0	0	0	7	207
13:00	1	115	30	0	13	0	0	3	0	0	0	0	0	8	170
14:00	1	125	36	3	15	0	0	2	0	0	0	0	0	10	192
15:00	0	160	40	0	19	0	0	1	0	0	0	0	0	6	226
16:00	1	131	42	3	13	1	0	2	0	0	0	0	0	2	195
17:00	0	148	35	1	11	0	0	0	0	0	0	0	0	4	199
18:00	0	135	25	1	12	0	0	0	0	0	0	0	0	2	175
19:00	0	66	14	1	5	0	0	0	0	0	0	0	0	1	87
20:00	0	33	12	0	7	0	0	0	0	0	0	0	0	2	54
21:00	0	16	2	0	1	0	0	0	0	0	0	0	0	0	19
22:00	0	16	1	0	0	0	0	0	0	0	0	0	0	0	17
23:00	0	8	1	0	0	0	0	0	0	0	0	0	0	0	9
Total	12	1923	623	20	201	4	0	22	4	0	0	0	0	73	2882
Percent	0.4%	66.7%	21.6%	0.7%	7.0%	0.1%	0.0%	0.8%	0.1%	0.0%	0.0%	0.0%	0.0%	2.5%	
AM Peak	07:00	08:00	07:00	09:00	09:00	06:00		07:00	10:00					08:00	
Vol.	2	176	71	4	22	1		5	2					9	
PM Peak	12:00	15:00	12:00	14:00	15:00	12:00		13:00						14:00	
Vol.	2	160	50	3	19	1		3						10	

All Traffic Data Services, LLC
alltrafficdata.net

Date Start: 08-Mar-22
Date End: 10-Mar-22
NW Hawthorne Ave E-O NW Hill St

WB

Start Time	Motorcycl	Cars & Trailers	2 Axle Long	Buses	2 Axle 6 Tire	3 Axle Single	4 Axle Single	<5 Axl Double	5 Axle Double	>6 Axl Double	<6 Axl Multi	6 Axle Multi	>6 Axl Multi	Not Classed	Total
03/10/22	0	12	2	0	0	0	0	0	0	0	0	0	0	0	14
01:00	0	5	1	0	0	0	0	0	0	0	0	0	0	0	6
02:00	0	2	0	0	1	0	0	0	0	0	0	0	0	0	3
03:00	0	3	2	0	0	0	0	0	1	0	0	0	0	0	6
04:00	0	6	3	0	1	0	0	0	0	0	0	0	0	0	10
05:00	0	32	19	0	6	1	0	0	0	0	0	0	0	1	59
06:00	0	87	42	1	6	0	0	1	1	0	0	0	0	2	140
07:00	0	166	64	2	19	0	0	3	0	1	0	0	0	5	260
08:00	1	185	67	0	22	0	0	1	0	0	0	0	0	7	283
09:00	1	155	36	1	21	0	0	0	1	0	0	0	0	7	222
10:00	0	129	36	0	22	0	0	1	0	0	0	0	0	8	196
11:00	0	149	50	1	12	0	0	2	0	0	0	0	0	4	218
12 PM	1	126	45	0	15	0	0	0	0	0	0	0	0	8	195
13:00	1	153	33	0	17	0	0	2	0	0	0	0	0	9	215
14:00	1	145	33	0	14	2	0	2	0	0	0	0	0	12	209
15:00	1	135	43	0	22	0	0	4	0	0	0	0	0	3	208
16:00	2	162	23	1	10	1	0	1	0	2	0	0	0	13	215
17:00	3	128	40	0	13	0	0	0	0	0	0	0	0	10	194
18:00	0	130	26	2	9	0	0	0	0	0	0	0	0	2	169
19:00	2	67	18	1	5	0	0	0	0	0	0	0	0	3	96
20:00	0	48	7	0	1	0	0	0	0	0	0	0	0	4	60
21:00	0	32	4	0	3	0	0	0	0	1	0	0	0	1	41
22:00	0	26	3	0	2	0	0	0	0	0	0	0	0	1	32
23:00	2	11	4	0	2	0	0	0	0	0	0	0	0	3	22
Total	15	2094	601	9	223	4	0	17	3	4	0	0	0	103	3073
Percent	0.5%	68.1%	19.6%	0.3%	7.3%	0.1%	0.0%	0.6%	0.1%	0.1%	0.0%	0.0%	0.0%	3.4%	
AM Peak	08:00	08:00	08:00	07:00	08:00	05:00		07:00	03:00	07:00				10:00	
Vol.	1	185	67	2	22	1		3	1	1				8	
PM Peak	17:00	16:00	12:00	18:00	15:00	14:00		15:00		16:00				16:00	
Vol.	3	162	45	2	22	2		4		2				13	
Grand Total	39	6070	1856	40	623	15	1	57	9	5	1	0	0	267	8983
Percent	0.4%	67.6%	20.7%	0.4%	6.9%	0.2%	0.0%	0.6%	0.1%	0.1%	0.0%	0.0%	0.0%	3.0%	

All Traffic Data Services, LLC
alltrafficdata.net

Date Start: 08-Mar-22
Date End: 10-Mar-22
NW Hawthorne Ave E-O NW Hill St

EB

Start Time	1 15	16 20	21 25	26 30	31 35	36 40	41 45	46 50	51 55	56 60	61 65	66 70	71 9999	Total	85th Percent	95th Percent
03/08/22	2	2	4	0	**1**	0	0	0	0	0	0	0	0	9	24	32
01:00	2	1	3	2	0	0	0	0	0	0	0	0	0	8	27	28
02:00	2	0	1	0	0	0	0	0	0	0	0	0	0	3	22	24
03:00	1	1	0	0	0	0	0	0	0	0	0	0	0	2	18	19
04:00	0	2	0	0	0	0	0	0	0	0	0	0	0	2	19	19
05:00	3	3	3	1	0	0	0	0	0	0	0	0	0	10	24	27
06:00	11	8	2	3	0	0	0	0	0	0	0	0	0	24	23	28
07:00	23	22	8	3	1	0	0	0	0	0	0	0	0	57	22	26
08:00	26	26	15	5	0	0	0	0	0	0	0	0	0	72	23	26
09:00	29	25	15	3	0	0	0	0	0	0	0	0	0	72	22	24
10:00	14	37	13	3	0	0	0	0	0	0	0	0	0	67	22	24
11:00	**41**	**49**	**22**	**7**	1	0	0	0	0	0	0	0	0	**120**	22	26
12 PM	38	58	28	5	1	0	0	0	0	0	0	0	0	130	22	24
13:00	44	59	35	9	0	0	0	0	0	0	0	0	0	147	23	25
14:00	34	54	30	3	0	0	0	0	0	0	0	0	0	121	22	24
15:00	37	71	35	**12**	0	**1**	0	0	0	0	0	0	0	156	23	27
16:00	47	**84**	31	5	0	0	0	0	0	0	0	0	0	167	21	24
17:00	**53**	72	**42**	5	0	0	0	0	0	0	0	0	0	**172**	22	24
18:00	22	54	28	8	1	0	0	0	0	0	0	0	0	113	23	27
19:00	18	30	35	5	2	0	0	0	0	0	0	0	0	90	24	27
20:00	14	21	15	8	1	0	0	0	0	0	0	0	0	59	25	28
21:00	8	17	26	11	1	0	0	0	0	0	0	0	0	63	26	29
22:00	5	10	15	4	**4**	1	0	0	0	0	0	0	0	39	28	33
23:00	5	3	3	2	0	0	0	0	0	0	0	0	0	13	25	28
Total	479	709	409	104	13	2	0	0	0	0	0	0	0	1716		
Percent	27.9%	41.3%	23.8%	6.1%	0.8%	0.1%	0.0%	0.0%	0.0%	0.0%	0.0%	0.0%	0.0%			
AM Peak	11:00	11:00	11:00	11:00	00:00									11:00		
Vol.	41	49	22	7	1									120		
PM Peak	17:00	16:00	17:00	15:00	22:00	15:00								17:00		
Vol.	53	84	42	12	4	1								172		

All Traffic Data Services, LLC
alltrafficdata.net

Date Start: 08-Mar-22
Date End: 10-Mar-22
NW Hawthorne Ave E-O NW Hill St

EB

Start Time	1 15	16 20	21 25	26 30	31 35	36 40	41 45	46 50	51 55	56 60	61 65	66 70	71 9999	Total	85th Percent	95th Percent
03/09/22	0	3	4	1	0	0	0	0	0	0	0	0	0	8	24	28
01:00	0	0	0	0	0	0	0	0	0	0	0	0	0	0	*	*
02:00	0	2	3	1	0	0	0	0	0	0	0	0	0	6	25	28
03:00	1	0	0	0	0	0	0	0	0	0	0	0	0	1	12	14
04:00	0	1	1	0	0	0	0	0	0	0	0	0	0	2	23	24
05:00	4	5	0	0	0	0	0	0	0	0	0	0	0	9	18	19
06:00	11	10	4	1	0	0	0	0	0	0	0	0	0	26	21	24
07:00	22	20	4	2	0	0	0	0	0	0	0	0	0	48	19	24
08:00	32	20	10	0	0	0	0	0	0	0	0	0	0	62	20	23
09:00	26	35	14	2	0	0	0	0	0	0	0	0	0	77	21	24
10:00	**36**	37	11	2	0	0	0	0	0	0	0	0	0	86	20	23
11:00	31	**51**	**21**	**5**	0	0	0	0	0	0	0	0	0	**108**	22	24
12 PM	**38**	53	33	4	0	0	0	0	0	0	0	0	0	128	22	24
13:00	30	65	28	7	0	0	0	0	0	0	0	0	0	130	22	25
14:00	35	50	30	10	0	0	0	0	0	0	0	0	0	125	23	26
15:00	32	**67**	32	10	0	0	0	0	0	0	0	0	0	141	23	26
16:00	37	66	30	**14**	0	0	0	0	0	0	0	0	0	**147**	23	27
17:00	33	61	35	14	0	0	0	0	0	0	0	0	0	143	23	27
18:00	25	44	**39**	10	0	0	0	0	0	0	0	0	0	118	24	27
19:00	16	36	35	11	0	0	0	0	0	0	0	0	0	98	24	27
20:00	20	41	26	6	0	0	0	0	0	0	0	0	0	93	23	26
21:00	6	24	18	10	0	0	0	0	0	0	0	0	0	58	25	28
22:00	2	13	9	4	**1**	0	0	0	0	0	0	0	0	29	25	29
23:00	1	5	6	6	0	0	0	0	0	0	0	0	0	18	27	29
Total	438	709	393	120	1	0	0	0	0	0	0	0	0	1661		
Percent	26.4%	42.7%	23.7%	7.2%	0.1%	0.0%	0.0%	0.0%	0.0%	0.0%	0.0%	0.0%	0.0%			
AM Peak	10:00	11:00	11:00	11:00										11:00		
Vol.	36	51	21	5										108		
PM Peak	12:00	15:00	18:00	16:00	22:00									16:00		
Vol.	38	67	39	14	1									147		

All Traffic Data Services, LLC
alltrafficdata.net

Date Start: 08-Mar-22
Date End: 10-Mar-22
NW Hawthorne Ave E-O NW Hill St

EB

Start Time	1 15	16 20	21 25	26 30	31 35	36 40	41 45	46 50	51 55	56 60	61 65	66 70	71 9999	Total	85th Percent	95th Percent
03/10/22	0	4	3	5	0	0	0	0	0	0	0	0	0	12	28	29
01:00	0	2	3	0	0	0	0	0	0	0	0	0	0	5	23	24
02:00	0	2	1	0	0	0	0	0	0	0	0	0	0	3	22	24
03:00	1	2	0	0	0	0	0	0	0	0	0	0	0	3	18	19
04:00	1	1	0	0	0	0	0	0	0	0	0	0	0	2	18	19
05:00	5	0	4	0	0	0	0	0	0	0	0	0	0	9	23	24
06:00	6	10	4	0	0	0	0	0	0	0	0	0	0	20	21	23
07:00	17	28	6	1	**1**	0	0	0	0	0	0	0	0	53	20	24
08:00	20	34	16	2	1	0	0	0	0	0	0	0	0	73	22	24
09:00	20	38	16	**7**	0	0	0	0	0	0	0	0	0	81	23	27
10:00	28	37	18	3	1	0	0	0	0	0	0	0	0	87	22	24
11:00	**31**	**45**	**24**	7	0	0	0	0	0	0	0	0	0	**107**	23	26
12 PM	35	59	22	7	1	0	0	0	0	0	0	0	0	124	22	26
13:00	19	**75**	25	9	0	0	0	0	0	0	0	0	0	128	22	26
14:00	44	56	26	3	0	0	0	0	0	0	0	0	0	129	21	24
15:00	47	56	33	4	0	0	0	0	0	0	0	0	0	140	22	24
16:00	50	71	29	**14**	0	0	0	0	0	0	0	0	0	164	23	27
17:00	**59**	69	30	9	0	0	0	0	0	0	0	0	0	**167**	22	25
18:00	38	60	28	11	**4**	0	0	0	0	0	0	0	0	141	23	28
19:00	29	43	**34**	3	0	0	0	0	0	0	0	0	0	109	23	24
20:00	21	33	22	8	1	0	0	0	0	0	0	0	0	85	24	27
21:00	17	29	23	8	2	0	0	0	0	0	0	0	0	79	24	28
22:00	8	9	14	9	1	0	0	0	0	0	0	0	0	41	27	29
23:00	4	4	10	10	1	0	0	0	0	0	0	0	0	29	28	29
Total	500	767	391	120	13	0	0	0	0	0	0	0	0	1791		
Percent	27.9%	42.8%	21.8%	6.7%	0.7%	0.0%	0.0%	0.0%	0.0%	0.0%	0.0%	0.0%	0.0%			
AM Peak	11:00	11:00	11:00	09:00	07:00									11:00		
Vol.	31	45	24	7	1									107		
PM Peak	17:00	13:00	19:00	16:00	18:00									17:00		
Vol.	59	75	34	14	4									167		
Grand Total	1417	2185	1193	344	27	2	0	0	0	0	0	0	0	5168		
Percent	27.4%	42.3%	23.1%	6.7%	0.5%	0.0%	0.0%	0.0%	0.0%	0.0%	0.0%	0.0%	0.0%			

	15th Percentile :	8 MPH
	50th Percentile :	17 MPH
	85th Percentile :	23 MPH
	95th Percentile :	26 MPH
Stats	10 MPH Pace Speed :	16-25 MPH
	Number in Pace :	3378
	Percent in Pace :	65.4%
	Number of Vehicles > 55 MPH :	0
	Percent of Vehicles > 55 MPH :	0.0%
	Mean Speed(Average) :	17 MPH

All Traffic Data Services, LLC
alltrafficdata.net

Date Start: 08-Mar-22
Date End: 10-Mar-22
NW Hawthorne Ave E-O NW Hill St

WB

Start Time	1 15	16 20	21 25	26 30	31 35	36 40	41 45	46 50	51 55	56 60	61 65	66 70	71 9999	Total	85th Percent	95th Percent
03/08/22	4	7	3	1	0	0	0	0	0	0	0	0	0	15	22	26
01:00	5	3	1	0	0	0	0	0	0	0	0	0	0	9	19	22
02:00	2	2	0	0	0	0	0	0	0	0	0	0	0	4	18	19
03:00	1	6	4	1	0	0	0	0	0	0	0	0	0	12	23	26
04:00	3	8	4	3	0	0	0	0	0	0	0	0	0	18	25	28
05:00	6	11	17	13	1	0	0	0	0	0	0	0	0	48	27	29
06:00	60	41	50	17	**4**	0	0	0	0	0	0	0	0	172	24	28
07:00	82	**82**	**85**	**32**	1	0	0	0	0	0	0	0	0	**282**	24	27
08:00	**107**	79	69	11	0	0	0	0	0	0	0	0	0	266	22	24
09:00	78	81	45	9	1	0	0	0	0	0	0	0	0	214	22	24
10:00	78	66	35	10	1	0	0	**1**	0	0	0	0	0	191	22	26
11:00	84	68	46	11	0	0	0	0	0	0	0	0	0	209	22	25
12 PM	79	59	43	**14**	**1**	0	0	0	0	0	0	0	0	196	23	26
13:00	**107**	72	46	11	0	0	0	0	0	0	0	0	0	**236**	22	24
14:00	98	**74**	30	10	0	0	0	0	0	0	0	0	0	212	21	24
15:00	105	64	43	12	1	0	0	0	0	0	0	0	0	225	22	25
16:00	107	67	48	9	0	0	0	0	0	0	0	0	0	231	22	24
17:00	95	63	**50**	8	0	0	0	0	0	0	0	0	0	216	22	24
18:00	36	33	31	7	0	0	0	0	0	0	0	0	0	107	23	26
19:00	23	35	16	7	1	0	0	0	0	0	0	0	0	82	23	27
20:00	6	10	9	3	0	0	0	0	0	0	0	0	0	28	24	27
21:00	6	8	8	3	1	0	0	0	0	0	0	0	0	26	25	29
22:00	8	5	6	1	0	0	0	0	0	0	0	0	0	20	23	25
23:00	4	2	2	0	1	0	0	0	0	0	0	0	0	9	24	32
Total	1184	946	691	193	13	0	0	1	0	0	0	0	0	3028		
Percent	39.1%	31.2%	22.8%	6.4%	0.4%	0.0%	0.0%	0.0%	0.0%	0.0%	0.0%	0.0%	0.0%			
AM Peak	08:00	07:00	07:00	07:00	06:00			10:00						07:00		
Vol.	107	82	85	32	4			1						282		
PM Peak	13:00	14:00	17:00	12:00	12:00									13:00		
Vol.	107	74	50	14	1									236		

All Traffic Data Services, LLC
alltrafficdata.net

Date Start: 08-Mar-22
Date End: 10-Mar-22
NW Hawthorne Ave E-O NW Hill St

WB

Start Time	1 15	16 20	21 25	26 30	31 35	36 40	41 45	46 50	51 55	56 60	61 65	66 70	71 9999	Total	85th Percent	95th Percent
03/09/22	2	1	1	0	0	0	0	0	0	0	0	0	0	4	22	23
01:00	0	2	2	1	0	0	0	0	0	0	0	0	0	5	26	28
02:00	2	0	0	0	0	0	0	0	0	0	0	0	0	2	12	14
03:00	2	4	0	1	0	0	0	0	0	0	0	0	0	7	19	28
04:00	8	3	4	1	0	0	0	0	0	0	0	0	0	16	23	26
05:00	18	12	12	10	1	0	0	0	0	0	0	0	0	53	26	29
06:00	61	28	28	9	1	0	0	0	0	0	0	0	0	127	23	27
07:00	101	73	61	16	**5**	0	0	0	0	0	0	0	0	256	23	27
08:00	**105**	68	**78**	10	1	0	0	0	0	0	0	0	0	**262**	23	24
09:00	84	72	57	**17**	1	0	0	0	0	0	0	0	0	231	23	26
10:00	65	49	36	6	0	0	0	0	0	0	0	0	0	156	22	24
11:00	80	**79**	42	12	0	0	0	0	0	0	0	0	0	213	22	25
12 PM	79	76	38	13	1	0	0	0	0	0	0	0	0	207	22	26
13:00	76	42	42	7	**3**	0	0	0	0	0	0	0	0	170	23	26
14:00	**101**	41	40	10	0	0	0	0	0	0	0	0	0	192	22	25
15:00	74	**82**	49	**19**	2	0	0	0	0	0	0	0	0	**226**	23	27
16:00	72	72	37	13	1	0	0	0	0	0	0	0	0	195	22	26
17:00	72	60	**52**	14	1	0	0	0	0	0	0	0	0	199	23	26
18:00	58	58	50	8	0	**1**	0	0	0	0	0	0	0	175	23	25
19:00	36	23	26	2	0	0	0	0	0	0	0	0	0	87	22	24
20:00	24	16	9	5	0	0	0	0	0	0	0	0	0	54	23	27
21:00	6	7	5	1	0	0	0	0	0	0	0	0	0	19	23	25
22:00	4	7	3	3	0	0	0	0	0	0	0	0	0	17	25	28
23:00	4	2	1	1	0	1	0	0	0	0	0	0	0	9	28	37
Total	1134	877	673	179	17	2	0	0	0	0	0	0	0	2882		
Percent	39.3%	30.4%	23.4%	6.2%	0.6%	0.1%	0.0%	0.0%	0.0%	0.0%	0.0%	0.0%	0.0%			
AM Peak	08:00	11:00	08:00	09:00	07:00									08:00		
Vol.	105	79	78	17	5									262		
PM Peak	14:00	15:00	17:00	15:00	13:00	18:00								15:00		
Vol.	101	82	52	19	3	1								226		

All Traffic Data Services, LLC
alltrafficdata.net

Date Start: 08-Mar-22
Date End: 10-Mar-22
NW Hawthorne Ave E-O NW Hill St

WB

Start Time	1 15	16 20	21 25	26 30	31 35	36 40	41 45	46 50	51 55	56 60	61 65	66 70	71 9999	Total	85th Percent	95th Percent
03/10/22	5	3	5	1	0	0	0	0	0	0	0	0	0	14	23	26
01:00	1	0	4	1	0	0	0	0	0	0	0	0	0	6	25	28
02:00	2	1	0	0	0	0	0	0	0	0	0	0	0	3	17	19
03:00	2	2	1	1	0	0	0	0	0	0	0	0	0	6	25	28
04:00	2	1	3	4	0	0	0	0	0	0	0	0	0	10	28	29
05:00	16	8	13	20	2	0	0	0	0	0	0	0	0	59	28	29
06:00	32	47	30	28	2	**1**	0	0	0	0	0	0	0	140	26	29
07:00	75	**95**	54	**32**	**4**	0	0	0	0	0	0	0	0	260	24	28
08:00	**77**	88	**87**	28	3	0	0	0	0	0	0	0	0	**283**	24	28
09:00	74	72	51	22	3	0	0	0	0	0	0	0	0	222	24	28
10:00	66	53	54	21	2	0	0	0	0	0	0	0	0	196	24	28
11:00	70	73	48	24	2	1	0	0	0	0	0	0	0	218	24	28
12 PM	85	52	42	15	1	0	0	0	0	0	0	0	0	195	23	27
13:00	76	**78**	**56**	5	0	0	0	0	0	0	0	0	0	**215**	22	24
14:00	70	70	50	**16**	**3**	0	0	0	0	0	0	0	0	209	23	27
15:00	83	66	40	16	3	0	0	0	0	0	0	0	0	208	23	27
16:00	**91**	73	41	10	0	0	0	0	0	0	0	0	0	215	22	24
17:00	87	65	33	8	1	0	0	0	0	0	0	0	0	194	21	24
18:00	63	50	48	8	0	0	0	0	0	0	0	0	0	169	23	24
19:00	39	26	25	6	0	0	0	0	0	0	0	0	0	96	23	25
20:00	19	14	18	7	2	0	0	0	0	0	0	0	0	60	25	29
21:00	17	9	10	4	1	0	0	0	0	0	0	0	0	41	24	28
22:00	12	10	8	2	0	0	0	0	0	0	0	0	0	32	23	25
23:00	13	1	4	2	1	0	0	0	0	0	0	0	**1**	22	24	29
Total	1077	957	725	281	30	2	0	0	0	0	0	0	1	3073		
Percent	35.0%	31.1%	23.6%	9.1%	1.0%	0.1%	0.0%	0.0%	0.0%	0.0%	0.0%	0.0%	0.0%			
AM Peak	08:00	07:00	08:00	07:00	07:00	06:00								08:00		
Vol.	77	95	87	32	4	1								283		
PM Peak	16:00	13:00	13:00	14:00	14:00								23:00	13:00		
Vol.	91	78	56	16	3								1	215		
Grand Total	3395	2780	2089	653	60	4	0	1	0	0	0	0	1	8983		
Percent	37.8%	30.9%	23.3%	7.3%	0.7%	0.0%	0.0%	0.0%	0.0%	0.0%	0.0%	0.0%	0.0%			

	15th Percentile :	5 MPH
	50th Percentile :	16 MPH
	85th Percentile :	23 MPH
	95th Percentile :	27 MPH
Stats	10 MPH Pace Speed :	16-25 MPH
	Number in Pace :	4869
	Percent in Pace :	54.2%
	Number of Vehicles > 55 MPH :	1
	Percent of Vehicles > 55 MPH :	0.0%
	Mean Speed(Average) :	16 MPH

All Traffic Data Services, LLC
alltrafficdata.net

Date Start: 08-Mar-22
Date End: 10-Mar-22
NW Hawthorne Ave W-O NW Hill St

EB

Start Time	Motorcycl	Cars & Trailers	2 Axle Long	Buses	2 Axle 6 Tire	3 Axle Single	4 Axle Single	<5 Axl Double	5 Axle Double	>6 Axl Double	<6 Axl Multi	6 Axle Multi	>6 Axl Multi	Not Classed	Total
03/08/22	0	5	0	0	0	0	0	0	0	0	0	0	0	0	5
01:00	0	5	1	0	0	0	0	0	0	0	0	0	0	0	6
02:00	0	0	1	0	0	0	0	0	0	0	0	0	0	0	1
03:00	0	1	0	0	0	0	0	0	0	0	0	0	0	0	1
04:00	0	2	0	0	1	0	0	0	0	0	0	0	0	0	3
05:00	0	2	2	0	1	1	0	0	0	0	0	0	0	0	6
06:00	1	8	1	1	0	1	0	0	0	0	0	0	0	0	12
07:00	3	15	2	0	2	0	0	1	0	0	0	0	0	0	23
08:00	1	26	8	0	3	0	0	2	0	0	0	0	0	3	43
09:00	1	40	14	0	0	0	0	0	0	0	0	0	0	3	58
10:00	1	46	14	0	10	0	0	0	0	0	0	0	0	4	75
11:00	1	62	14	0	8	0	0	1	0	0	0	0	0	5	91
12 PM	1	77	20	0	5	0	0	0	0	0	0	0	0	2	105
13:00	0	68	15	1	6	0	0	1	0	0	0	0	0	6	97
14:00	0	84	19	0	7	0	0	1	0	0	0	0	0	0	111
15:00	2	86	14	0	5	0	0	0	0	0	0	0	0	4	111
16:00	0	73	18	0	1	0	0	0	0	0	0	0	0	4	96
17:00	0	83	19	1	1	0	0	0	0	0	0	0	0	4	108
18:00	1	64	9	0	4	0	0	0	0	0	0	0	0	1	79
19:00	0	58	7	0	1	0	0	0	0	0	0	0	0	1	67
20:00	0	33	8	0	3	0	0	0	0	0	0	0	0	0	44
21:00	0	43	6	0	3	0	0	0	0	0	0	0	0	0	52
22:00	0	26	8	0	0	0	0	0	0	0	0	0	0	0	34
23:00	0	7	1	0	0	0	0	0	0	0	0	0	0	0	8
Total	12	914	201	3	61	2	0	6	0	0	0	0	0	37	1236
Percent	1.0%	73.9%	16.3%	0.2%	4.9%	0.2%	0.0%	0.5%	0.0%	0.0%	0.0%	0.0%	0.0%	3.0%	
AM Peak	07:00	11:00	09:00	06:00	10:00	05:00		08:00						11:00	
Vol.	3	62	14	1	10	1		2						5	
PM Peak	15:00	15:00	12:00	13:00	14:00			13:00						13:00	
Vol.	2	86	20	1	7			1						6	

All Traffic Data Services, LLC
alltrafficdata.net

Date Start: 08-Mar-22
Date End: 10-Mar-22
NW Hawthorne Ave W-O NW Hill St

EB

Start Time	Motorcycl	Cars & Trailers	2 Axle Long	Buses	2 Axle 6 Tire	3 Axle Single	4 Axle Single	<5 Axl Double	5 Axle Double	>6 Axl Double	<6 Axl Multi	6 Axle Multi	>6 Axl Multi	Not Classed	Total
03/09/22	0	4	1	0	0	0	0	0	0	0	0	0	0	0	5
01:00	0	2	0	0	0	0	0	0	0	0	0	0	0	0	2
02:00	0	1	1	0	0	0	0	0	0	0	0	0	0	0	2
03:00	0	0	0	0	0	0	0	0	0	0	0	0	0	0	0
04:00	0	0	0	0	1	0	0	0	0	0	0	0	0	0	1
05:00	0	0	0	0	0	0	0	0	0	0	0	0	0	0	0
06:00	1	8	2	0	1	0	0	0	0	0	0	0	0	0	12
07:00	2	16	7	1	1	2	0	0	0	0	0	0	0	0	29
08:00	0	31	8	0	2	0	0	0	0	0	0	0	0	1	42
09:00	0	40	14	0	8	0	0	0	0	0	0	0	0	3	65
10:00	0	48	19	0	3	1	0	1	0	0	0	0	0	6	78
11:00	0	43	15	0	6	0	0	0	0	0	0	0	0	4	68
12 PM	0	76	18	0	6	0	0	0	0	0	0	0	0	2	102
13:00	0	57	20	0	7	0	0	0	0	0	0	0	0	7	91
14:00	1	64	21	1	6	0	0	0	0	0	0	0	0	6	99
15:00	0	93	16	1	2	0	0	0	0	0	0	0	0	1	113
16:00	1	58	21	0	4	0	0	0	0	0	0	0	0	2	86
17:00	0	75	18	0	4	1	0	0	0	0	0	0	0	3	101
18:00	2	73	10	0	2	0	0	0	0	0	0	0	0	2	89
19:00	0	57	17	0	1	0	0	0	0	0	0	0	0	0	75
20:00	0	46	12	0	6	0	0	0	0	0	0	0	0	0	64
21:00	0	28	7	0	1	0	0	0	0	0	0	0	0	0	36
22:00	0	17	4	0	1	0	0	0	0	0	0	0	0	0	22
23:00	0	10	6	0	0	0	0	0	0	0	0	0	0	0	16
Total	7	847	237	3	62	4	0	1	0	0	0	0	0	37	1198
Percent	0.6%	70.7%	19.8%	0.3%	5.2%	0.3%	0.0%	0.1%	0.0%	0.0%	0.0%	0.0%	0.0%	3.1%	
AM Peak	07:00	10:00	10:00	07:00	09:00	07:00		10:00						10:00	
Vol.	2	48	19	1	8	2		1						6	
PM Peak	18:00	15:00	14:00	14:00	13:00	17:00								13:00	
Vol.	2	93	21	1	7	1								7	

All Traffic Data Services, LLC
alltrafficdata.net

Date Start: 08-Mar-22
Date End: 10-Mar-22
NW Hawthorne Ave W-O NW Hill St

EB

Start Time	Motorcycl	Cars & Trailers	2 Axle Long	Buses	2 Axle 6 Tire	3 Axle Single	4 Axle Single	<5 Axl Double	5 Axle Double	>6 Axl Double	<6 Axl Multi	6 Axle Multi	>6 Axl Multi	Not Classed	Total
03/10/22	0	9	3	0	2	0	0	0	0	0	0	0	0	0	14
01:00	0	3	1	0	0	0	0	0	0	0	0	0	0	0	4
02:00	0	2	0	0	0	0	0	0	0	0	0	0	0	0	2
03:00	0	1	0	0	0	0	0	0	0	0	0	0	0	0	1
04:00	0	0	0	0	1	0	0	0	0	0	0	0	0	0	1
05:00	0	1	0	0	3	0	0	0	0	0	0	0	0	0	4
06:00	0	5	0	0	0	0	0	0	0	0	0	0	0	0	5
07:00	0	20	4	0	2	0	0	0	0	0	0	0	0	0	26
08:00	1	36	7	0	3	0	0	1	0	0	0	0	0	1	49
09:00	1	47	16	0	4	0	0	0	0	0	0	0	0	2	70
10:00	0	51	18	0	6	0	0	0	0	0	0	0	0	0	75
11:00	1	55	15	0	4	0	0	0	0	0	0	0	0	6	81
12 PM	0	71	23	0	3	0	0	0	0	0	0	0	0	2	99
13:00	0	87	10	0	1	0	0	0	0	0	0	0	0	4	102
14:00	0	70	17	0	6	0	0	0	0	0	0	0	0	3	96
15:00	2	69	15	0	8	0	0	1	0	0	0	0	0	5	100
16:00	2	93	13	0	7	0	0	0	0	0	0	0	0	3	118
17:00	0	89	15	0	0	0	0	0	0	0	0	0	0	6	110
18:00	1	74	12	0	6	0	0	1	0	0	0	0	0	0	94
19:00	0	50	8	0	1	0	0	0	0	0	0	0	0	0	59
20:00	0	54	4	0	3	0	0	0	0	0	0	0	0	1	62
21:00	0	47	5	0	2	0	0	0	0	0	0	0	0	0	54
22:00	0	28	3	0	0	0	0	0	0	0	0	0	0	1	32
23:00	0	13	8	0	1	0	0	0	0	0	0	0	0	0	22
Total	8	975	197	0	63	0	0	3	0	0	0	0	0	34	1280
Percent	0.6%	76.2%	15.4%	0.0%	4.9%	0.0%	0.0%	0.2%	0.0%	0.0%	0.0%	0.0%	0.0%	2.7%	
AM Peak	08:00	11:00	10:00		10:00			08:00						11:00	
Vol.	1	55	18		6			1						6	
PM Peak	15:00	16:00	12:00		15:00			15:00						17:00	
Vol.	2	93	23		8			1						6	
Grand Total	27	2736	635	6	186	6	0	10	0	0	0	0	0	108	3714
Percent	0.7%	73.7%	17.1%	0.2%	5.0%	0.2%	0.0%	0.3%	0.0%	0.0%	0.0%	0.0%	0.0%	2.9%	

All Traffic Data Services, LLC
alltrafficdata.net

Date Start: 08-Mar-22
Date End: 10-Mar-22
NW Hawthorne Ave W-O NW Hill St

WB

Start Time	Motorcycl	Cars & Trailers	2 Axle Long	Buses	2 Axle 6 Tire	3 Axle Single	4 Axle Single	<5 Axl Double	5 Axle Double	>6 Axl Double	<6 Axl Multi	6 Axle Multi	>6 Axl Multi	Not Classed	Total
03/08/22	0	8	0	0	0	0	0	0	0	0	0	0	0	0	8
01:00	0	6	2	0	0	0	0	0	0	0	0	0	0	0	8
02:00	0	1	0	0	0	0	0	0	0	0	0	0	0	0	1
03:00	0	8	0	0	0	0	0	0	1	0	0	0	0	0	9
04:00	0	3	7	0	1	0	0	0	0	0	0	0	0	0	11
05:00	0	24	6	0	4	1	0	1	0	0	0	0	0	0	36
06:00	0	57	28	0	5	1	0	1	0	0	0	0	0	0	92
07:00	0	120	38	0	9	0	0	2	0	0	0	0	0	0	169
08:00	1	105	25	0	17	0	0	1	0	0	0	0	0	7	156
09:00	1	106	29	1	12	0	0	1	0	0	0	0	0	1	151
10:00	0	81	26	1	25	0	0	0	0	0	0	0	0	3	136
11:00	2	110	33	0	12	0	0	1	0	0	0	0	0	3	161
12 PM	1	103	21	0	9	0	0	0	0	0	0	0	0	5	139
13:00	0	101	27	0	8	0	0	0	0	0	0	0	0	6	142
14:00	1	92	39	0	7	1	0	1	0	0	0	0	0	3	144
15:00	0	107	32	0	7	1	0	0	0	0	0	0	0	8	155
16:00	1	104	32	1	7	0	0	0	0	0	0	0	0	6	151
17:00	0	110	23	0	9	1	0	0	0	0	0	0	0	0	143
18:00	0	59	10	0	3	0	0	0	0	0	0	0	0	0	72
19:00	0	40	8	0	3	0	0	0	1	0	0	0	0	3	55
20:00	0	17	6	0	0	0	0	0	0	0	0	0	0	0	23
21:00	0	15	2	0	1	0	0	0	0	0	0	0	0	0	18
22:00	0	14	1	0	1	0	0	0	0	0	0	0	0	0	16
23:00	0	4	0	0	0	0	0	0	0	1	0	0	0	0	5
Total	7	1395	395	3	140	5	0	8	2	1	0	0	0	45	2001
Percent	0.3%	69.7%	19.7%	0.1%	7.0%	0.2%	0.0%	0.4%	0.1%	0.0%	0.0%	0.0%	0.0%	2.2%	
AM Peak	11:00	07:00	07:00	09:00	10:00	05:00		07:00	03:00					08:00	
Vol.	2	120	38	1	25	1		2	1					7	
PM Peak	12:00	17:00	14:00	16:00	12:00	14:00		14:00	19:00	23:00				15:00	
Vol.	1	110	39	1	9	1		1	1	1				8	

All Traffic Data Services, LLC
alltrafficdata.net

Date Start: 08-Mar-22
Date End: 10-Mar-22
NW Hawthorne Ave W-O NW Hill St

WB

Start Time	Motorcycl	Cars & Trailers	2 Axle Long	Buses	2 Axle 6 Tire	3 Axle Single	4 Axle Single	<5 Axl Double	5 Axle Double	>6 Axl Double	<6 Axl Multi	6 Axle Multi	>6 Axl Multi	Not Classed	Total
03/09/22	0	4	0	0	0	0	0	0	0	0	0	0	0	0	4
01:00	0	4	1	0	0	0	0	0	0	0	0	0	0	0	5
02:00	0	1	0	0	0	0	0	0	0	0	0	0	0	0	1
03:00	0	3	0	0	0	0	0	0	1	0	0	0	0	0	4
04:00	0	1	4	0	2	0	0	0	0	0	0	0	0	0	7
05:00	0	19	11	1	3	0	0	0	0	0	0	0	0	0	34
06:00	0	43	22	0	6	0	0	0	0	0	0	0	0	0	71
07:00	0	110	40	1	7	0	0	5	0	0	0	0	0	1	164
08:00	0	117	32	0	10	0	0	0	0	0	0	0	0	2	161
09:00	1	101	28	1	13	0	0	0	1	0	0	0	0	2	147
10:00	2	80	21	1	11	0	0	1	0	0	0	0	0	5	121
11:00	1	94	34	0	18	0	0	0	0	0	0	0	0	1	148
12 PM	1	97	37	0	7	2	0	0	0	0	0	0	0	3	147
13:00	0	90	19	0	6	1	0	0	0	0	0	0	0	5	121
14:00	4	100	28	1	4	0	0	0	0	0	0	0	0	6	143
15:00	0	116	27	0	14	0	0	0	0	0	0	0	0	2	159
16:00	1	82	33	2	9	0	0	0	0	0	0	0	0	5	132
17:00	0	104	23	1	8	0	0	1	0	0	0	0	0	4	141
18:00	0	81	19	0	7	0	0	0	0	0	0	0	0	3	110
19:00	0	40	8	0	6	0	0	0	0	0	0	0	0	0	54
20:00	0	26	9	0	4	0	0	0	0	0	0	0	0	0	39
21:00	0	14	2	0	1	0	0	0	0	0	0	0	0	0	17
22:00	0	13	1	0	0	0	0	0	0	0	0	0	0	0	14
23:00	0	3	1	0	1	0	0	0	0	0	0	0	0	0	5
Total	10	1343	400	8	137	3	0	7	2	0	0	0	0	39	1949
Percent	0.5%	68.9%	20.5%	0.4%	7.0%	0.2%	0.0%	0.4%	0.1%	0.0%	0.0%	0.0%	0.0%	2.0%	
AM Peak	10:00	08:00	07:00	05:00	11:00			07:00	03:00					10:00	
Vol.	2	117	40	1	18			5	1					5	
PM Peak	14:00	15:00	12:00	16:00	15:00	12:00		17:00						14:00	
Vol.	4	116	37	2	14	2		1						6	

All Traffic Data Services, LLC
alltrafficdata.net

Date Start: 08-Mar-22
Date End: 10-Mar-22
NW Hawthorne Ave W-O NW Hill St

WB

Start Time	Motorcycl	Cars & Trailers	2 Axle Long	Buses	2 Axle 6 Tire	3 Axle Single	4 Axle Single	<5 Axl Double	5 Axle Double	>6 Axl Double	<6 Axl Multi	6 Axle Multi	>6 Axl Multi	Not Classed	Total
03/10/22	0	6	3	0	1	0	0	0	0	0	0	0	0	0	10
01:00	0	4	0	0	0	0	0	0	0	0	0	0	0	0	4
02:00	0	1	0	0	0	0	0	0	0	0	0	0	0	0	1
03:00	0	2	0	0	0	0	0	0	1	0	0	0	0	0	3
04:00	0	3	4	0	1	0	0	0	0	0	0	0	0	0	8
05:00	0	26	8	0	6	0	0	0	0	0	0	0	0	0	40
06:00	1	51	26	0	2	1	0	0	0	0	0	0	0	0	81
07:00	0	95	35	1	11	1	0	3	0	0	0	0	0	1	147
08:00	0	113	43	0	19	0	0	1	0	0	0	0	0	1	177
09:00	2	105	25	0	8	1	0	0	0	0	0	0	0	1	142
10:00	0	99	26	0	15	0	0	0	0	0	0	0	0	0	140
11:00	0	111	36	1	7	1	0	0	0	0	0	0	0	3	159
12 PM	1	94	24	0	9	0	0	0	0	0	0	0	0	4	132
13:00	1	112	17	0	14	0	0	1	0	0	0	0	0	5	150
14:00	0	121	30	0	13	0	0	2	0	0	0	0	0	1	167
15:00	1	85	25	0	15	0	0	1	0	0	0	0	0	7	134
16:00	0	110	20	1	6	0	0	0	0	1	0	0	0	2	140
17:00	0	103	22	0	8	0	0	0	0	0	0	0	0	4	137
18:00	1	74	13	0	3	0	0	0	0	0	0	0	0	4	95
19:00	0	47	15	0	1	0	0	0	0	0	0	0	0	0	63
20:00	0	37	6	0	1	0	0	0	0	0	0	0	0	0	44
21:00	1	24	2	0	2	1	0	0	0	0	0	0	0	0	30
22:00	0	20	2	0	0	0	0	0	0	0	0	0	0	0	22
23:00	0	7	2	0	2	0	0	0	0	0	0	0	0	1	12
Total	8	1450	384	3	144	5	0	8	1	1	0	0	0	34	2038
Percent	0.4%	71.1%	18.8%	0.1%	7.1%	0.2%	0.0%	0.4%	0.0%	0.0%	0.0%	0.0%	0.0%	1.7%	
AM Peak	09:00	08:00	08:00	07:00	08:00	06:00		07:00	03:00					11:00	
Vol.	2	113	43	1	19	1		3	1					3	
PM Peak	12:00	14:00	14:00	16:00	15:00	21:00		14:00		16:00				15:00	
Vol.	1	121	30	1	15	1		2		1				7	
Grand Total	25	4188	1179	14	421	13	0	23	5	2	0	0	0	118	5988
Percent	0.4%	69.9%	19.7%	0.2%	7.0%	0.2%	0.0%	0.4%	0.1%	0.0%	0.0%	0.0%	0.0%	2.0%	

All Traffic Data Services, LLC
alltrafficdata.net

Date Start: 08-Mar-22
Date End: 10-Mar-22
NW Hawthorne Ave W-O NW Hill St

EB

Start Time	1 15	16 20	21 25	26 30	31 35	36 40	41 45	46 50	51 55	56 60	61 65	66 70	71 9999	Total	85th Percent	95th Percent
03/08/22	0	1	2	1	**1**	0	0	0	0	0	0	0	0	5	31	33
01:00	0	0	6	0	0	0	0	0	0	0	0	0	0	6	24	24
02:00	0	0	1	0	0	0	0	0	0	0	0	0	0	1	24	24
03:00	0	0	1	0	0	0	0	0	0	0	0	0	0	1	24	24
04:00	0	1	1	1	0	0	0	0	0	0	0	0	0	3	27	29
05:00	0	0	5	1	0	0	0	0	0	0	0	0	0	6	25	28
06:00	0	3	5	4	0	0	0	0	0	0	0	0	0	12	27	29
07:00	0	2	8	13	0	0	0	0	0	0	0	0	0	23	28	29
08:00	4	10	17	12	0	0	0	0	0	0	0	0	0	43	27	29
09:00	5	18	26	9	0	0	0	0	0	0	0	0	0	58	25	28
10:00	10	15	35	14	1	0	0	0	0	0	0	0	0	75	26	29
11:00	**12**	**21**	**38**	**19**	1	0	0	0	0	0	0	0	0	**91**	26	29
12 PM	**10**	**39**	49	6	0	1	0	0	0	0	0	0	0	105	24	26
13:00	10	28	47	11	1	0	0	0	0	0	0	0	0	97	24	28
14:00	7	36	**57**	10	1	0	0	0	0	0	0	0	0	**111**	24	27
15:00	10	24	57	16	**4**	0	0	0	0	0	0	0	0	111	26	29
16:00	5	28	47	16	0	0	0	0	0	0	0	0	0	96	25	28
17:00	9	25	52	**22**	0	0	0	0	0	0	0	0	0	108	26	28
18:00	3	20	38	16	2	0	0	0	0	0	0	0	0	79	26	29
19:00	2	11	35	16	3	0	0	0	0	0	0	0	0	67	27	29
20:00	0	14	12	15	3	0	0	0	0	0	0	0	0	44	28	31
21:00	0	4	26	19	2	0	**1**	0	0	0	0	0	0	52	28	31
22:00	2	3	10	14	3	**2**	0	0	0	0	0	0	0	34	29	35
23:00	0	0	4	3	1	0	0	0	0	0	0	0	0	8	29	32
Total	89	303	579	238	23	3	1	0	0	0	0	0	0	1236		
Percent	7.2%	24.5%	46.8%	19.3%	1.9%	0.2%	0.1%	0.0%	0.0%	0.0%	0.0%	0.0%	0.0%			
AM Peak	11:00	11:00	11:00	11:00	00:00									11:00		
Vol.	12	21	38	19	1									91		
PM Peak	12:00	12:00	14:00	17:00	15:00	22:00	21:00							14:00		
Vol.	10	39	57	22	4	2	1							111		

All Traffic Data Services, LLC
alltrafficdata.net

Date Start: 08-Mar-22
Date End: 10-Mar-22
NW Hawthorne Ave W-O NW Hill St

EB

Start Time	1 15	16 20	21 25	26 30	31 35	36 40	41 45	46 50	51 55	56 60	61 65	66 70	71 9999	Total	85th Percent	95th Percent
03/09/22	0	1	2	2	0	0	0	0	0	0	0	0	0	5	28	29
01:00	0	0	1	1	0	0	0	0	0	0	0	0	0	2	28	29
02:00	0	0	0	2	0	0	0	0	0	0	0	0	0	2	29	29
03:00	0	0	0	0	0	0	0	0	0	0	0	0	0	0	*	*
04:00	0	0	1	0	0	0	0	0	0	0	0	0	0	1	24	24
05:00	0	0	0	0	0	0	0	0	0	0	0	0	0	0	*	*
06:00	2	4	4	2	0	0	0	0	0	0	0	0	0	12	25	28
07:00	3	14	11	1	0	0	0	0	0	0	0	0	0	29	23	24
08:00	3	20	16	3	0	0	0	0	0	0	0	0	0	42	23	26
09:00	10	20	31	4	0	0	0	0	0	0	0	0	0	65	24	25
10:00	**11**	20	**39**	7	**1**	0	0	0	0	0	0	0	0	**78**	24	27
11:00	5	**25**	28	**10**	0	0	0	0	0	0	0	0	0	68	24	28
12 PM	7	**26**	49	20	0	0	0	0	0	0	0	0	0	102	26	28
13:00	**10**	11	51	17	2	0	0	0	0	0	0	0	0	91	26	29
14:00	9	16	55	18	1	0	0	0	0	0	0	0	0	99	26	28
15:00	5	23	**63**	21	1	0	0	0	0	0	0	0	0	**113**	26	28
16:00	2	12	38	**32**	2	0	0	0	0	0	0	0	0	86	28	29
17:00	3	23	50	22	3	0	0	0	0	0	0	0	0	101	27	29
18:00	2	18	47	20	2	0	0	0	0	0	0	0	0	89	27	29
19:00	0	12	41	20	2	0	0	0	0	0	0	0	0	75	27	29
20:00	1	16	29	16	2	0	0	0	0	0	0	0	0	64	27	29
21:00	0	1	11	20	**4**	0	0	0	0	0	0	0	0	36	29	32
22:00	0	0	6	13	3	0	0	0	0	0	0	0	0	22	29	33
23:00	0	1	4	9	2	0	0	0	0	0	0	0	0	16	29	32
Total	73	263	577	260	25	0	0	0	0	0	0	0	0	1198		
Percent	6.1%	22.0%	48.2%	21.7%	2.1%	0.0%	0.0%	0.0%	0.0%	0.0%	0.0%	0.0%	0.0%			
AM Peak	10:00	11:00	10:00	11:00	10:00									10:00		
Vol.	11	25	39	10	1									78		
PM Peak	13:00	12:00	15:00	16:00	21:00									15:00		
Vol.	10	26	63	32	4									113		

All Traffic Data Services, LLC
alltrafficdata.net

Date Start: 08-Mar-22
Date End: 10-Mar-22
NW Hawthorne Ave W-O NW Hill St

EB

Start Time	1 15	16 20	21 25	26 30	31 35	36 40	41 45	46 50	51 55	56 60	61 65	66 70	71 9999	Total	85th Percent	95th Percent
03/10/22	1	0	5	8	0	0	0	0	0	0	0	0	0	14	28	29
01:00	0	0	1	3	0	0	0	0	0	0	0	0	0	4	29	29
02:00	0	0	1	1	0	0	0	0	0	0	0	0	0	2	28	29
03:00	0	0	1	0	0	0	0	0	0	0	0	0	0	1	24	24
04:00	0	0	1	0	0	0	0	0	0	0	0	0	0	1	24	24
05:00	0	0	3	0	1	0	0	0	0	0	0	0	0	4	32	33
06:00	0	0	1	4	0	0	0	0	0	0	0	0	0	5	29	29
07:00	1	4	14	6	1	0	0	0	0	0	0	0	0	26	27	29
08:00	1	7	28	12	1	0	0	0	0	0	0	0	0	49	27	29
09:00	7	11	36	14	**2**	0	0	0	0	0	0	0	0	70	26	29
10:00	5	**19**	39	10	2	0	0	0	0	0	0	0	0	75	25	29
11:00	**8**	13	**41**	**19**	0	0	0	0	0	0	0	0	0	**81**	26	28
12 PM	5	**33**	44	15	1	**1**	0	0	0	0	0	0	0	99	25	29
13:00	6	25	53	18	0	0	0	0	0	0	0	0	0	102	25	28
14:00	6	23	52	15	0	0	0	0	0	0	0	0	0	96	25	28
15:00	**11**	23	51	15	0	0	0	0	0	0	0	0	0	100	25	28
16:00	9	18	**68**	20	**3**	0	0	0	0	0	0	0	0	**118**	26	29
17:00	8	17	53	**31**	0	1	0	0	0	0	0	0	0	110	27	29
18:00	1	17	51	24	1	0	0	0	0	0	0	0	0	94	27	29
19:00	1	11	36	10	1	0	0	0	0	0	0	0	0	59	26	29
20:00	2	13	35	12	0	0	0	0	0	0	0	0	0	62	26	28
21:00	0	2	37	13	2	0	0	0	0	0	0	0	0	54	27	29
22:00	1	6	11	13	1	0	0	0	0	0	0	0	0	32	28	29
23:00	0	0	11	8	3	0	0	0	0	0	0	0	0	22	29	33
Total	73	242	673	271	19	2	0	0	0	0	0	0	0	1280		
Percent	5.7%	18.9%	52.6%	21.2%	1.5%	0.2%	0.0%	0.0%	0.0%	0.0%	0.0%	0.0%	0.0%			
AM Peak	11:00	10:00	11:00	11:00	09:00									11:00		
Vol.	8	19	41	19	2									81		
PM Peak	15:00	12:00	16:00	17:00	16:00	12:00								16:00		
Vol.	11	33	68	31	3	1								118		
Grand Total	235	808	1829	769	67	5	1	0	0	0	0	0	0	3714		
Percent	6.3%	21.8%	49.2%	20.7%	1.8%	0.1%	0.0%	0.0%	0.0%	0.0%	0.0%	0.0%	0.0%			

15th Percentile :	16 MPH
50th Percentile :	22 MPH
85th Percentile :	26 MPH
95th Percentile :	29 MPH

Stats

10 MPH Pace Speed :	16-25 MPH
Number in Pace :	2637
Percent in Pace :	71.0%
Number of Vehicles > 55 MPH :	0
Percent of Vehicles > 55 MPH :	0.0%
Mean Speed(Average) :	22 MPH

All Traffic Data Services, LLC
alltrafficdata.net

Date Start: 08-Mar-22
Date End: 10-Mar-22
NW Hawthorne Ave W-O NW Hill St

WB

Start Time	1 15	16 20	21 25	26 30	31 35	36 40	41 45	46 50	51 55	56 60	61 65	66 70	71 9999	Total	85th Percent	95th Percent
03/08/22	0	0	7	1	0	0	0	0	0	0	0	0	0	8	24	27
01:00	0	2	5	1	0	0	0	0	0	0	0	0	0	8	24	27
02:00	1	0	0	0	0	0	0	0	0	0	0	0	0	1	12	14
03:00	1	3	5	0	0	0	0	0	0	0	0	0	0	9	23	24
04:00	0	4	6	0	1	0	0	0	0	0	0	0	0	11	24	32
05:00	0	2	21	12	1	0	0	0	0	0	0	0	0	36	28	29
06:00	0	13	53	21	**5**	0	0	0	0	0	0	0	0	92	27	30
07:00	1	34	**104**	**29**	1	0	0	0	0	0	0	0	0	**169**	25	28
08:00	15	36	92	13	0	0	0	0	0	0	0	0	0	156	24	27
09:00	11	65	66	8	1	0	0	0	0	0	0	0	0	151	23	25
10:00	13	29	66	27	1	0	0	0	0	0	0	0	0	136	26	28
11:00	**26**	**67**	60	8	0	0	0	0	0	0	0	0	0	161	23	24
12 PM	14	48	64	**13**	0	0	0	0	0	0	0	0	0	139	24	27
13:00	13	53	68	8	0	0	0	0	0	0	0	0	0	142	24	25
14:00	**24**	58	55	7	0	0	0	0	0	0	0	0	0	144	23	24
15:00	18	58	74	4	**1**	0	0	0	0	0	0	0	0	**155**	23	24
16:00	14	50	**76**	11	0	0	0	0	0	0	0	0	0	151	24	26
17:00	7	**61**	64	11	0	0	0	0	0	0	0	0	0	143	24	26
18:00	0	26	42	4	0	0	0	0	0	0	0	0	0	72	24	25
19:00	4	16	31	3	1	0	0	0	0	0	0	0	0	55	24	27
20:00	1	5	14	3	0	0	0	0	0	0	0	0	0	23	24	28
21:00	0	2	9	6	1	0	0	0	0	0	0	0	0	18	28	30
22:00	1	3	11	1	0	0	0	0	0	0	0	0	0	16	24	26
23:00	0	1	2	2	0	0	0	0	0	0	0	0	0	5	28	29
Total	164	636	995	193	13	0	0	0	0	0	0	0	0	2001		
Percent	8.2%	31.8%	49.7%	9.6%	0.6%	0.0%	0.0%	0.0%	0.0%	0.0%	0.0%	0.0%	0.0%			
AM Peak	11:00	11:00	07:00	07:00	06:00									07:00		
Vol.	26	67	104	29	5									169		
PM Peak	14:00	17:00	16:00	12:00	15:00									15:00		
Vol.	24	61	76	13	1									155		

All Traffic Data Services, LLC
alltrafficdata.net

Date Start: 08-Mar-22
Date End: 10-Mar-22
NW Hawthorne Ave W-O NW Hill St

WB

Start Time	1 15	16 20	21 25	26 30	31 35	36 40	41 45	46 50	51 55	56 60	61 65	66 70	71 9999	Total	85th Percent	95th Percent
03/09/22	0	1	3	0	0	0	0	0	0	0	0	0	0	4	24	24
01:00	0	0	4	1	0	0	0	0	0	0	0	0	0	5	26	28
02:00	0	1	0	0	0	0	0	0	0	0	0	0	0	1	19	19
03:00	0	4	0	0	0	0	0	0	0	0	0	0	0	4	19	19
04:00	0	4	1	2	0	0	0	0	0	0	0	0	0	7	27	29
05:00	0	5	22	5	**2**	0	0	0	0	0	0	0	0	34	26	30
06:00	1	19	43	7	1	0	0	0	0	0	0	0	0	71	24	28
07:00	4	**75**	74	10	1	0	0	0	0	0	0	0	0	**164**	24	26
08:00	11	59	**84**	7	0	0	0	0	0	0	0	0	0	161	23	24
09:00	10	58	67	12	0	0	0	0	0	0	0	0	0	147	24	26
10:00	**12**	48	50	11	0	0	0	0	0	0	0	0	0	121	24	27
11:00	9	62	64	**13**	0	0	0	0	0	0	0	0	0	148	24	27
12 PM	11	45	78	13	0	0	0	0	0	0	0	0	0	147	24	27
13:00	6	38	66	11	0	0	0	0	0	0	0	0	0	121	24	27
14:00	**18**	**55**	58	12	0	0	0	0	0	0	0	0	0	143	24	27
15:00	8	49	**83**	**18**	**1**	0	0	0	0	0	0	0	0	**159**	24	28
16:00	12	45	63	12	0	0	0	0	0	0	0	0	0	132	24	27
17:00	9	41	78	13	0	0	0	0	0	0	0	0	0	141	24	27
18:00	6	40	52	11	1	0	0	0	0	0	0	0	0	110	24	27
19:00	2	17	23	12	0	0	0	0	0	0	0	0	0	54	26	28
20:00	0	14	18	6	1	0	0	0	0	0	0	0	0	39	25	29
21:00	0	3	10	4	0	0	0	0	0	0	0	0	0	17	26	28
22:00	0	5	7	2	0	0	0	0	0	0	0	0	0	14	24	28
23:00	0	0	2	2	1	0	0	0	0	0	0	0	0	5	31	33
Total	119	688	950	184	8	0	0	0	0	0	0	0	0	1949		
Percent	6.1%	35.3%	48.7%	9.4%	0.4%	0.0%	0.0%	0.0%	0.0%	0.0%	0.0%	0.0%	0.0%			
AM Peak	10:00	07:00	08:00	11:00	05:00									07:00		
Vol.	12	75	84	13	2									164		
PM Peak	14:00	14:00	15:00	15:00	15:00									15:00		
Vol.	18	55	83	18	1									159		

All Traffic Data Services, LLC
alltrafficdata.net

Date Start: 08-Mar-22
Date End: 10-Mar-22
NW Hawthorne Ave W-O NW Hill St

WB

Start Time	1 15	16 20	21 25	26 30	31 35	36 40	41 45	46 50	51 55	56 60	61 65	66 70	71 9999	Total	85th Percent	95th Percent
03/10/22	0	2	5	3	0	0	0	0	0	0	0	0	0	10	27	29
01:00	0	0	2	2	0	0	0	0	0	0	0	0	0	4	28	29
02:00	0	0	1	0	0	0	0	0	0	0	0	0	0	1	24	24
03:00	0	0	2	1	0	0	0	0	0	0	0	0	0	3	27	29
04:00	0	2	3	3	0	0	0	0	0	0	0	0	0	8	28	29
05:00	0	1	13	22	3	**1**	0	0	0	0	0	0	0	40	29	33
06:00	0	6	32	33	**9**	1	0	0	0	0	0	0	0	81	29	33
07:00	2	25	68	**48**	4	0	0	0	0	0	0	0	0	147	28	29
08:00	3	36	**103**	34	1	0	0	0	0	0	0	0	0	**177**	26	28
09:00	8	40	74	20	0	0	0	0	0	0	0	0	0	142	24	28
10:00	5	31	79	24	1	0	0	0	0	0	0	0	0	140	25	28
11:00	**19**	**52**	72	13	2	1	0	0	0	0	0	0	0	159	24	28
12 PM	12	41	66	12	1	0	0	0	0	0	0	0	0	132	24	27
13:00	**16**	47	**83**	4	0	0	0	0	0	0	0	0	0	150	23	24
14:00	11	**55**	79	**21**	1	0	0	0	0	0	0	0	0	**167**	24	28
15:00	13	38	68	15	0	0	0	0	0	0	0	0	0	134	24	27
16:00	10	45	79	6	0	0	0	0	0	0	0	0	0	140	24	24
17:00	10	38	74	13	**2**	0	0	0	0	0	0	0	0	137	24	28
18:00	9	24	54	8	0	0	0	0	0	0	0	0	0	95	24	27
19:00	2	26	35	0	0	0	0	0	0	0	0	0	0	63	23	24
20:00	1	14	25	4	0	0	0	0	0	0	0	0	0	44	24	27
21:00	3	10	15	1	1	0	0	0	0	0	0	0	0	30	24	27
22:00	1	8	13	0	0	0	0	0	0	0	0	0	0	22	23	24
23:00	1	3	5	3	0	0	0	0	0	0	0	0	0	12	27	29
Total	126	544	1050	290	25	3	0	0	0	0	0	0	0	2038		
Percent	6.2%	26.7%	51.5%	14.2%	1.2%	0.1%	0.0%	0.0%	0.0%	0.0%	0.0%	0.0%	0.0%			
AM Peak	11:00	11:00	08:00	07:00	06:00	05:00								08:00		
Vol.	19	52	103	48	9	1								177		
PM Peak	13:00	14:00	13:00	14:00	17:00									14:00		
Vol.	16	55	83	21	2									167		
Grand Total	409	1868	2995	667	46	3	0	0	0	0	0	0	0	5988		
Percent	6.8%	31.2%	50.0%	11.1%	0.8%	0.1%	0.0%	0.0%	0.0%	0.0%	0.0%	0.0%	0.0%			

15th Percentile :	16 MPH
50th Percentile :	21 MPH
85th Percentile :	24 MPH
95th Percentile :	28 MPH

Stats

10 MPH Pace Speed :	16-25 MPH
Number in Pace :	4863
Percent in Pace :	81.2%
Number of Vehicles > 55 MPH :	0
Percent of Vehicles > 55 MPH :	0.0%
Mean Speed(Average) :	21 MPH

APPENDIX B: PRELIMINARY HAWTHORNE AVENUE BRIDGE CONCEPTS

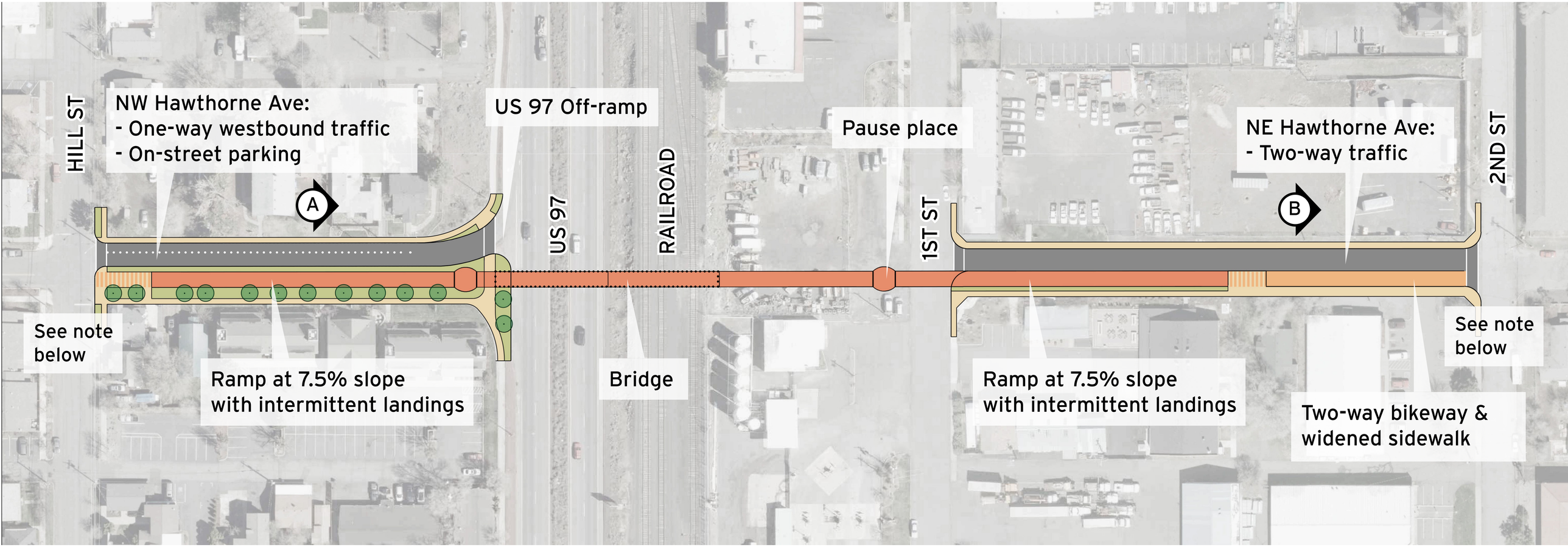

Hawthorne Ave: Concept 1

Straight Bridge & Approach Ramps

Note: Additional study outside of this project area will be completed to address connectivity with the remainder of the corridor.

2020 Transportation GO Bond

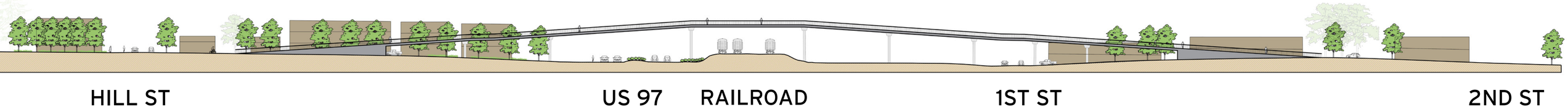

Hawthorne Ave: Concept 1 - Profile

Straight Bridge & Approach Ramps

2020 Transportation GO Bond

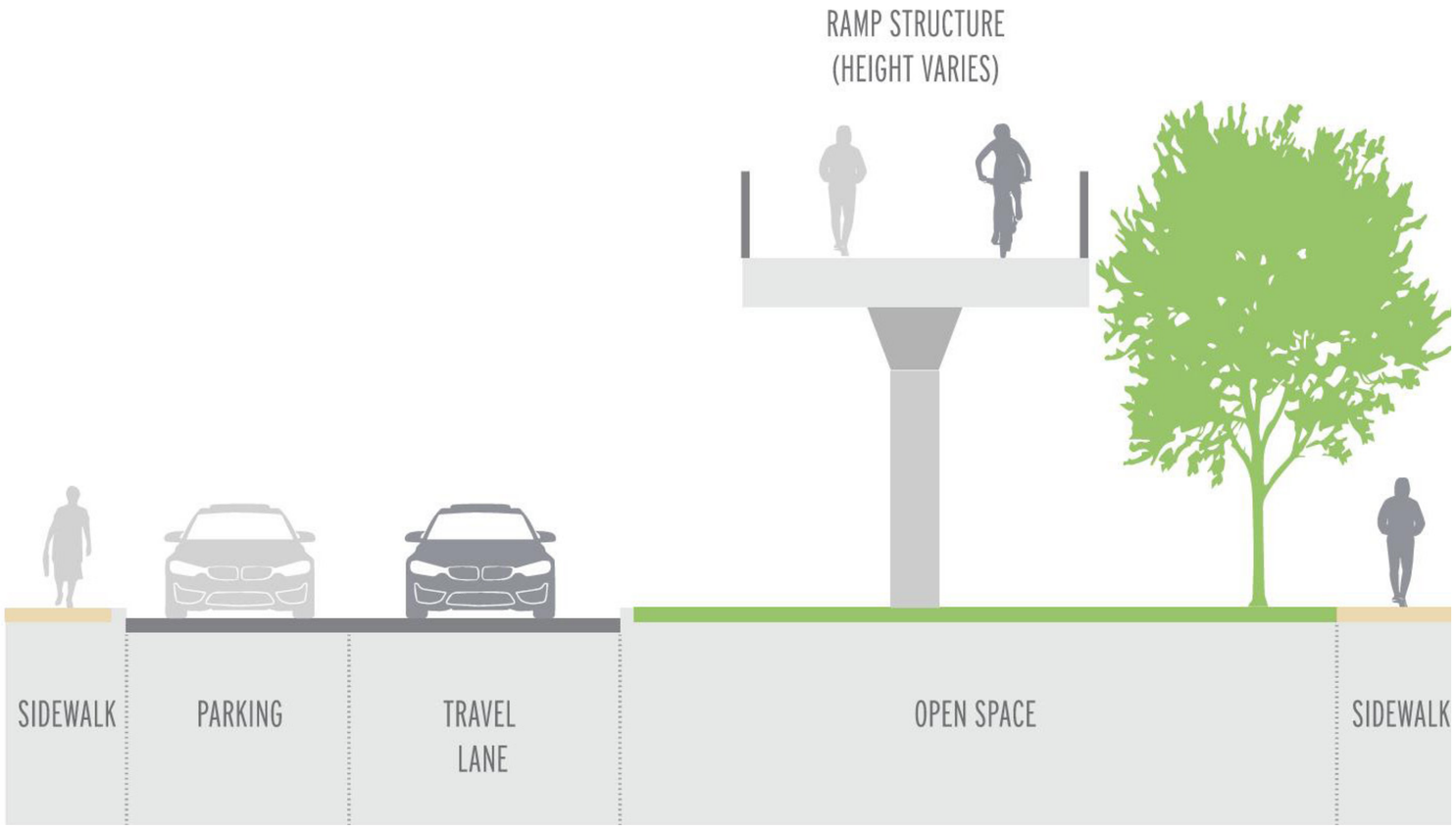

Hawthorne Ave: Concepts 1 and 2

Cross section A

2020 Transportation GO Bond

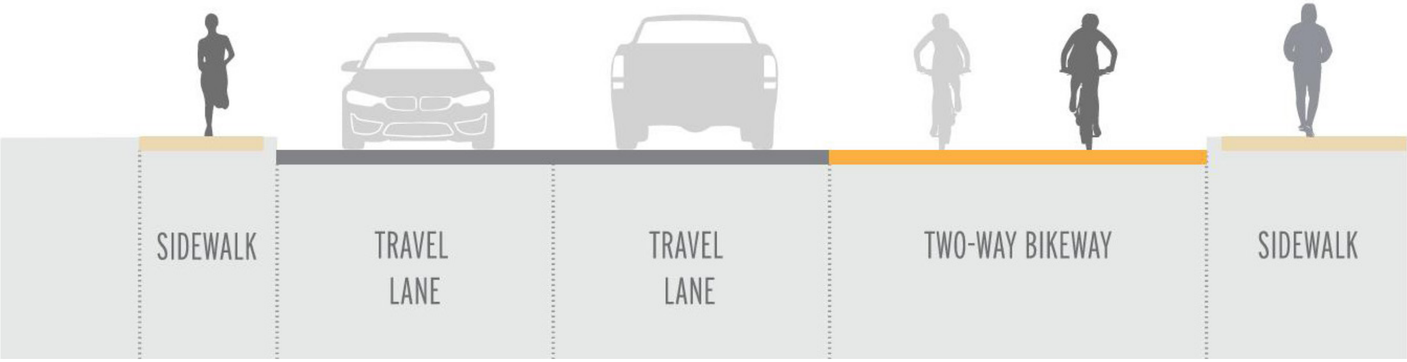

Hawthorne Ave: All concepts

Cross section B

2020 Transportation GO Bond

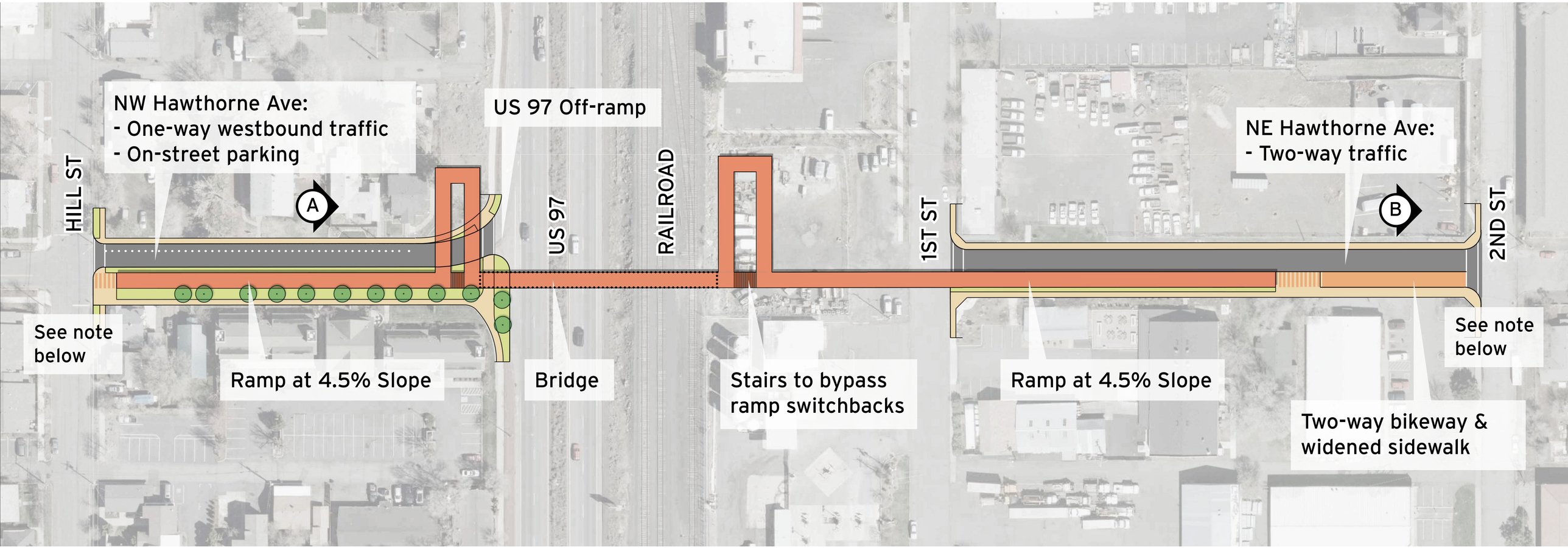

Hawthorne Ave: Concept 2

Switchback Ramps / Maintain 4.5% Slope

Note: Additional study outside of this project area will be completed to address connectivity with the remainder of the corridor.

2020 Transportation GO Bond

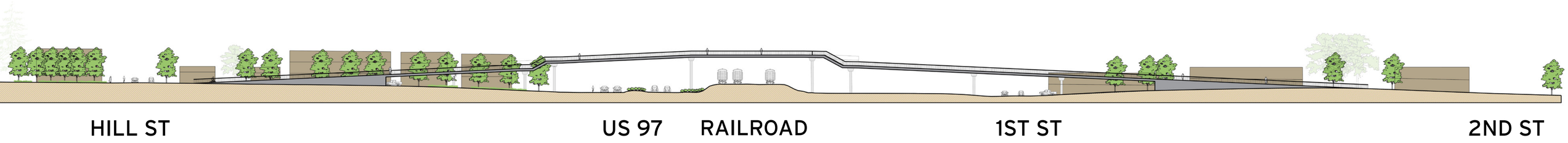

Hawthorne Ave: Concept 2 - Profile

Switchback Ramps / Maintain 4.5% Slope

2020 Transportation GO Bond

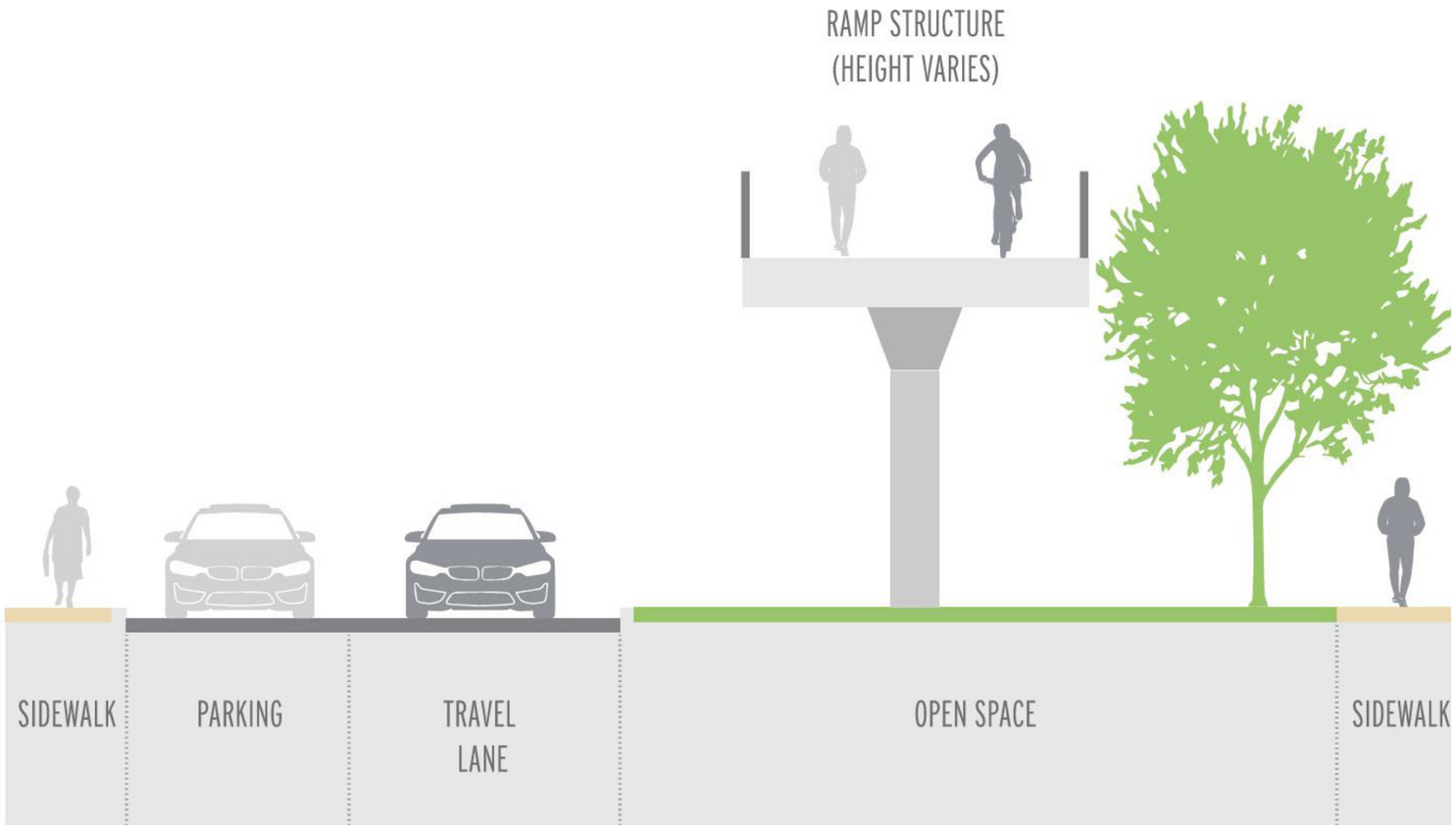

Hawthorne Ave: Concepts 1 and 2

Cross section A

2020 Transportation GO Bond

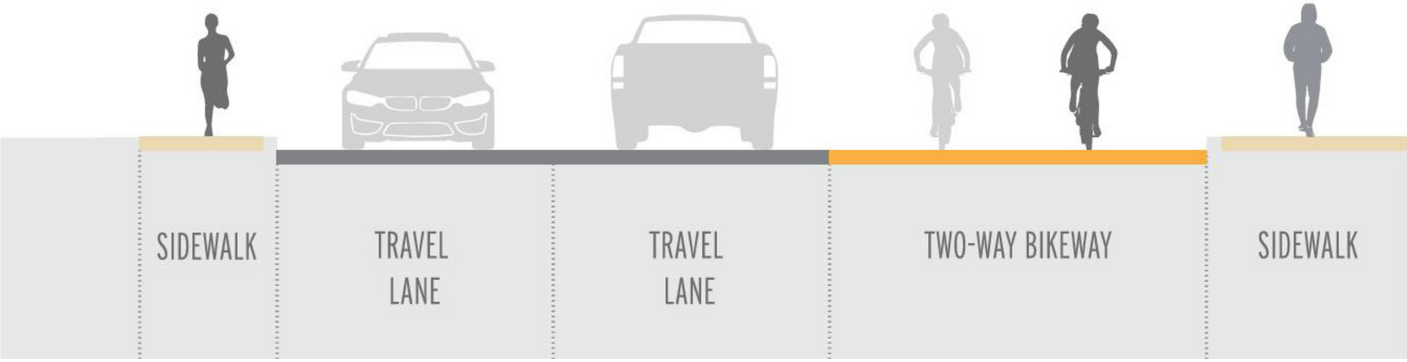

Hawthorne Ave: All concepts

Cross section B

2020 Transportation GO Bond

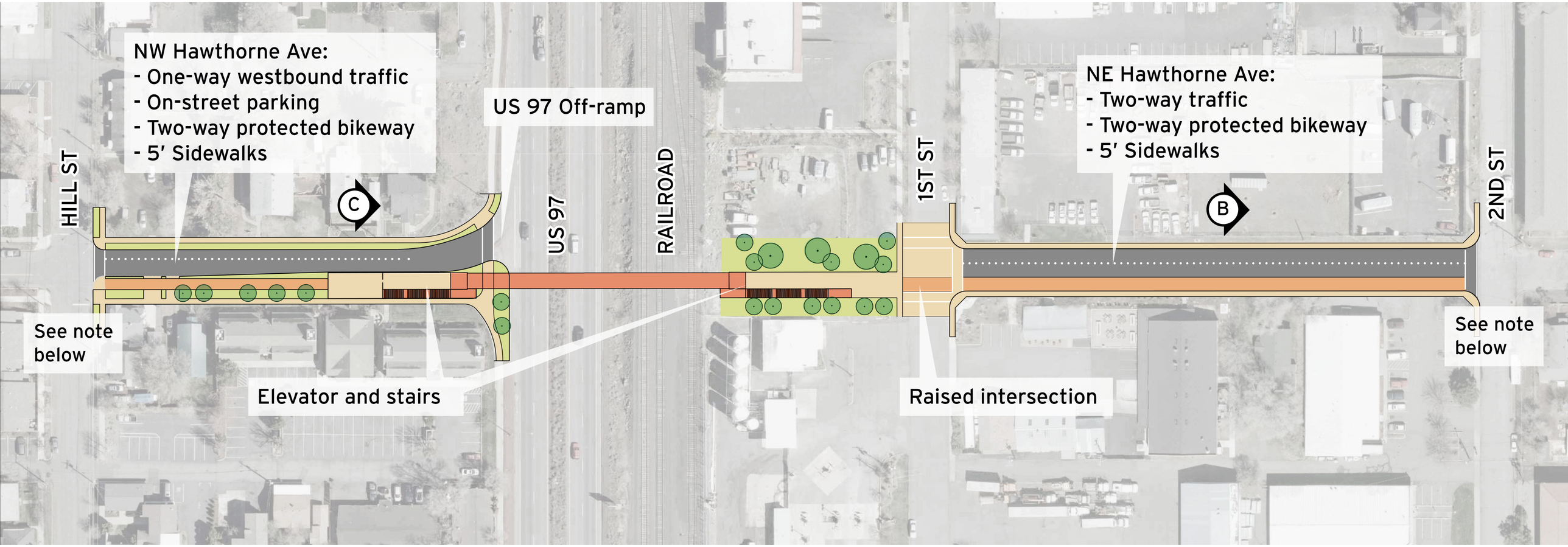

Hawthorne Ave: Concept 3

Stair and Elevator Bridge Access / No Ramps

Note: Additional study outside of this project area will be completed to address connectivity with the remainder of the corridor.

2020 Transportation GO Bond

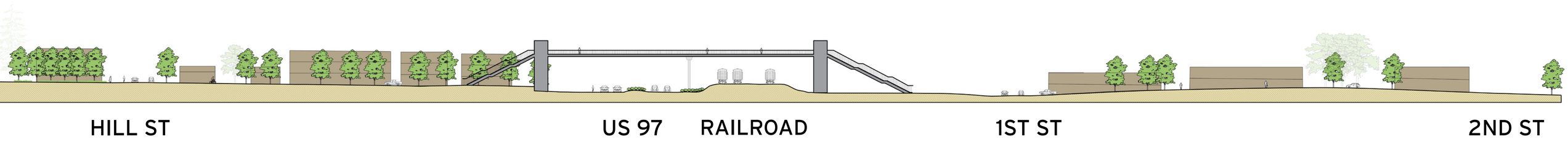

Hawthorne Ave: Concept 3 - Profile

Stair and Elevator Bridge Access / No Ramps

2020 Transportation GO Bond

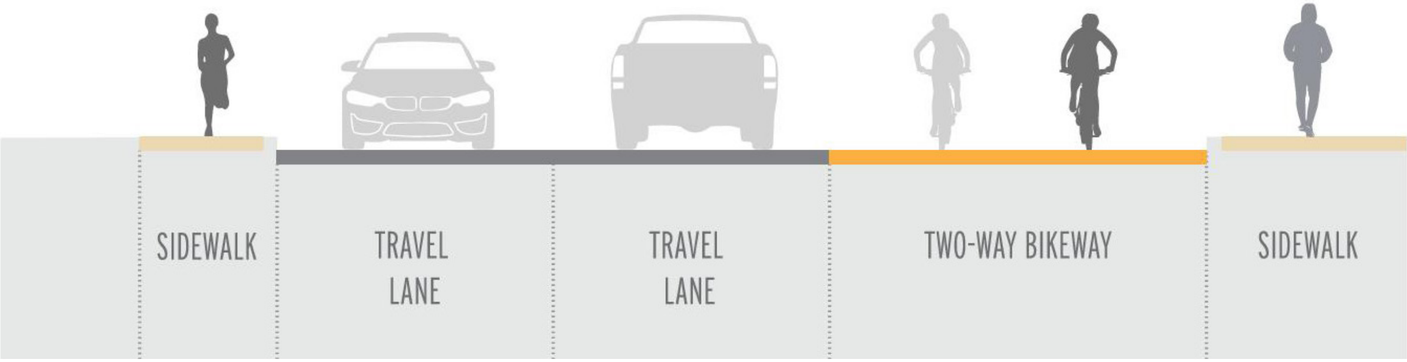

Hawthorne Ave: All concepts

Cross section B

2020 Transportation GO Bond

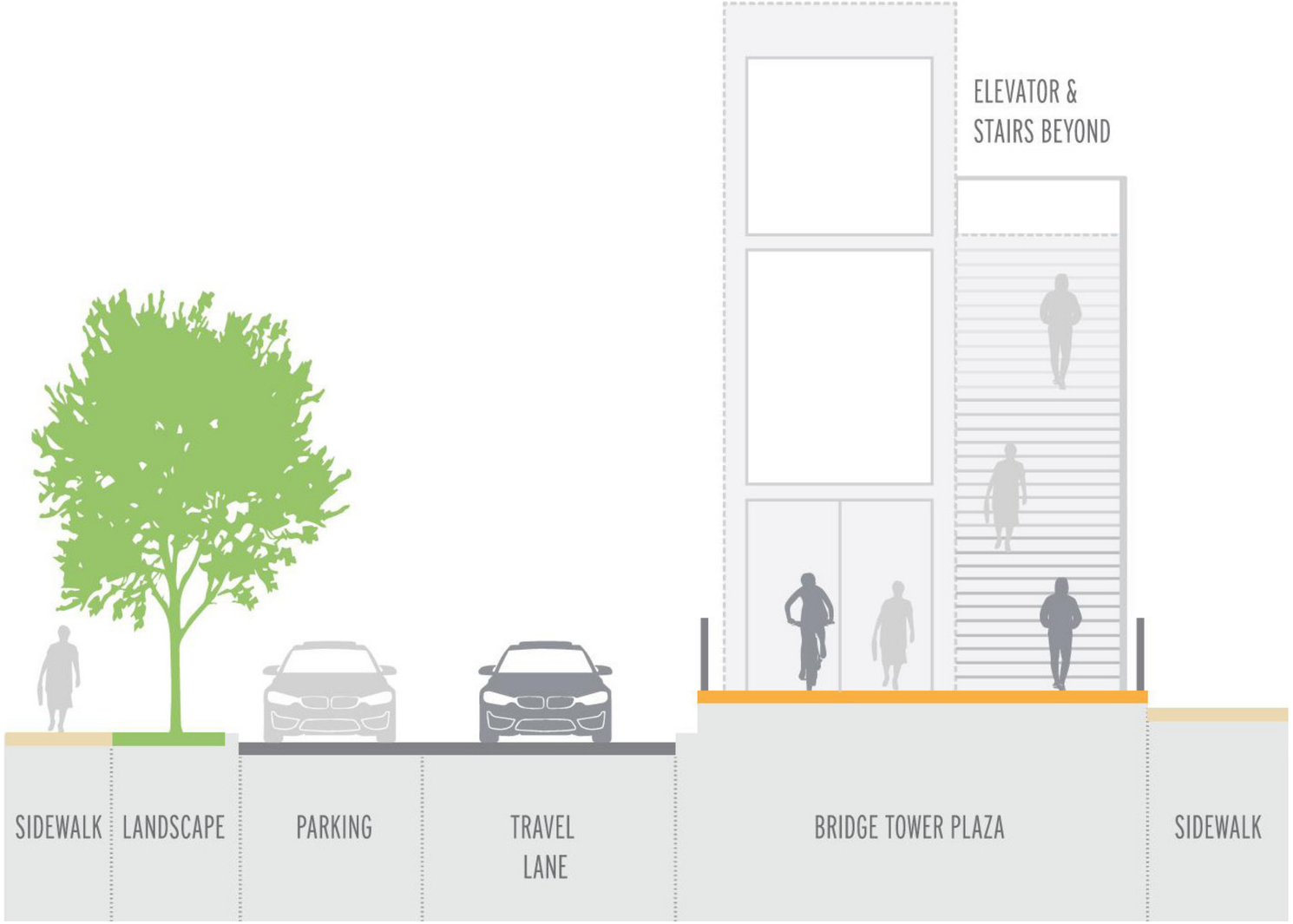

Hawthorne Ave: Concept 3

Cross section C

2020 Transportation GO Bond

APPENDIX C: CRASH DATA

000 Crash Id	015 Street Name	016 Intersecting Street Name	028 Crash Type	029 Collision Type	031 Weather Conditions	032 Road Surface Conditions	033 Lighting Conditions	034 Traffic Control	036 Crash Cause 1	114 Roadway Departure Flag	117 Severity	118 Intersection Flag	126 Bike / Ped Related	Day of 001 Date	013 Lat	014 Long
1764097	BEND PKY	NW HAWTHORNE AVE	FIX OBJ	FIX	CLR	DRY	DAY	UNKNOWN	ILLNESS	No	PDO	Yes	Neither	29-Jul-17	44.05809	-121.30714
1789063	BEND PKY	NW HAWTHORNE AVE	S-1STOP	REAR	CLR	DRY	DAY	STOP SIGN	F AVOID	No	Minor Injury (B)	Yes	Neither	12-Jun-18	44.05795	-121.30714
1631554	BEND PKY	NW HAWTHORNE AVE	S-1STOP	REAR	CLR	DRY	DUSK	STOP SIGN	F AVOID	No	PDO	Yes	Neither	11-Feb-15	44.05795	-121.30714
1860457	HAWTHORNE AVE	HILL ST	ANGL-OTH	ANGL	CLR	DRY	DAY	STOP SIGN	NO-YIELD	No	PDO	Yes	Neither	1-Sep-19	44.05795	-121.30877
1702650	BEND PKY	NW HAWTHORNE AVE	S-1STOP	REAR	CLR	DRY	DAY	STOP SIGN	F AVOID	No	PDO	Yes	Neither	20-Jul-16	44.05795	-121.30714
1859234	HARRIMAN ST	HAWTHORNE AVE	ANGL-OTH	ANGL	CLR	DRY	DAY	STOP SIGN	NO-YIELD	No	PDO	Yes	Neither	8-Jul-19	44.05794	-121.31034
1824688	HARRIMAN ST	HAWTHORNE AVE	ANGL-OTH	ANGL	CLR	DRY	DAY	STOP SIGN	NO-YIELD	No	PDO	Yes	Neither	27-Apr-18	44.05794	-121.31034
1703900	BEND PKY	NW HAWTHORNE AVE	S-1STOP	REAR	CLR	DRY	DAY	STOP SIGN	F AVOID	No	PDO	Yes	Neither	22-Aug-16	44.05795	-121.30714
1822511	HARRIMAN ST	HAWTHORNE AVE	ANGL-OTH	ANGL	CLR	DRY	DLIT	STOP SIGN	NO-YIELD	No	PDO	Yes	Neither	21-Dec-18	44.05794	-121.31033
1704850	BEND PKY	NW HAWTHORNE AVE	S-1STOP	REAR	CLR	DRY	DAY	STOP SIGN	F AVOID	No	PDO	Yes	Neither	18-Sep-16	44.05795	-121.30714
1705328	BEND PKY	NW HAWTHORNE AVE	S-1STOP	REAR	CLR	DRY	DAY	UNKNOWN	TOO-CLOS	No	PDO	Yes	Neither	30-Sep-16	44.05809	-121.30714
1712432	BEND PKY	NW HAWTHORNE AVE	S-1STOP	REAR	CLD	WET	DAY	STOP SIGN	F AVOID	No	PDO	Yes	Neither	14-Nov-16	44.05795	-121.30714
1758196	BEND PKY	NW HAWTHORNE AVE	S-1STOP	REAR	CLR	DRY	DAY	STOP SIGN	TOO-CLOS	No	PDO	Yes	Neither	27-May-17	44.05795	-121.30714
1763645	BEND PKY	NW HAWTHORNE AVE	S-1STOP	REAR	CLR	DRY	DAY	STOP SIGN	F AVOID	No	PDO	Yes	Neither	13-Jul-17	44.05795	-121.30714
1765215	BEND PKY	NW HAWTHORNE AVE	S-1STOP	REAR	CLR	DRY	DAY	STOP SIGN	F AVOID	No	PDO	Yes	Neither	22-Aug-17	44.05795	-121.30714
1816596	BEND PKY	NW HAWTHORNE AVE	S-OTHER	REAR	FOG	WET	DAY	STOP SIGN	INATTENT	No	PDO	Yes	Neither	14-Jan-18	44.05795	-121.30714
1822775	NW HAWTHORNE A\	BEND PKY	S-1STOP	REAR	CLR	DRY	DAY	STOP SIGN	TOO-CLOS	No	PDO	Yes	Neither	14-Feb-18	44.05795	-121.30742
1818427	BEND PKY	NW HAWTHORNE AVE	S-OTHER	REAR	CLD	DRY	DAY	STOP SIGN	CARELESS	No	PDO	Yes	Neither	5-Apr-18	44.05795	-121.30714
1815215	BEND PKY	NW HAWTHORNE AVE	S-OTHER	REAR	CLR	DRY	DAY	STOP SIGN	F AVOID	No	PDO	Yes	Neither	25-Jul-18	44.05795	-121.30714
1815636	BEND PKY	NW HAWTHORNE AVE	S-OTHER	REAR	CLR	DRY	DAY	STOP SIGN	F AVOID	No	PDO	Yes	Neither	19-Sep-18	44.05795	-121.30714
1713747	HAWTHORNE AVE	HILL ST	ANGL-OTH	TURN	CLR	DRY	DAY	STOP SIGN	NO-YIELD	No	PDO	Yes	Neither	6-Dec-16	44.05794	-121.30877
1816522	BEND PKY	NW HAWTHORNE AVE	S-OTHER	REAR	CLR	SNO	DAY	STOP SIGN	TOO-CLOS	No	PDO	Yes	Neither	27-Dec-18	44.05795	-121.30713
1710839	HAWTHORNE AVE	HILL ST	ANGL-OTH	ANGL	CLD	WET	DAY	STOP SIGN	NO-YIELD	No	PDO	Yes	Neither	14-Oct-16	44.05794	-121.30877
1860045	BEND PKY	NW HAWTHORNE AVE	S-1STOP	REAR	CLR	DRY	DAY	STOP SIGN	TOO-CLOS	No	PDO	Yes	Neither	8-Aug-19	44.05795	-121.3074
1861125	NW HAWTHORNE A\	BEND PKY	S-1STOP	REAR	CLR	DRY	DAY	STOP SIGN	CARELESS	No	PDO	Yes	Neither	24-Sep-19	44.05795	-121.3074
1862432	NW HAWTHORNE A\	BEND PKY	S-1STOP	REAR	CLR	DRY	DAY	STOP SIGN	F AVOID	No	PDO	Yes	Neither	11-Nov-19	44.05795	-121.30741
1863191	NW HAWTHORNE A\	BEND PKY	S-1STOP	REAR	UNK	ICE	DUSK	STOP SIGN	TOO-FAST	No	PDO	Yes	Neither	1-Dec-19	44.05796	-121.30744
1612538	BEND PKY	NW HAWTHORNE AVE	S-1STOP	REAR	CLD	DRY	DAY	STOP SIGN	F AVOID	No	Possible Injury (	Yes	Neither	25-Mar-15	44.05795	-121.30714
1612791	BEND PKY	NW HAWTHORNE AVE	S-1STOP	REAR	CLR	DRY	DAY	STOP SIGN	F AVOID	No	Possible Injury (	Yes	Neither	30-Mar-15	44.05795	-121.30714
1616523	BEND PKY	NW HAWTHORNE AVE	S-1STOP	REAR	CLR	DRY	DAY	STOP SIGN	F AVOID	No	Possible Injury (	Yes	Neither	7-May-15	44.05795	-121.30714
1616878	BEND PKY	NW HAWTHORNE AVE	S-1STOP	REAR	CLR	DRY	DAY	STOP SIGN	F AVOID	No	Possible Injury (	Yes	Neither	19-May-15	44.05795	-121.30714
1616889	BEND PKY	NW HAWTHORNE AVE	S-1STOP	REAR	RAIN	WET	DAY	STOP SIGN	F AVOID	No	Possible Injury (	Yes	Neither	21-May-15	44.05795	-121.30714
1624702	BEND PKY	NW HAWTHORNE AVE	S-1STOP	REAR	CLR	DRY	DAY	STOP SIGN	F AVOID	No	Possible Injury (	Yes	Neither	25-Sep-15	44.05795	-121.30714
1624989	BEND PKY	NW HAWTHORNE AVE	S-1STOP	REAR	CLR	DRY	DAY	STOP SIGN	F AVOID	No	Possible Injury (	Yes	Neither	1-Oct-15	44.05795	-121.30714
1666369	BEND PKY	NW HAWTHORNE AVE	S-1STOP	REAR	CLD	UNK	DAY	STOP SIGN	CARELESS	No	Possible Injury (	Yes	Neither	20-May-16	44.05795	-121.30714
1671499	BEND PKY	NW HAWTHORNE AVE	S-1STOP	REAR	CLD	DRY	DAY	STOP SIGN	CARELESS	No	Possible Injury (	Yes	Neither	8-Jul-16	44.05795	-121.30714
1683142	BEND PKY	NW HAWTHORNE AVE	S-1STOP	REAR	CLR	DRY	DAY	STOP SIGN	F AVOID	No	Possible Injury (	Yes	Neither	23-Sep-16	44.05795	-121.30714
1725364	BEND PKY	NW HAWTHORNE AVE	S-1STOP	REAR	CLR	DRY	DAY	STOP SIGN	F AVOID	No	Possible Injury (	Yes	Neither	18-Apr-17	44.05795	-121.30714
1783877	BEND PKY	NW HAWTHORNE AVE	S-1STOP	REAR	CLR	DRY	DAY	STOP SIGN	TOO-CLOS	No	Possible Injury (	Yes	Neither	6-Apr-18	44.05795	-121.30714
1799369	BEND PKY	NW HAWTHORNE AVE	S-1STOP	REAR	CLR	DRY	DARK	STOP SIGN	F AVOID	No	Possible Injury (	Yes	Neither	14-Nov-18	44.05795	-121.30714
1800287	BEND PKY	NW HAWTHORNE AVE	S-STRGHT	REAR	RAIN	WET	DAY	STOP SIGN	F AVOID	No	Possible Injury (	Yes	Neither	14-Dec-18	44.05795	-121.30714
1833651	BEND PKY	NW HAWTHORNE AVE	S-1STOP	REAR	CLR	DRY	DAY	STOP SIGN	TOO-CLOS	No	Possible Injury (	Yes	Neither	25-Apr-19	44.05795	-121.3074
1623661	HAWTHORNE AVE	HILL ST	ANGL-OTH	TURN	CLR	DRY	DARK	STOP SIGN	NO-YIELD	No	Possible Injury (	Yes	Neither	11-Sep-15	44.05794	-121.30877
1835722	BEND PKY	NW HAWTHORNE AVE	S-STRGHT	REAR	CLR	DRY	DAY	STOP SIGN	TOO-CLOS	No	Possible Injury (	Yes	Neither	1-Aug-19	44.05795	-121.3074
1837574	BEND PKY	NW HAWTHORNE AVE	S-1STOP	REAR	CLR	DRY	DAY	STOP SIGN	TOO-CLOS	No	Possible Injury (	Yes	Neither	19-Sep-19	44.05795	-121.30739
1838568	BEND PKY	NW HAWTHORNE AVE	S-1STOP	REAR	CLR	DRY	DAY	STOP SIGN	F AVOID	No	Possible Injury (	Yes	Neither	5-Nov-19	44.05796	-121.3074
1718405	BEND PKY	NW HAWTHORNE AVE	S-STRGHT	SS-O	SNOW	SNO	DLIT	NONE	IMP-OVER	No	Minor Injury (B)	Yes	Neither	11-Jan-17	44.05809	-121.30714
1657811	BEND PKY	NW HAWTHORNE AVE	ANGL-OTH	TURN	CLR	DRY	DAY	STOP SIGN	SPEED	No	Minor Injury (B)	Yes	Neither	4-Jul-16	44.05795	-121.30714
1767096	BEND PKY	NW HAWTHORNE AVE	S-OTHER	TURN	CLR	DRY	DAY	STOP SIGN	IMP-OVER	No	PDO	Yes	Neither	28-Sep-17	44.05795	-121.30714
1816182	BEND PKY	NW HAWTHORNE AVE	S-OTHER	TURN	CLR	DRY	DAY	STOP SIGN	IMP-TURN	No	PDO	Yes	Neither	1-Dec-18	44.05795	-121.30714
1657971	BEND PKY	NW HAWTHORNE AVE	S-OTHER	TURN	CLR	DRY	DAY	STOP SIGN	F AVOID	No	Possible Injury (	Yes	Neither	6-Aug-16	44.05795	-121.30714
1863571	HARRIMAN ST	FRANKLIN AVE	ANGL-OTH	ANGL	CLD	DRY	DAY	UNKNOWN	NO-YIELD	No	PDO	Yes	Neither	23-Dec-19	44.05625	-121.30985
1765278	HARRIMAN ST	FRANKLIN AVE	ANGL-OTH	TURN	SMOK	DRY	DAY	UNKNOWN	CARELESS	No	PDO	Yes	Neither	26-Aug-17	44.05613	-121.30979
1641396	FRANKLIN AVE	HARRIMAN ST	O-1 L-TURN	TURN	CLR	DRY	DAY	STOP SIGN	NO-YIELD	No	PDO	Yes	Neither	26-Sep-15	44.05594	-121.30971
1836652	FRANKLIN AVE	HARRIMAN ST	ANGL-OTH	TURN	CLR	DRY	DAY	STOP SIGN	NO-YIELD	No	Possible Injury (	Yes	Neither	29-Aug-19	44.05594	-121.30972
1726254	FRANKLIN AVE	HARRIMAN ST	S-1STOP	REAR	CLR	DRY	DAY	STOP SIGN	F AVOID	No	Possible Injury (	Yes	Neither	9-May-17	44.05594	-121.30971

APPENDIX D: NO BUILD/BUILD HCM REPORTS/QUEUING REPORTS

Intersection	
Int Delay, s/veh	5.1

Movement	EBL	EBT	EBR	WBL	WBT	WBR	NBL	NBT	NBR	SBL	SBT	SBR
Lane Configurations												
Traffic Vol, veh/h	70	100	35	60	115	10	25	25	20	5	10	35
Future Vol, veh/h	70	100	35	60	115	10	25	25	20	5	10	35
Conflicting Peds, #/hr	0	0	15	15	0	0	3	0	3	3	0	3
Sign Control	Free	Free	Free	Free	Free	Free	Stop	Stop	Stop	Stop	Stop	Stop
RT Channelized	-	-	None	-	-	None	-	-	None	-	-	None
Storage Length	-	-	-	-	-	-	-	-	-	-	-	-
Veh in Median Storage, #	-	0	-	-	0	-	-	0	-	-	0	-
Grade, %	-	0	-	-	0	-	-	0	-	-	0	-
Peak Hour Factor	90	90	90	90	90	90	90	90	90	90	90	90
Heavy Vehicles, %	2	0	0	0	1	0	4	0	0	0	0	0
Mvmt Flow	78	111	39	67	128	11	28	28	22	6	11	39

Major/Minor	Major1			Major2			Minor1			Minor2		
Conflicting Flow All	139	0	0	165	0	0	598	575	149	583	589	137
Stage 1	-	-	-	-	-	-	302	302	-	268	268	-
Stage 2	-	-	-	-	-	-	296	273	-	315	321	-
Critical Hdwy	4.12	-	-	4.1	-	-	7.14	6.5	6.2	7.1	6.5	6.2
Critical Hdwy Stg 1	-	-	-	-	-	-	6.14	5.5	-	6.1	5.5	-
Critical Hdwy Stg 2	-	-	-	-	-	-	6.14	5.5	-	6.1	5.5	-
Follow-up Hdwy	2.218	-	-	2.2	-	-	3.536	4	3.3	3.5	4	3.3
Pot Cap-1 Maneuver	1445	-	-	1426	-	-	411	431	903	427	423	917
Stage 1	-	-	-	-	-	-	703	668	-	742	691	-
Stage 2	-	-	-	-	-	-	708	688	-	700	655	-
Platoon blocked, %		-	-		-	-						
Mov Cap-1 Maneuver	1445	-	-	1406	-	-	347	379	888	360	372	914
Mov Cap-2 Maneuver	-	-	-	-	-	-	347	379	-	360	372	-
Stage 1	-	-	-	-	-	-	652	620	-	698	655	-
Stage 2	-	-	-	-	-	-	630	652	-	612	608	-

Approach	EB	WB	NB	SB
HCM Control Delay, s	2.6	2.5	15	11.2
HCM LOS			C	B

Minor Lane/Major Mvmt	NBLn1	EBL	EBT	EBR	WBL	WBT	WBR	SBLn1
Capacity (veh/h)	436	1445	-	-	1406	-	-	632
HCM Lane V/C Ratio	0.178	0.054	-	-	0.047	-	-	0.088
HCM Control Delay (s)	15	7.6	0	-	7.7	0	-	11.2
HCM Lane LOS	C	A	A	-	A	A	-	B
HCM 95th %tile Q(veh)	0.6	0.2	-	-	0.1	-	-	0.3

Intersection	
Int Delay, s/veh	6.1

Movement	EBL	EBT	EBR	WBL	WBT	WBR	NBL	NBT	NBR	SBL	SBT	SBR
Lane Configurations												
Traffic Vol, veh/h	25	95	5	40	140	105	10	35	45	80	25	35
Future Vol, veh/h	25	95	5	40	140	105	10	35	45	80	25	35
Conflicting Peds, #/hr	0	0	2	2	0	0	7	0	5	5	0	7
Sign Control	Free	Free	Free	Free	Free	Free	Stop	Stop	Stop	Stop	Stop	Stop
RT Channelized	-	-	None	-	-	None	-	-	None	-	-	None
Storage Length	-	-	-	-	-	-	-	-	-	-	-	-
Veh in Median Storage, #	-	0	-	-	0	-	-	0	-	-	0	-
Grade, %	-	0	-	-	0	-	-	0	-	-	0	-
Peak Hour Factor	91	91	91	91	91	91	91	91	91	91	91	91
Heavy Vehicles, %	0	0	0	0	1	4	0	0	0	2	0	0
Mvmt Flow	27	104	5	44	154	115	11	38	49	88	27	38

Major/Minor	Major1			Major2			Minor1			Minor2		
Conflicting Flow All	269	0	0	111	0	0	502	520	114	509	465	219
Stage 1	-	-	-	-	-	-	163	163	-	300	300	-
Stage 2	-	-	-	-	-	-	339	357	-	209	165	-
Critical Hdwy	4.1	-	-	4.1	-	-	7.1	6.5	6.2	7.12	6.5	6.2
Critical Hdwy Stg 1	-	-	-	-	-	-	6.1	5.5	-	6.12	5.5	-
Critical Hdwy Stg 2	-	-	-	-	-	-	6.1	5.5	-	6.12	5.5	-
Follow-up Hdwy	2.2	-	-	2.2	-	-	3.5	4	3.3	3.518	4	3.3
Pot Cap-1 Maneuver	1306	-	-	1492	-	-	483	463	944	475	498	826
Stage 1	-	-	-	-	-	-	844	767	-	709	669	-
Stage 2	-	-	-	-	-	-	680	632	-	793	766	-
Platoon blocked, %		-	-		-	-						
Mov Cap-1 Maneuver	1306	-	-	1489	-	-	417	436	938	400	469	820
Mov Cap-2 Maneuver	-	-	-	-	-	-	417	436	-	400	469	-
Stage 1	-	-	-	-	-	-	824	749	-	693	646	-
Stage 2	-	-	-	-	-	-	595	610	-	694	748	-

Approach	EB	WB	NB	SB
HCM Control Delay, s	1.6	1.1	12.3	16.2
HCM LOS			B	C

Minor Lane/Major Mvmt	NBLn1	EBL	EBT	EBR	WBL	WBT	WBR	SBLn1
Capacity (veh/h)	591	1306	-	-	1489	-	-	473
HCM Lane V/C Ratio	0.167	0.021	-	-	0.03	-	-	0.325
HCM Control Delay (s)	12.3	7.8	0	-	7.5	0	-	16.2
HCM Lane LOS	B	A	A	-	A	A	-	C
HCM 95th %tile Q(veh)	0.6	0.1	-	-	0.1	-	-	1.4

Intersection	
Int Delay, s/veh	18.2

Movement	EBL	EBR	NBL	NBT	SBT	SBR
Lane Configurations		↱		↑↑	↑↑	↱
Traffic Vol, veh/h	0	220	0	2875	3005	285
Future Vol, veh/h	0	220	0	2875	3005	285
Conflicting Peds, #/hr	0	0	0	0	0	0
Sign Control	Stop	Stop	Free	Free	Free	Free
RT Channelized	-	None	-	None	-	None
Storage Length	-	0	-	-	-	150
Veh in Median Storage, #	0	-	-	0	0	-
Grade, %	0	-	-	0	0	-
Peak Hour Factor	100	100	100	100	100	100
Heavy Vehicles, %	0	1	0	3	4	2
Mvmt Flow	0	220	0	2875	3005	285

Major/Minor	Minor2		Major1		Major2	
Conflicting Flow All	-	1503	-	0	-	0
Stage 1	-	-	-	-	-	-
Stage 2	-	-	-	-	-	-
Critical Hdwy	-	6.92	-	-	-	-
Critical Hdwy Stg 1	-	-	-	-	-	-
Critical Hdwy Stg 2	-	-	-	-	-	-
Follow-up Hdwy	-	3.31	-	-	-	-
Pot Cap-1 Maneuver	0	~ 112	0	-	-	-
Stage 1	0	-	0	-	-	-
Stage 2	0	-	0	-	-	-
Platoon blocked, %				-	-	-
Mov Cap-1 Maneuver	-	~ 112	-	-	-	-
Mov Cap-2 Maneuver	-	-	-	-	-	-
Stage 1	-	-	-	-	-	-
Stage 2	-	-	-	-	-	-

Approach	EB	NB	SB
HCM Control Delay, s$	528.9	0	0
HCM LOS	F		

Minor Lane/Major Mvmt	NBT	EBLn1	SBT	SBR
Capacity (veh/h)	-	112	-	-
HCM Lane V/C Ratio	-	1.964	-	-
HCM Control Delay (s)	-	$ 528.9	-	-
HCM Lane LOS	-	F	-	-
HCM 95th %tile Q(veh)	-	18.1	-	-

Notes

~: Volume exceeds capacity $: Delay exceeds 300s +: Computation Not Defined *: All major volume in platoon

Intersection	
Int Delay, s/veh	3.4

Movement	WBL	WBR	NBT	NBR	SBL	SBT
Lane Configurations						
Traffic Vol, veh/h	35	20	60	25	30	55
Future Vol, veh/h	35	20	60	25	30	55
Conflicting Peds, #/hr	0	3	0	1	1	0
Sign Control	Stop	Stop	Free	Free	Free	Free
RT Channelized	-	None	-	None	-	None
Storage Length	0	-	-	-	-	-
Veh in Median Storage, #	0	-	0	-	-	0
Grade, %	0	-	0	-	-	0
Peak Hour Factor	81	81	81	81	81	81
Heavy Vehicles, %	0	10	2	0	0	5
Mvmt Flow	43	25	74	31	37	68

Major/Minor	Minor1		Major1		Major2	
Conflicting Flow All	233	94	0	0	106	0
Stage 1	91	-	-	-	-	-
Stage 2	142	-	-	-	-	-
Critical Hdwy	6.4	6.3	-	-	4.1	-
Critical Hdwy Stg 1	5.4	-	-	-	-	-
Critical Hdwy Stg 2	5.4	-	-	-	-	-
Follow-up Hdwy	3.5	3.39	-	-	2.2	-
Pot Cap-1 Maneuver	760	941	-	-	1498	-
Stage 1	938	-	-	-	-	-
Stage 2	890	-	-	-	-	-
Platoon blocked, %			-	-		-
Mov Cap-1 Maneuver	739	937	-	-	1497	-
Mov Cap-2 Maneuver	739	-	-	-	-	-
Stage 1	937	-	-	-	-	-
Stage 2	867	-	-	-	-	-

Approach	WB	NB	SB
HCM Control Delay, s	9.9	0	2.6
HCM LOS	A		

Minor Lane/Major Mvmt	NBT	NBR	WBLn1	SBL	SBT
Capacity (veh/h)	-	-	801	1497	-
HCM Lane V/C Ratio	-	-	0.085	0.025	-
HCM Control Delay (s)	-	-	9.9	7.5	0
HCM Lane LOS	-	-	A	A	A
HCM 95th %tile Q(veh)	-	-	0.3	0.1	-

Intersection	
Int Delay, s/veh	5.5

Movement	EBL	EBT	EBR	WBL	WBT	WBR	NBL	NBT	NBR	SBL	SBT	SBR
Lane Configurations												
Traffic Vol, veh/h	15	30	10	20	30	5	10	40	25	5	20	15
Future Vol, veh/h	15	30	10	20	30	5	10	40	25	5	20	15
Conflicting Peds, #/hr	5	0	2	2	0	5	15	0	8	8	0	15
Sign Control	Stop	Stop	Stop	Stop	Stop	Stop	Free	Free	Free	Free	Free	Free
RT Channelized	-	-	None	-	-	None	-	-	None	-	-	None
Storage Length	-	-	-	-	-	-	-	-	-	-	-	-
Veh in Median Storage, #	-	0	-	-	0	-	-	0	-	-	0	-
Grade, %	-	0	-	-	0	-	-	0	-	-	0	-
Peak Hour Factor	86	86	86	86	86	86	86	86	86	86	86	86
Heavy Vehicles, %	0	0	0	0	0	0	0	4	0	0	0	0
Mvmt Flow	17	35	12	23	35	6	12	47	29	6	23	17

Major/Minor	Minor2			Minor1			Major1			Major2		
Conflicting Flow All	170	167	49	163	161	75	55	0	0	84	0	0
Stage 1	59	59	-	94	94	-	-	-	-	-	-	-
Stage 2	111	108	-	69	67	-	-	-	-	-	-	-
Critical Hdwy	7.1	6.5	6.2	7.1	6.5	6.2	4.1	-	-	4.1	-	-
Critical Hdwy Stg 1	6.1	5.5	-	6.1	5.5	-	-	-	-	-	-	-
Critical Hdwy Stg 2	6.1	5.5	-	6.1	5.5	-	-	-	-	-	-	-
Follow-up Hdwy	3.5	4	3.3	3.5	4	3.3	2.2	-	-	2.2	-	-
Pot Cap-1 Maneuver	798	729	1025	806	735	992	1563	-	-	1526	-	-
Stage 1	958	850	-	918	821	-	-	-	-	-	-	-
Stage 2	899	810	-	946	843	-	-	-	-	-	-	-
Platoon blocked, %								-	-		-	-
Mov Cap-1 Maneuver	742	704	1008	752	710	980	1541	-	-	1514	-	-
Mov Cap-2 Maneuver	742	704	-	752	710	-	-	-	-	-	-	-
Stage 1	937	835	-	903	808	-	-	-	-	-	-	-
Stage 2	844	797	-	891	828	-	-	-	-	-	-	-

Approach	EB	WB	NB	SB
HCM Control Delay, s	10.2	10.3	1	0.9
HCM LOS	B	B		

Minor Lane/Major Mvmt	NBL	NBT	NBR	EBLn1	WBLn1	SBL	SBT	SBR
Capacity (veh/h)	1541	-	-	756	744	1514	-	-
HCM Lane V/C Ratio	0.008	-	-	0.085	0.086	0.004	-	-
HCM Control Delay (s)	7.4	0	-	10.2	10.3	7.4	0	-
HCM Lane LOS	A	A	-	B	B	A	A	-
HCM 95th %tile Q(veh)	0	-	-	0.3	0.3	0	-	-

Intersection: 1: Harriman St & NW Oregon Ave/Hawthorne Ave

Movement	EB	WB	NB	SB
Directions Served	LTR	LTR	LTR	LTR
Maximum Queue (ft)	1919	148	726	832
Average Queue (ft)	1420	54	484	453
95th Queue (ft)	2521	260	922	979
Link Distance (ft)	1904	346	715	894
Upstream Blk Time (%)	51	12	43	17
Queuing Penalty (veh)	0	22	0	0
Storage Bay Dist (ft)				
Storage Blk Time (%)				
Queuing Penalty (veh)				

Intersection: 2: Hill St & Hawthorne Ave

Movement	EB	WB	NB	SB
Directions Served	LTR	LTR	LTR	LTR
Maximum Queue (ft)	359	342	718	951
Average Queue (ft)	340	134	501	767
95th Queue (ft)	404	360	881	1188
Link Distance (ft)	346	348	708	917
Upstream Blk Time (%)	90	12	38	59
Queuing Penalty (veh)	111	35	0	0
Storage Bay Dist (ft)				
Storage Blk Time (%)				
Queuing Penalty (veh)				

Intersection: 3: US 97 & Hawthorne Ave

Movement	EB	SB	SB	SB
Directions Served	R	T	T	R
Maximum Queue (ft)	398	321	333	89
Average Queue (ft)	340	54	105	23
95th Queue (ft)	518	403	578	114
Link Distance (ft)	348	905	905	
Upstream Blk Time (%)	87	3	10	
Queuing Penalty (veh)	191	0	0	
Storage Bay Dist (ft)				150
Storage Blk Time (%)				11
Queuing Penalty (veh)				158

Intersection: 4: 1st St & Hawthorne Ave

Movement	WB	NB	SB
Directions Served	LR	TR	LT
Maximum Queue (ft)	69	3	38
Average Queue (ft)	31	0	3
95th Queue (ft)	58	3	21
Link Distance (ft)	450	704	523
Upstream Blk Time (%)			
Queuing Penalty (veh)			
Storage Bay Dist (ft)			
Storage Blk Time (%)			
Queuing Penalty (veh)			

Intersection: 5: 2nd St & Hawthorne Ave

Movement	EB	WB	NB	SB
Directions Served	LTR	LTR	LTR	LTR
Maximum Queue (ft)	47	52	10	14
Average Queue (ft)	30	29	1	1
95th Queue (ft)	51	53	8	8
Link Distance (ft)	450	317	702	527
Upstream Blk Time (%)				
Queuing Penalty (veh)				
Storage Bay Dist (ft)				
Storage Blk Time (%)				
Queuing Penalty (veh)				

Network Summary

Network wide Queuing Penalty: 517

Intersection	
Int Delay, s/veh	5.6

Movement	EBL	EBT	EBR	WBL	WBT	WBR	NBL	NBT	NBR	SBL	SBT	SBR
Lane Configurations												
Traffic Vol, veh/h	70	35	35	60	115	10	30	25	5	5	10	35
Future Vol, veh/h	70	35	35	60	115	10	30	25	5	5	10	35
Conflicting Peds, #/hr	0	0	15	15	0	0	3	0	3	3	0	3
Sign Control	Free	Free	Free	Free	Free	Free	Stop	Stop	Stop	Stop	Stop	Stop
RT Channelized	-	-	None	-	-	None	-	-	None	-	-	None
Storage Length	-	-	-	-	-	-	-	-	-	-	-	-
Veh in Median Storage, #	-	0	-	-	0	-	-	0	-	-	0	-
Grade, %	-	0	-	-	0	-	-	0	-	-	0	-
Peak Hour Factor	90	90	90	90	90	90	90	90	90	90	90	90
Heavy Vehicles, %	2	0	0	0	1	0	4	0	0	0	0	0
Mvmt Flow	78	39	39	67	128	11	33	28	6	6	11	39

Major/Minor	Major1			Major2			Minor1			Minor2		
Conflicting Flow All	139	0	0	93	0	0	526	503	77	503	517	137
Stage 1	-	-	-	-	-	-	230	230	-	268	268	-
Stage 2	-	-	-	-	-	-	296	273	-	235	249	-
Critical Hdwy	4.12	-	-	4.1	-	-	7.14	6.5	6.2	7.1	6.5	6.2
Critical Hdwy Stg 1	-	-	-	-	-	-	6.14	5.5	-	6.1	5.5	-
Critical Hdwy Stg 2	-	-	-	-	-	-	6.14	5.5	-	6.1	5.5	-
Follow-up Hdwy	2.218	-	-	2.2	-	-	3.536	4	3.3	3.5	4	3.3
Pot Cap-1 Maneuver	1445	-	-	1514	-	-	459	474	990	482	465	917
Stage 1	-	-	-	-	-	-	768	718	-	742	691	-
Stage 2	-	-	-	-	-	-	708	688	-	773	704	-
Platoon blocked, %		-	-		-	-						
Mov Cap-1 Maneuver	1445	-	-	1492	-	-	390	419	973	418	411	914
Mov Cap-2 Maneuver	-	-	-	-	-	-	390	419	-	418	411	-
Stage 1	-	-	-	-	-	-	714	668	-	700	657	-
Stage 2	-	-	-	-	-	-	632	654	-	693	655	-

Approach	EB	WB	NB	SB
HCM Control Delay, s	3.8	2.4	15.1	10.9
HCM LOS			C	B

Minor Lane/Major Mvmt	NBLn1	EBL	EBT	EBR	WBL	WBT	WBR	SBLn1
Capacity (veh/h)	423	1445	-	-	1492	-	-	670
HCM Lane V/C Ratio	0.158	0.054	-	-	0.045	-	-	0.083
HCM Control Delay (s)	15.1	7.6	0	-	7.5	0	-	10.9
HCM Lane LOS	C	A	A	-	A	A	-	B
HCM 95th %tile Q(veh)	0.6	0.2	-	-	0.1	-	-	0.3

Intersection	
Int Delay, s/veh	5.3

Movement	EBL	EBT	EBR	WBL	WBT	WBR	NBL	NBT	NBR	SBL	SBT	SBR
Lane Configurations												
Traffic Vol, veh/h	40	0	5	40	140	105	10	60	0	0	45	35
Future Vol, veh/h	40	0	5	40	140	105	10	60	0	0	45	35
Conflicting Peds, #/hr	0	0	2	2	0	0	7	0	5	5	0	7
Sign Control	Free	Free	Free	Free	Free	Free	Stop	Stop	Stop	Stop	Stop	Stop
RT Channelized	-	-	None	-	-	None	-	-	None	-	-	None
Storage Length	-	-	-	-	-	-	-	-	-	-	-	-
Veh in Median Storage, #	-	0	-	-	0	-	-	0	-	-	0	-
Grade, %	-	0	-	-	0	-	-	0	-	-	0	-
Peak Hour Factor	91	91	91	91	91	91	91	91	91	91	91	91
Heavy Vehicles, %	0	0	0	0	1	4	0	0	0	2	0	0
Mvmt Flow	44	0	5	44	154	115	11	66	0	0	49	38

Major/Minor	Major1			Major2			Minor1			Minor2		
Conflicting Flow All	269	0	0	7	0	0	443	450	-	-	395	219
Stage 1	-	-	-	-	-	-	93	93	-	-	300	-
Stage 2	-	-	-	-	-	-	350	357	-	-	95	-
Critical Hdwy	4.1	-	-	4.1	-	-	7.1	6.5	-	-	6.5	6.2
Critical Hdwy Stg 1	-	-	-	-	-	-	6.1	5.5	-	-	5.5	-
Critical Hdwy Stg 2	-	-	-	-	-	-	6.1	5.5	-	-	5.5	-
Follow-up Hdwy	2.2	-	-	2.2	-	-	3.5	4	-	-	4	3.3
Pot Cap-1 Maneuver	1306	-	-	1627	-	-	528	508	0	0	545	826
Stage 1	-	-	-	-	-	-	919	822	0	0	669	-
Stage 2	-	-	-	-	-	-	671	632	0	0	820	-
Platoon blocked, %		-	-		-	-						
Mov Cap-1 Maneuver	1306	-	-	1624	-	-	439	474	-	-	508	820
Mov Cap-2 Maneuver	-	-	-	-	-	-	439	474	-	-	508	-
Stage 1	-	-	-	-	-	-	886	792	-	-	648	-
Stage 2	-	-	-	-	-	-	568	612	-	-	790	-

Approach	EB	WB	NB	SB
HCM Control Delay, s	7	1	14.2	11.9
HCM LOS			B	B

Minor Lane/Major Mvmt	NBLn1	EBL	EBT	EBR	WBL	WBT	WBR	SBLn1
Capacity (veh/h)	469	1306	-	-	1624	-	-	609
HCM Lane V/C Ratio	0.164	0.034	-	-	0.027	-	-	0.144
HCM Control Delay (s)	14.2	7.9	0	-	7.3	0	-	11.9
HCM Lane LOS	B	A	A	-	A	A	-	B
HCM 95th %tile Q(veh)	0.6	0.1	-	-	0.1	-	-	0.5

Intersection	
Int Delay, s/veh	3.4

Movement	WBL	WBR	NBT	NBR	SBL	SBT
Lane Configurations						
Traffic Vol, veh/h	35	20	60	25	30	55
Future Vol, veh/h	35	20	60	25	30	55
Conflicting Peds, #/hr	0	3	0	1	1	0
Sign Control	Stop	Stop	Free	Free	Free	Free
RT Channelized	-	None	-	None	-	None
Storage Length	0	-	-	-	-	-
Veh in Median Storage, #	0	-	0	-	-	0
Grade, %	0	-	0	-	-	0
Peak Hour Factor	81	81	81	81	81	81
Heavy Vehicles, %	0	10	2	0	0	5
Mvmt Flow	43	25	74	31	37	68

Major/Minor	Minor1		Major1		Major2	
Conflicting Flow All	233	94	0	0	106	0
Stage 1	91	-	-	-	-	-
Stage 2	142	-	-	-	-	-
Critical Hdwy	6.4	6.3	-	-	4.1	-
Critical Hdwy Stg 1	5.4	-	-	-	-	-
Critical Hdwy Stg 2	5.4	-	-	-	-	-
Follow-up Hdwy	3.5	3.39	-	-	2.2	-
Pot Cap-1 Maneuver	760	941	-	-	1498	-
Stage 1	938	-	-	-	-	-
Stage 2	890	-	-	-	-	-
Platoon blocked, %			-	-		-
Mov Cap-1 Maneuver	739	937	-	-	1497	-
Mov Cap-2 Maneuver	739	-	-	-	-	-
Stage 1	937	-	-	-	-	-
Stage 2	867	-	-	-	-	-

Approach	WB	NB	SB
HCM Control Delay, s	9.9	0	2.6
HCM LOS	A		

Minor Lane/Major Mvmt	NBT	NBR	WBLn1	SBL	SBT
Capacity (veh/h)	-	-	801	1497	-
HCM Lane V/C Ratio	-	-	0.085	0.025	-
HCM Control Delay (s)	-	-	9.9	7.5	0
HCM Lane LOS	-	-	A	A	A
HCM 95th %tile Q(veh)	-	-	0.3	0.1	-

Intersection	
Int Delay, s/veh	5.5

Movement	EBL	EBT	EBR	WBL	WBT	WBR	NBL	NBT	NBR	SBL	SBT	SBR
Lane Configurations												
Traffic Vol, veh/h	15	30	10	20	30	5	10	40	25	5	20	15
Future Vol, veh/h	15	30	10	20	30	5	10	40	25	5	20	15
Conflicting Peds, #/hr	5	0	2	2	0	5	15	0	8	8	0	15
Sign Control	Stop	Stop	Stop	Stop	Stop	Stop	Free	Free	Free	Free	Free	Free
RT Channelized	-	-	None	-	-	None	-	-	None	-	-	None
Storage Length	-	-	-	-	-	-	-	-	-	-	-	-
Veh in Median Storage, #	-	0	-	-	0	-	-	0	-	-	0	-
Grade, %	-	0	-	-	0	-	-	0	-	-	0	-
Peak Hour Factor	86	86	86	86	86	86	86	86	86	86	86	86
Heavy Vehicles, %	0	0	0	0	0	0	0	4	0	0	0	0
Mvmt Flow	17	35	12	23	35	6	12	47	29	6	23	17

Major/Minor	Minor2			Minor1			Major1			Major2		
Conflicting Flow All	170	167	49	163	161	75	55	0	0	84	0	0
Stage 1	59	59	-	94	94	-	-	-	-	-	-	-
Stage 2	111	108	-	69	67	-	-	-	-	-	-	-
Critical Hdwy	7.1	6.5	6.2	7.1	6.5	6.2	4.1	-	-	4.1	-	-
Critical Hdwy Stg 1	6.1	5.5	-	6.1	5.5	-	-	-	-	-	-	-
Critical Hdwy Stg 2	6.1	5.5	-	6.1	5.5	-	-	-	-	-	-	-
Follow-up Hdwy	3.5	4	3.3	3.5	4	3.3	2.2	-	-	2.2	-	-
Pot Cap-1 Maneuver	798	729	1025	806	735	992	1563	-	-	1526	-	-
Stage 1	958	850	-	918	821	-	-	-	-	-	-	-
Stage 2	899	810	-	946	843	-	-	-	-	-	-	-
Platoon blocked, %								-	-		-	-
Mov Cap-1 Maneuver	742	704	1008	752	710	980	1541	-	-	1514	-	-
Mov Cap-2 Maneuver	742	704	-	752	710	-	-	-	-	-	-	-
Stage 1	937	835	-	903	808	-	-	-	-	-	-	-
Stage 2	844	797	-	891	828	-	-	-	-	-	-	-

Approach	EB	WB	NB	SB
HCM Control Delay, s	10.2	10.3	1	0.9
HCM LOS	B	B		

Minor Lane/Major Mvmt	NBL	NBT	NBR	EBLn1	WBLn1	SBL	SBT	SBR
Capacity (veh/h)	1541	-	-	756	744	1514	-	-
HCM Lane V/C Ratio	0.008	-	-	0.085	0.086	0.004	-	-
HCM Control Delay (s)	7.4	0	-	10.2	10.3	7.4	0	-
HCM Lane LOS	A	A	-	B	B	A	A	-
HCM 95th %tile Q(veh)	0	-	-	0.3	0.3	0	-	-

Intersection: 1: Harriman St & NW Oregon Ave/Hawthorne Ave

Movement	EB	WB	NB	SB
Directions Served	LTR	LTR	LTR	LTR
Maximum Queue (ft)	22	46	68	51
Average Queue (ft)	4	6	32	26
95th Queue (ft)	15	29	56	47
Link Distance (ft)	1904	346	715	894
Upstream Blk Time (%)				
Queuing Penalty (veh)				
Storage Bay Dist (ft)				
Storage Blk Time (%)				
Queuing Penalty (veh)				

Intersection: 2: Hill St & Hawthorne Ave

Movement	EB	WB	NB	SB
Directions Served	LTR	LTR	LT	TR
Maximum Queue (ft)	43	41	58	65
Average Queue (ft)	11	4	26	36
95th Queue (ft)	39	23	48	55
Link Distance (ft)	346	348	706	917
Upstream Blk Time (%)				
Queuing Penalty (veh)				
Storage Bay Dist (ft)				
Storage Blk Time (%)				
Queuing Penalty (veh)				

Intersection: 3: US 97 & Hawthorne Ave

Movement
Directions Served
Maximum Queue (ft)
Average Queue (ft)
95th Queue (ft)
Link Distance (ft)
Upstream Blk Time (%)
Queuing Penalty (veh)
Storage Bay Dist (ft)
Storage Blk Time (%)
Queuing Penalty (veh)

Intersection: 4: 1st St & Hawthorne Ave

Movement	WB	NB	SB
Directions Served	LR	TR	LT
Maximum Queue (ft)	64	9	27
Average Queue (ft)	30	0	2
95th Queue (ft)	56	5	18
Link Distance (ft)	450	704	523
Upstream Blk Time (%)			
Queuing Penalty (veh)			
Storage Bay Dist (ft)			
Storage Blk Time (%)			
Queuing Penalty (veh)			

Intersection: 5: 2nd St & Hawthorne Ave

Movement	EB	WB	NB	SB
Directions Served	LTR	LTR	LTR	LTR
Maximum Queue (ft)	53	58	21	15
Average Queue (ft)	30	29	1	1
95th Queue (ft)	53	55	10	8
Link Distance (ft)	450	317	702	527
Upstream Blk Time (%)				
Queuing Penalty (veh)				
Storage Bay Dist (ft)				
Storage Blk Time (%)				
Queuing Penalty (veh)				

Network Summary

Network wide Queuing Penalty: 0

APPENDIX E: ALL WAY STOP HCM REPORTS/QUEUING REPORTS

Intersection	
Int Delay, s/veh	5.6

Movement	EBL	EBT	EBR	WBL	WBT	WBR	NBL	NBT	NBR	SBL	SBT	SBR
Lane Configurations												
Traffic Vol, veh/h	70	35	35	60	115	10	30	25	5	5	10	35
Future Vol, veh/h	70	35	35	60	115	10	30	25	5	5	10	35
Conflicting Peds, #/hr	0	0	15	15	0	0	3	0	3	3	0	3
Sign Control	Free	Free	Free	Free	Free	Free	Stop	Stop	Stop	Stop	Stop	Stop
RT Channelized	-	-	None	-	-	None	-	-	None	-	-	None
Storage Length	-	-	-	-	-	-	-	-	-	-	-	-
Veh in Median Storage, #	-	0	-	-	0	-	-	0	-	-	0	-
Grade, %	-	0	-	-	0	-	-	0	-	-	0	-
Peak Hour Factor	90	90	90	90	90	90	90	90	90	90	90	90
Heavy Vehicles, %	2	0	0	0	1	0	4	0	0	0	0	0
Mvmt Flow	78	39	39	67	128	11	33	28	6	6	11	39

Major/Minor	Major1			Major2			Minor1			Minor2		
Conflicting Flow All	139	0	0	93	0	0	526	503	77	503	517	137
Stage 1	-	-	-	-	-	-	230	230	-	268	268	-
Stage 2	-	-	-	-	-	-	296	273	-	235	249	-
Critical Hdwy	4.12	-	-	4.1	-	-	7.14	6.5	6.2	7.1	6.5	6.2
Critical Hdwy Stg 1	-	-	-	-	-	-	6.14	5.5	-	6.1	5.5	-
Critical Hdwy Stg 2	-	-	-	-	-	-	6.14	5.5	-	6.1	5.5	-
Follow-up Hdwy	2.218	-	-	2.2	-	-	3.536	4	3.3	3.5	4	3.3
Pot Cap-1 Maneuver	1445	-	-	1514	-	-	459	474	990	482	465	917
Stage 1	-	-	-	-	-	-	768	718	-	742	691	-
Stage 2	-	-	-	-	-	-	708	688	-	773	704	-
Platoon blocked, %		-	-		-	-						
Mov Cap-1 Maneuver	1445	-	-	1492	-	-	390	419	973	418	411	914
Mov Cap-2 Maneuver	-	-	-	-	-	-	390	419	-	418	411	-
Stage 1	-	-	-	-	-	-	714	668	-	700	657	-
Stage 2	-	-	-	-	-	-	632	654	-	693	655	-

Approach	EB	WB	NB	SB
HCM Control Delay, s	3.8	2.4	15.1	10.9
HCM LOS			C	B

Minor Lane/Major Mvmt	NBLn1	EBL	EBT	EBR	WBL	WBT	WBR	SBLn1
Capacity (veh/h)	423	1445	-	-	1492	-	-	670
HCM Lane V/C Ratio	0.158	0.054	-	-	0.045	-	-	0.083
HCM Control Delay (s)	15.1	7.6	0	-	7.5	0	-	10.9
HCM Lane LOS	C	A	A	-	A	A	-	B
HCM 95th %tile Q(veh)	0.6	0.2	-	-	0.1	-	-	0.3

Intersection	
Intersection Delay, s/veh	9
Intersection LOS	A

Movement	EBL	EBT	EBR	WBL	WBT	WBR	NBL	NBT	NBR	SBL	SBT	SBR
Lane Configurations												
Traffic Vol, veh/h	40	0	5	40	140	105	10	60	0	0	45	35
Future Vol, veh/h	40	0	5	40	140	105	10	60	0	0	45	35
Peak Hour Factor	0.91	0.91	0.91	0.91	0.91	0.91	0.91	0.91	0.91	0.91	0.91	0.91
Heavy Vehicles, %	0	0	0	0	1	4	0	0	0	2	0	0
Mvmt Flow	44	0	5	44	154	115	11	66	0	0	49	38
Number of Lanes	0	1	0	0	1	0	0	1	0	0	1	0

Approach	EB	WB	NB	SB
Opposing Approach	WB	EB	SB	NB
Opposing Lanes	1	1	1	1
Conflicting Approach Left	SB	NB	EB	WB
Conflicting Lanes Left	1	1	1	1
Conflicting Approach Right	NB	SB	WB	EB
Conflicting Lanes Right	1	1	1	1
HCM Control Delay	8.1	9.5	8.4	8.1
HCM LOS	A	A	A	A

Lane	NBLn1	EBLn1	WBLn1	SBLn1
Vol Left, %	14%	89%	14%	0%
Vol Thru, %	86%	0%	49%	56%
Vol Right, %	0%	11%	37%	44%
Sign Control	Stop	Stop	Stop	Stop
Traffic Vol by Lane	70	45	285	80
LT Vol	10	40	40	0
Through Vol	60	0	140	45
RT Vol	0	5	105	35
Lane Flow Rate	77	49	313	88
Geometry Grp	1	1	1	1
Degree of Util (X)	0.103	0.065	0.362	0.111
Departure Headway (Hd)	4.833	4.734	4.159	4.532
Convergence, Y/N	Yes	Yes	Yes	Yes
Cap	741	757	868	790
Service Time	2.865	2.763	2.179	2.563
HCM Lane V/C Ratio	0.104	0.065	0.361	0.111
HCM Control Delay	8.4	8.1	9.5	8.1
HCM Lane LOS	A	A	A	A
HCM 95th-tile Q	0.3	0.2	1.7	0.4

Intersection	
Int Delay, s/veh	3.5

Movement	WBL	WBR	NBT	NBR	SBL	SBT
Lane Configurations						
Traffic Vol, veh/h	35	20	60	25	30	55
Future Vol, veh/h	35	20	60	25	30	55
Conflicting Peds, #/hr	0	3	0	15	15	0
Sign Control	Stop	Stop	Free	Free	Free	Free
RT Channelized	-	None	-	None	-	None
Storage Length	0	-	-	-	-	-
Veh in Median Storage, #	0	-	0	-	-	0
Grade, %	0	-	0	-	-	0
Peak Hour Factor	81	81	81	81	81	81
Heavy Vehicles, %	0	10	2	0	0	5
Mvmt Flow	43	25	74	31	37	68

Major/Minor	Minor1		Major1		Major2	
Conflicting Flow All	247	108	0	0	120	0
Stage 1	105	-	-	-	-	-
Stage 2	142	-	-	-	-	-
Critical Hdwy	6.4	6.3	-	-	4.1	-
Critical Hdwy Stg 1	5.4	-	-	-	-	-
Critical Hdwy Stg 2	5.4	-	-	-	-	-
Follow-up Hdwy	3.5	3.39	-	-	2.2	-
Pot Cap-1 Maneuver	746	925	-	-	1480	-
Stage 1	924	-	-	-	-	-
Stage 2	890	-	-	-	-	-
Platoon blocked, %			-	-		-
Mov Cap-1 Maneuver	716	909	-	-	1459	-
Mov Cap-2 Maneuver	716	-	-	-	-	-
Stage 1	911	-	-	-	-	-
Stage 2	867	-	-	-	-	-

Approach	WB	NB	SB
HCM Control Delay, s	10.1	0	2.7
HCM LOS	B		

Minor Lane/Major Mvmt	NBT	NBR	WBLn1	SBL	SBT
Capacity (veh/h)	-	-	776	1459	-
HCM Lane V/C Ratio	-	-	0.088	0.025	-
HCM Control Delay (s)	-	-	10.1	7.5	0
HCM Lane LOS	-	-	B	A	A
HCM 95th %tile Q(veh)	-	-	0.3	0.1	-

Intersection	
Intersection Delay, s/veh	7.5
Intersection LOS	A

Movement	EBL	EBT	EBR	WBL	WBT	WBR	NBL	NBT	NBR	SBL	SBT	SBR
Lane Configurations												
Traffic Vol, veh/h	15	30	10	20	30	5	10	40	25	5	20	15
Future Vol, veh/h	15	30	10	20	30	5	10	40	25	5	20	15
Peak Hour Factor	0.86	0.86	0.86	0.86	0.86	0.86	0.86	0.86	0.86	0.86	0.86	0.86
Heavy Vehicles, %	0	0	0	0	0	0	0	4	0	0	0	0
Mvmt Flow	17	35	12	23	35	6	12	47	29	6	23	17
Number of Lanes	0	1	0	0	1	0	0	1	0	0	1	0

Approach	EB	WB	NB	SB
Opposing Approach	WB	EB	SB	NB
Opposing Lanes	1	1	1	1
Conflicting Approach Left	SB	NB	EB	WB
Conflicting Lanes Left	1	1	1	1
Conflicting Approach Right	NB	SB	WB	EB
Conflicting Lanes Right	1	1	1	1
HCM Control Delay	7.5	7.6	7.5	7.3
HCM LOS	A	A	A	A

Lane	NBLn1	EBLn1	WBLn1	SBLn1
Vol Left, %	13%	27%	36%	12%
Vol Thru, %	53%	55%	55%	50%
Vol Right, %	33%	18%	9%	38%
Sign Control	Stop	Stop	Stop	Stop
Traffic Vol by Lane	75	55	55	40
LT Vol	10	15	20	5
Through Vol	40	30	30	20
RT Vol	25	10	5	15
Lane Flow Rate	87	64	64	47
Geometry Grp	1	1	1	1
Degree of Util (X)	0.097	0.073	0.075	0.052
Departure Headway (Hd)	3.984	4.127	4.2	3.99
Convergence, Y/N	Yes	Yes	Yes	Yes
Cap	888	858	844	885
Service Time	2.059	2.201	2.273	2.073
HCM Lane V/C Ratio	0.098	0.075	0.076	0.053
HCM Control Delay	7.5	7.5	7.6	7.3
HCM Lane LOS	A	A	A	A
HCM 95th-tile Q	0.3	0.2	0.2	0.2

Intersection: 1: Harriman St & NW Oregon Ave/Hawthorne Ave

Movement	EB	WB	NB	SB
Directions Served	LTR	LTR	LTR	LTR
Maximum Queue (ft)	39	48	69	52
Average Queue (ft)	4	7	30	25
95th Queue (ft)	20	30	57	49
Link Distance (ft)	1904	346	715	894
Upstream Blk Time (%)				
Queuing Penalty (veh)				
Storage Bay Dist (ft)				
Storage Blk Time (%)				
Queuing Penalty (veh)				

Intersection: 2: Hill St & Hawthorne Ave

Movement	EB	WB	NB	SB
Directions Served	LTR	LTR	LT	TR
Maximum Queue (ft)	55	120	56	69
Average Queue (ft)	28	61	27	36
95th Queue (ft)	55	97	46	61
Link Distance (ft)	346	348	706	917
Upstream Blk Time (%)				
Queuing Penalty (veh)				
Storage Bay Dist (ft)				
Storage Blk Time (%)				
Queuing Penalty (veh)				

Intersection: 3: US 97 & Hawthorne Ave

Movement
Directions Served
Maximum Queue (ft)
Average Queue (ft)
95th Queue (ft)
Link Distance (ft)
Upstream Blk Time (%)
Queuing Penalty (veh)
Storage Bay Dist (ft)
Storage Blk Time (%)
Queuing Penalty (veh)

Intersection: 4: 1st St & Hawthorne Ave

Movement	WB	NB	SB
Directions Served	LR	TR	LT
Maximum Queue (ft)	65	6	48
Average Queue (ft)	31	0	5
95th Queue (ft)	57	4	26
Link Distance (ft)	450	704	523
Upstream Blk Time (%)			
Queuing Penalty (veh)			
Storage Bay Dist (ft)			
Storage Blk Time (%)			
Queuing Penalty (veh)			

Intersection: 5: 2nd St & Hawthorne Ave

Movement	EB	WB	NB	SB
Directions Served	LTR	LTR	LTR	LTR
Maximum Queue (ft)	56	58	70	51
Average Queue (ft)	30	29	36	27
95th Queue (ft)	55	53	59	53
Link Distance (ft)	450	317	702	527
Upstream Blk Time (%)				
Queuing Penalty (veh)				
Storage Bay Dist (ft)				
Storage Blk Time (%)				
Queuing Penalty (veh)				

Network Summary

Network wide Queuing Penalty: 0