CITY OF BEND

STANDARDS AND SPECIFICATIONS

March 2019

Standards and Specifications

Table of Contents

Part I – Introduction and City Processes

1. Introduction Statement
2. Change Process
    a. Change Process Description
    b. Change Process Flowchart
    c. Change Request Forms
3. Community Development Department (CDD) Process
    a. CDD Process Overview
    b. CDD Process Flowchart
4. Abbreviations
5. City of Bend Special Provisions to the Oregon Standard Specifications for Construction General Conditions

Part II – City of Bend Design Standards

1. General Information
2. Design Submittal Requirements
3. Streets and Temporary Traffic
4. Sanitary Sewer Systems
5. Water
6. Stormwater
7. Grading and Erosion Control
8. Franchise Utilities
9. Canal and Irrigation Laterals
10. Surveying
11. Geotechnical Engineering
12. Landscape Architecture and Irrigation Systems
13. Electrical Systems
14. Instrumentation and Control Systems

Part III – City of Bend Special Provisions to the Oregon Standard Specifications

00200 – Temporary Features and Appurtenances
00300 – Roadwork
00400 – Drainage and Sewers
00600 – Bases
00700 – Wearing Surfaces
00759 – Miscellaneous Cement
00760 – Permanent Traffic Control
00800 – Permanent Traffic Safety and Guidance Devices
01100 – Water Supply System
02000 – Materials Concrete

Part IV – City of Bend Supplemental Standard Specifications for Construction

00331 – Subgrade Stabilization
00645 – Recycled Asphalt Products In Base
00760 – Interlocking Concrete Paver
00902 – Permanent Traffic Control and Illumination Systems
00937 – Preparing and Coating Metal Sign Structures
02220 – Painting and Coating
02230 – Steel Tank Coatings
02930 – Electrical Facilities
02940 – Engine Generator Set
02950 – Instrumentation and Control Component
04010 – Manufacturers Field Services
04020 – Agency Furnished Products
04030 – Equipment Testing Facility Startup and Commissioning

Part V – City of Bend Construction Inspection Requirements

1. Introduction
2. Materials and Submittals
3. Inspection and Authority
4. Other Considerations

Part VI – Standard Drawings

Roadway
Sewer
Water
Storm
Erosion
Landscape

Part VII – Appendices

Appendix A – Example Tier III ROW Plan Set
Appendix B – Example Lift Station Plan Set

PART I

Intro, Processes, Special Provisions to the Oregon Standard Specifications for Construction General Conditions

1. Introduction Statement

The purpose of this document is to provide the City of Bend community with a clear process for designing, bidding, and constructing City infrastructure for both public and private development.

This document is available on the City of Bend website and can be downloaded as a PDF file that can be printed if desired. The City will not provide printed versions of this document, but an electronic version on a CD can be purchased from the City Permit Counter. This document will be maintained and kept current on the City's website. Anyone using this document is encouraged to sign up for the email list serve so they can be notified of any changes or modifications. If users are working from a printed version they should check the City of Bend website for any revisions or changes prior to using. A table of revisions and revision dates, along with what was modified will be maintained on the City website. In addition, any requests for change will also be posted on the website along with the City's response. Users are encouraged to check this document under Part 1, "Change Process" prior to making a request for a change to see if the issue has already been addressed.

The City of Bend Public Works Department and City Engineer are ultimately responsible for maintaining this document and implementation of it. Small technical changes can be made to the Design Standards and Construction Specifications without City Council approval. Substantive changes that have policy ramifications must be approved by the City Council.

2. Change Process Overview

On at least an annual basis, the City will review this document to maintain its consistency and ensure that best practices are being followed. This review will look at consistency with industry design standards, issues specific to the City of Bend including impacts to operations, and changes necessary to maintain compliance with the Oregon Standard Specifications for Construction. These changes may occur on a less than annual basis if the City determines the change as significant and needed. In all cases users on the email list serve will be notified of these changes, and the table of revisions on the City website will also reflect these changes. The latest revision date will also be noted in the footer of pages that have been revised.

In addition to changes made by the City, users can also request a change. There are two types of changes that users can request; changes to this document or a waiver from a requirement within this document. A change request to this document can result in this document being modified which would apply to all projects from that point forward. A waiver is a onetime change that would only apply to a specific project.

A change request from a user must start with filling out the required change request form. All applicable change requests sections must be filled out with as much detail as possible. An engineers stamp is required. This form can either be mailed to the City Engineers office, or can be submitted electronically. Once received the change request form will be posted on the City's website with a notice of decision pending. The City Engineers office will review the change request and make a determination if the change is a major change requirement, or a minor change requirement. Major changes will be expedited for review and decision while minor changes will be reviewed as time and staffing permits. Minor changes may be held and not be acted on until a regular annual review that considers all changes. In any case, the decision process for consideration of the change will follow these steps:

1. The City Engineers Office, will develop a written response with a recommendation on decision of acceptance. If the decision is to not accept the change, the original requestor will be notified and the decision for not accepting the change will be provided and posted on the City website as a response to the original change request.
2. If the City Engineers Office, or the qualified expert, recommend acceptance the written decision with the acceptance recommendation will be provided to affected divisions and staff to receive input with considerations of impacts to operations, financial, and legal. The feedback gathered will be documented in the written recommendations.

3. The City Engineers Office, will review all feedback and make a final recommendation for acceptance or rejection. This final recommendation will include consideration of cause and effect of accepting the change.
4. If the change is accepted the change will be implemented. All documentation for considering the change will be posted with the original change request on the City's website and the original requestor will be notified of the decision.
5. In the event that the City Engineers Office is in disagreement with other City staff the information will be brought forward to the Public Works Director for further consideration. The Public Works Director may decide to solicit input from the City Manager, City Attorney, or possibly the City Council for a final decision.

All waivers from a design standard or construction specification must be approved by the City Engineers Office. The request for a waiver must be submitted in writing to the City Engineer and must specify how it meets the criteria set forth below. The engineer of record stamp is required. The process for review will follow the same five step process as outlined for a change request. In other words, all of the steps outlined above will be followed with the exception that a waiver will not result in a change to this document, but the applicant will be granted a waiver if it is approved. If a waiver is not approved, the applicant must use the criteria set forth in this document. A waiver will be processed as quickly as possible; however, the applicant should understand that this process could take several weeks depending on the amount of review required.

The criteria for a waiver will be based on a determination that:

1. the waiver or modification will not harm or will be beneficial to the public in general;
2. the waiver and modification are not inconsistent with the general purpose of ensuring adequate public facilities; and
3. one or more of the following conditions are met:
    a. The modification or waiver is necessary to eliminate or reduce impacts on existing drainage patterns or natural features such as riparian areas, significant trees or vegetation, or steep slopes.
    b. An existing structure such as a substantial retaining wall makes widening a street or right-of-way or required placement of lines impractical or undesirable.
    c. Street access to an existing lot would be eliminated without the waiver or modification.
    d. Building on an existing lot would be infeasible without the waiver or modification.
    e. The standard is a street or right-of-way standard and existing structures on the same side of the block make future widening of the remainder of

the street or right-of-way unlikely and the additional width on the project site would not be beneficial for sidewalks or parking without the extension for the rest of the block.

f. The modification or waiver is needed to allow development of, or street access to, the property because of topographical constraints.
g. The existing infrastructure (a) does not meet current standards, (b) is and will remain functionally equivalent to current standards, and (c) there is little likelihood that current standards will be met in the area.
h. The installation of the required improvements would likely cause unacceptable significant adverse environmental impacts and the waiver/modification would avoid such impacts.
i. There is insufficient right-of-way to allow a full width street cross section and additional right-of-way cannot be provided.
j. There is no street or right-of-way adjacent to the property and easement access has been obtained across private property.
k. Required street frontage improvements for individual single-family dwellings could best be accomplished by planned area-wide improvements at a future date.
l. The City has conflicting or inconsistent standards and the proposal would comply with one set of adopted standards. Standards are conflicting or inconsistent only when it is not possible to comply with both. In most situations, the more recently adopted standard should be followed and the older standard may be waived.

Any waiver or modification of applicable standards and specifications shall be the minimum needed to allow development, and maximization of the number of lots or parcels in a land division is not a reason to allow a waiver or modification.

In either case of a change request or a waiver, the City Engineers decision once reached will be final.

Change Process Flowchart

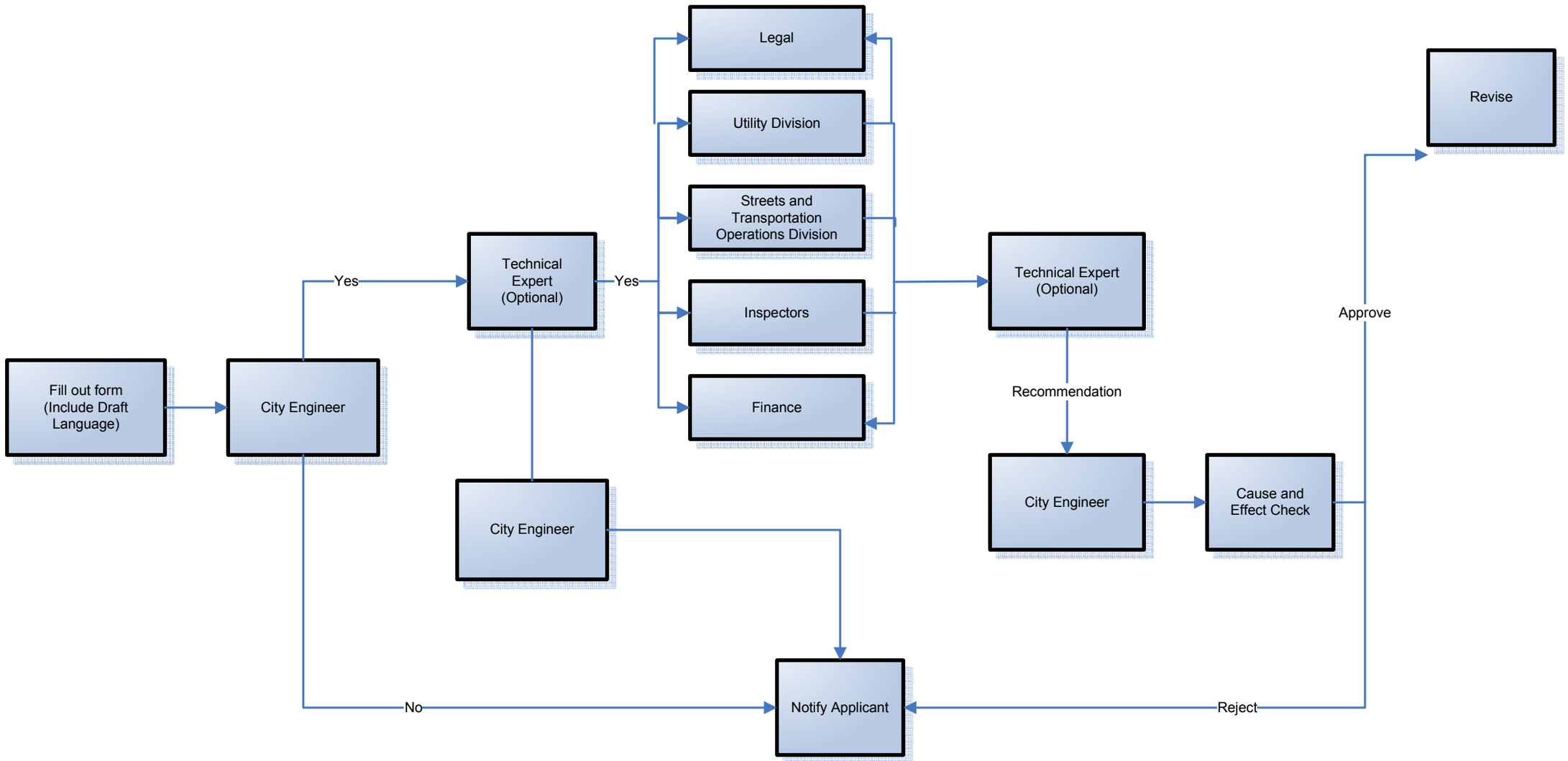

(c) Change Request Forms

Forms may be accessed on the City website at

https://www.bendoregon.gov/government/departments/community-development/private-development-engineering-services/standards-specs

3. Community Development Department Overview

The City of Bend Permit Center is located with the Community Development Department (CDD) and provides a 'one-stop shop' for all private development related permitting. Permit Center staff are dedicated to meeting the needs of new development interests while protecting the City's vital infrastructure. Permit processes are a coordinated effort of the developer, City Public Works, Planning, and Building Departments, as well as other affected agencies.

Development permit applications are processed through the Permit Center including land use proposals, engineering construction plans, work in the public right of way and lane closures, grading and drainage, revocable uses within public right of way, plats, and various development related dedications, releases, and agreements. Applications received at the Permit Center are routed to the appropriate departments and agencies for review and comment prior to final approval. The respective application processes, responsibilities, and timelines are generally described in the flowchart in Part I, Section 3b.

Map of Permits and Processes

	7 to 90 DAYS	14 TO 21 DAYS	5 DAYS	7 DAYS	15 DAYS	7 DAYS
Application Process	**Land Use Review**	**CONSTRUCTION PLAN REVIEW**	**ROW**	**APPLICATION FOR GRADING/ DRAINAGE PERMIT**	**REVOCABLE PERMIT**	**DEDICATION DEED/ QUIT CLAIM DEED**
Required action by applicant	➢ **Pre-app meeting (optional) (7 day review period)** -Provide application with proposed plan for review. ➢ **Completeness check review for buildings and building additions over 2,000 square feet (10 day review period).** -Provide application with required materials -Provide missing items determined at completeness check meeting prior to submitting formal land use application. ➢ **Land Use application after completeness check review (if applicable) is submitted (90 day review period).** -Submit all required materials, -Await review and decision. -Comply with all required conditions.	➢ Submit construction plans with construction plan review application pay review fee ➢ Submit revision if required by PDE. ➢ Submit 2 mylars and disk when revisions complete. ➢ Sign PFIA (Public Facilities Improvement Agreement) ➢ Schedule a pre-con	➢ Submit drawing with ROW Application and pay fee. ➢ City approved contractor must be used for work.	➢ Grading and/or drainage improvements as part of building permit will require submittal of grading and drainage plan as part of the building plan set. Payment for review will be at the time of building permit pick up ➢ Grading and/or drainage as an action that is separate from any other permit will require submittal of Grading/Drainage Application and payment of applicable fee.	➢ Submit application with required materials, pay fee. ➢ Letter or Memorandum describing the activity in the City right-of-way, including location [address or taxmap number] and duration of project. ➢ City approved contractor required (if conducting work in the ROW)	➢ Submit application with required materials ➢ Identify if Land Use Notification ➢ Identify Ownership ➢ Current Preliminary Title Report ➢ Trust Deed/Mortgage/ ➢ Identify Line of Credit ➢ Legal description ➢ Exhibit Map of legal description ➢ Warranty Deed for Dedication of Right of Way or land conveyed to the City of Bend ➢ Fee for Dedication ➢ Maintenance bond if new infrastructure
PUW Responsibility	➢ **Pre-app (none)** ➢ **Completeness check** -Transportation Division uses checklist to determine if complete. ➢ **Land use application** -Review and comment on submitted plans and application materials.	➢ Review original construction plans provide comments. ➢ Review revisions if necessary ➢ Hold pre-con after PFIA and construction plans are signed	➢ Assist in review as directed by Private Development Engineering. ➢ Inspect improvements and sign off when approved..	➢ Inspect improvements and sign off when standards are met and approved.	➢ Transportation Division reviews application. ➢ Prepare agreement to allow use of ROW. ➢ Returns agreement to applicant.	➢ Request dedication or quit claim as part of a land use decision. ➢ Outside of land use decision process, respond to permit center on inquiries involving request for dedication or quit claim.
CDD Responsibility	➢ **Pre-app meeting** -Permit Center collects fee and takes in application, schedules meeting -PDE attends meeting and provides comments ➢ **Completeness Check** -Permit Center collects fee and takes in application, schedules meeting -PDE Uses checklist to determine if are required items have been submitted, notes what items are missing ➢ **Land Use Application** -Permit Center collects fee and takes in application. -Private Development Engineer comments on plan and relays infrastructure improvements requirements to customer and planner. -Planner collects all comments issues Review and Decision with conditions of approval.	➢ Permit Center collects fees and takes in construction plans and application. ➢ PDE reviews and relays PDE and PW comments to applicant, may require revisions. ➢ Reviews revisions if required. ➢ PDE Informs applicant to submit mylars and disk for final signature. ➢ PDE signs construction plans. ➢ Permit Center creates PFIA for applicant's signature.	➢ Permit Center collects fee and takes in drawing and application. ➢ Permit center performs initial review. ➢ Review revisions if necessary ➢ Approve plans and route to Public Works Inspectors and Applicant.	➢ Permit Center collects fee at time of a intake for Grading/Drainage application. ➢ Permit Center collects Grading and Drainage review fee at the time of building permit pick up if grading and drainage is reviewed as part of building permit ➢ PDE performs initial review. ➢ Review revisions if necessary ➢ Approve plans and route to Public Works Inspectors and Applicant.	➢ Permit Center collects fee and takes in application. ➢ Rotes application to Transportation Division	➢ Permit Center collects fee and takes in application. ➢ PDE reviews request and confirms that proposal is acceptable. ➢ Upon determination that the request is acceptable, Permit Center prepares dedication/quit claim deed and routes to City manger for signature. ➢ City Mangers signs documents and returns to Permit Center. ➢ Permit Center staff records deed with the County Clerks office.

4. Abbreviations

AASHTO	American Association of State Highway and Transportation Officials
AC	asphalt concrete
ADA	Americans with Disabilities Act
ADAAG	Americans with Disabilities Act Accessibility Guidelines
AFD	adjustable frequency drive
AI	analog input
AMR	automatic meter reading
ANSI	American National Standards Institute
AO	analog output
APWA	American Public Works Association
AS	adjustable speed
ASAE	American Society of Agricultural Engineers
A.S.L.A	American Association of Landscape Architects
ASTM	American Society for Testing and Materials (ASTM International)
ATS	automatic transfer switch
AWWA	American Water Works Association
AWG	American Wire Gauge
BMP	best management practice
CAD	computer-aided design
CBR	California Bearing Ratio
CC&R	conditions, covenants and restrictions
CDR	concept drainage report
cfm	cubic feet per minute
CFR	Code of Federal Regulations
cfs	cubic feet per second
CIP	capital improvement project
CIS	Oregon Legislative Commission on Indian Services
CMP	corrugated metal pipe
CN	curve number
COIC	Central Oregon Intergovernmental Council
COSM	Central Oregon Stormwater Manual
CS	constant speed
CT	current transformer

CTAPE	Chemical Technology Assessment Protocol
DBH	diameter at breast height
DCCS	Deschutes County Coordinate System
DCP	dynamic cone penetrometer
DEQ	Oregon Department of Environmental Quality
DI	discrete input
DI-120	discrete input, 120VAC
DI-24	discrete input, 24VDC
DO	discrete output
DO-120	discrete output, 120VAC
DO-24	discrete output, 24VDC
DSL	Oregon Division of State Lands
DTM	Digital Terrain Model
Ecology	Washington State Department of Ecology
ENT	Ethernet
EPA	U.S. Environmental Protection Agency
ESAL	equivalent single-axle load
ESC	erosion and sediment control
ET	evapotranspiration
DTM	Digital Terrain Model
FEMA	Federal Emergency Management Agency
FERC	Federal Energy Regulatory Commission
fps	feet per second
ft^2	square feet
ft/ft	feet per foot
FHWA	Federal Highway Administration
FPN	Fine Print Note
FROPT	flow restrictor oil pollution control tees
FRP	fiberglass-reinforced plastic
FWD	falling weight deflectometer
GFCI	ground fault circuit interrupter
gpad	gallons per acre day
gpcd	gallons per capita per day
GFI	ground fault indicator
gpm	gallons per minute
GPS	global positioning system
GSC	geotechnical site characterization
GUI	graphical user interface
HCl	hydrochloric acid

HGL	hydraulic grade line
HMI	human-machine interface
HPS	High-pressure sodium
HOA	Homeowner's Association; hand, off, auto
HVAC	heating, ventilating, and air conditioning
IBC	*International Building Code*
I/O	input/output
I&C	instrumentation and control
ICC	International Code Council
ICEA	Insulated Cable Engineers
I-D-R	rainfall intensity-duration-recurrence interval
IEEE	Institute of Electrical and Electronics Engineers
IES	Illuminating Engineering Society
IFC	*International Fire Code*
ISA	Instrument Society of America
kcmil	1,000 circular mil
kW	kilowatt
LCCA	life-cycle cost analysis
LDP	Local Datum Plane
mA	milliampere
mgd	million gallons per day
mg/kg	milligrams per kilogram
mg/L	milligrams per liter
MCC	motor control center
MDFT	minimum dry film thickness, mils
MDFTPC	minimum dry film thickness per coat, mils
mil	1/1,000 inch
NACE	National Association of Corrosion Engineers International
mph	miles per hour
MTS	manual transfer switch
MUTCD	Manual on Uniform Traffic Control Devices
NACE	National Association of Corrosion Engineers
NEC	*National Electrical Code*
NECA	National Electrical Contractors Association
NEMA	National Electrical Manufacturers Association
NETA	International Electrical Testing Association
NFPA	National Fire Protection Association
NGVD	National Geodetic Vertical Datum
NOAA	National Oceanic and Atmospheric Administration

NPDES	National Pollutant Discharge Elimination System
NPGS	nonpollutant generating surface
NRCS	Natural Resource Conservation Service
O&M	operations and maintenance
O.A.L.A.	Oregon Association of Landscape Architects
OAR	Oregon Administrative Rules
ODFW	Oregon Department of Fish and Wildlife
ODOT	Oregon Department of Transportation
OISC	Oregon Invasive Species Council
OPRD	Oregon Parks and Recreation Department
OR-OSHA	Oregon Occupational Safety and Health Department
ORS	Oregon Revised Statutes
OSS	Oregon Standard Specifications
OSHA	Occupational Safety and Health Act
OSU	Oregon State University
P&ID	process and instrumentation diagram
PDS	product data sheet
PFCC	power factor correction capacitor
PGS	pollutant-generating surface
PLC	programmable logic controller
P.O.C.	point of connection
PROWAG	Public Rights-of-Way Accessibility Guidelines
PSDS	paint system data sheet
psi	pounds per square inch
PVC	polyvinyl chloride
ROW	Right(s)-of-Way
RPBA	reduced pressure backflow assembly
RPBD	reduced pressure backflow prevention device
RTU	remote terminal units
SBUH	Santa Barbara unit hydrograph
SCADA	supervisory control and data acquisition
SDA	Special Drainage Area
SFPG	square feet per gallon
SFPGPC	square feet per gallon per coat
SHPO	State Historic Preservation Office
SP	surface preparation
SSPC	Steel Structures Painting Council; Society for Protective Coatings
SWAT	Smart Watering Advanced Technology
TAPE	Technology Assessment Protocol

TCP	Traffic Control Plan
TPH	total petroleum hydrocarbons
TSS	total suspended solids
TVSS	transient voltage surge suppressor
UIC	underground injection control
UL	Underwriters Laboratories, Inc.
ULC	ultrasonic controller
UPS	uninterruptible power supply
USACE	U.S. Army Corps of Engineers
USCG	U.S. Coast Guard
USDA	U.S. Department of Agriculture
USGS	United States Geological Survey
V	volt
VAC	volt, alternating current
VDC	volt, direct current
WQC	Water Quality Certification
WSDOT	Washington State Department of Transportation

5. Special Provisions to the Oregon Standard Specifications

TABLE OF CONTENTS

INTRODUCTION
Section 00110 – Organization, Conventions, Abbreviations, and Definitions
Section 00120 – Bidding Requirements and Procedures
Section 00130 – Award and Execution of Contract
Section 00140 – Scope of Work
Section 00150 – Control of Work
Section 00160 – Source of Materials
Section 00165 – Quality of Materials
Section 00170 – Legal Relations and Responsibilities
Section 00180 – Prosecution and Progress
Section 00190 – Measurement of Pay Quantities
Section 00195 – Payment
Section 00196 – Payment for Extra Work
Section 00197 – Payment for Force Account Work
Section 00199 – Disagreements, Protests and Claims

INTRODUCTION AND APPLICATION

The Special Provisions modify the Oregon Standard Specifications for Construction General Conditions Volume I (also referred to as the "OSS Volume I General Conditions"). The numbering system is intended to match the numbering system in the OSS Volume I General Conditions. The OSS Volume I General Conditions apply as amended by these Special Provisions. Any OSS Volume I General Conditions not amended by these Special Provisions applies directly without modification. Definitions and abbreviations in the OSS Volume I General Conditions apply to these Special Provisions, except to the extent modified by the Special Provisions.

Section 00110 – Organization, Conventions, Abbreviations and Definitions

Comply with Section 00100 of the General Conditions modified as follows:

00110.10 Abbreviations – The following abbreviation applies in addition to the abbreviations defined in the Standard Conditions.

NFPA - National Fire Protection Association
OSS – Oregon Standard Specifications for Construction

00110.20 Definitions –City The following definitions are in addition to or modify the definitions in the Standard Conditions.

As Approved - The words "as approved", unless otherwise qualified, shall be understood to be followed by the words "by the City".

Agency – The City.

City – The City of Bend, including its duly authorized representatives. The City is described as the Agency in the OSS documents.

Developer - A private entity who has expressed the intention of providing, or who has undertaken the providing, of some facility, structure, or like project to be accepted for maintenance and ownership by the City.

Engineer - The City Engineer or designee.

Laboratory - Any laboratory used or approved by the City. This may or may not be the same testing laboratory as designated in the OSS.

Legal Holiday - The following, subject to subsequent change by law, are legal holidays: Sunday, New Year's Day, Martin Luther King Jr. Day, President's Day, Memorial Day, Independence Day, Labor Day, Veteran's Day, Thanksgiving and the day after Thanksgiving, Christmas, and those days declared as holidays by the City. When a legal holiday other than Sunday falls on a Sunday, the immediate following Monday is a legal holiday. This listing replaces the OSS designations.

Plans – The following expands and replaces the OSS 00100.20 definition of Plans: This is in addition to the OSS definition of Plans. The term "Plans" refers to the official plans, profiles, cross-sections, elevations, details, and other working drawings and supplementary drawings, or reproductions thereof, signed by the Engineer, that show the location, character, dimensions and details for the work to be performed. Plans

may either be bound in the same book as the balance of the Contract Documents, or bound in separate sets, and are a part of the Contract Documents regardless of the

method of binding. Plans are Standard and Supplemental Drawings, and approved unstamped and reviewed stamped Working Drawings (see 00150.10 and 00150.35 in the OSS).

Standard Conditions – Oregon Standard Specifications for Construction, Volume 1 (General Conditions).

Working Day – The City working day is any and every calendar day excluding Saturdays, Sundays, and legal holidays. Unless otherwise permitted, a working day occurs between the hours of 7:00 a.m. and 6:30 p.m.

Section 00120 – Bidding Requirements and Procedures

The only portion of General Conditions Section 00120 that applies is Section 00120.17. All other subsection of Section 00120 are deleted. The following additional section 00120.14 is added:

00120.14 Verification of Data – Contractor has inspected all work sites and has carefully reviewed the plans and specification and understands the nature and location of the work; the conformation of the grounds; the character, quality, and quantities needed preliminary to and during the prosecution of the work; the general and local conditions; and all other matters which can in any way affect the work. No verbal agreement or conversation with any officer, agent, or employee of the City, either before or after the execution of this Agreement, shall affect or modify any of the terms or obligations of the Contract Documents.

Section 00130 – Award and Execution of Contract

00130 – Section 00130 of the General Conditions is deleted.

Section 00140 – Scope of Work

Comply with Section 00140 of the General Conditions modified as follows:

00140.00 Purpose of the Contract – ADD the following to OSS 00140.00:

- Additional copies of Contract Documents or Plans may be obtained upon request by paying the actual cost of reproducing the Contract Documents or Plans.
- Nothing in the Agreement shall be construed as vesting in the Contractor any right to the property or in the material used after acceptance by the City. All materials shall become the property of the City upon being accepted.
- City shall furnish, as indicated in the Contract Documents and not later than the date when needed by Contractor, the lands upon which the Work is to be done, access rights-of-way, and other lands that are designated for the use of Contractor. Easements for permanent structures or permanent changes in existing facilities will be obtained and paid for by the City, unless otherwise specified in the Contract Documents. If Contractor believes that any delay in City furnishing these lands or easements entitles him/her to an extension of the Contract Time, he may make claim thereof. The Contractor shall provide for all additional lands and access thereto that may be required for temporary construction facilities or storage of materials and equipment.
- The Contractor shall confine its equipment, the storage of materials, and the operation of its workmen to limits shown on the plans or indicated by law, ordinances, permits, or directions of the Engineer, and shall not unreasonably encumber the premises with its materials.

ADD the following subsection:

00140.05 Cleaning and Site Maintenance – The Contractor shall, at all times, at its own expense and without further order, keep property on which work is in progress free from accumulations of waste material or rubbish caused by employees or by the Work, and at all times during the construction period shall maintain structure sites, rights-of-way, adjacent property, and the surfaces of streets and roads on which work is being done in a safe condition for the Contractor's workers and the public. Accumulation of waste materials that might constitute a fire hazard will not be permitted. Spillage from the Contractor's hauling vehicles on public or private roads and parking areas shall be promptly cleaned up. Upon completion of the construction, the Contractor shall, at its own expense, remove all temporary structures, rubbish, and waste materials resulting from its operations.

Upon failure of the Contractor to provide cleanup within 24 hours of being directed in writing to do so by the Engineer, the City, or an agent retained by the City, may complete the cleanup and the cost thereof, plus 10 percent for handling, shall be deducted from any payment due the Contractor.

ADD the following subsection:

00140.06 Cutting and Patching – The Contractor shall do all cutting, fitting, or patching of its work that may be required to make its several parts come together properly, and fit it to receive or be received by work of other contractors shown by the Plans.

ADD the following subsection:

00140.07 Performance Testing – Operating equipment and systems shall be performance- tested in the presence of the Engineer to demonstrate compliance with the specified requirements. Performance testing shall be conducted under the specified design operation conditions or under simulated operating conditions recommended or approved by the Engineer. The testing shall be scheduled with the Engineer at least 1 week in advance of the planned date for testing and include a factory representative on site.

(Use the following subsection .60 when the Contractor may be required to do Extra Work items. Listed items are not to be biddable work items. Delete the example and insert work required.)

00140.60 Extra Work – ADD the following to the end of this subsection:

Construction items that may be required as Extra Work to complete the Project and that are not covered by the Special Provisions or listed Pay Items may include, but are not necessarily limited to, the following:

- Example: Class 3 Preparation for bridge deck resurfacing

Section 00150 – Control of Work

Comply with Section 00150 of the General Conditions modified as follows:

DELETE sections 00150.05 and 00150.10.

ADD the following subsection:

00150.14 Construction Staking – All survey work shall be conducted by or under the supervision of a Registered Professional Land Surveyor or Professional Engineer, licensed in the State of Oregon. The Contractor will be responsible for providing all construction staking as required to complete the Work.

(a) Stakes – Construction stakes and stakes that are reference points for construction work shall be conspicuously marked. It shall be the responsibility of the Contractor to inform its employees and its Subcontractors of their importance and the necessity for their preservation.

(1) The Contractor shall provide vertical and horizontal construction staking in proximity of the Work.

(2) Construction staking shall be provided at 50-foot intervals on tangent and 25-foot intervals on curves.

(3) The guard stakes should contain the following information:

- Engineer's station (on back)
- Offset from line (underlined)
- Offset from control point (circled)
- Cut or fill to grade
- Distance right or left from centerline on curb stakes (on back)

(b) Flagging Code – A color code may be established during the course of the project indicating specific colors for the various kinds of stakes to be set.

(c) Sewer – Both gravity and pressure sewer lines shall be construction staked by means of an offset line with pipe invert cut information provided.

(1) Finish grades shall be provided as required.

(2) Manholes shall have two reference points (swing-ties) indicating the center of the manhole, flow invert elevation, and finish grade. Upon the completion of sub grade, the top of the manhole shall be staked with the finish grade and elevation by means of four offset stakes in a cross pattern so that the street slope and cross slope will be matched perfectly.

(3) Services shall be staked as required by the Engineer.

(d) Water – Waterlines shall be staked by means of an offset line at the appropriate intervals.

(1) Fire hydrants shall have two reference points (swing-ties) indicating the center of the fire hydrants. Finish grades shall be provided as required.

(2) Services shall be staked as required by the Engineer

(e) Street – Prior to commencing construction, clearing limits shall be established.

(1) Where a significant (greater than 3-foot) cut or fill is required for sub grade, slope stakes and construction staking for sub grade will be provided.

(2) Curb line shall be staked by means of an offset line no more than 6 feet offset from the face of curb, showing the cut or fill to the finish work. Said stakes shall be protected and saved for a period of 5 working days after construction of curbs to enable the Inspector to approve the alignment and grade. In addition to the above staking requirements, catch basins, points of curvature and tangency, and ends of curb radii shall be provided with a curb stake.

(3) Base rock shall be staked by painting an appropriate target on the curb and providing construction stakes (blue tops) on centerline. On streets of 48 feet or greater width, blue tops will also be required at the quarter points. Blue tops will also be provided at the gutter line for the centerline and gutter lines of any intersecting street.

(f) Structures – All structures shall be staked to the line and grade as shown on the plans or as directed by the Engineer.

00150.15 Construction Stakes, Lines, and Grades – REPLACE OSS 01150.15 with the following:

(a) General – The Contractor will perform no work until the Engineer inspects and approves stakes, lines, and grades laid out by the Contractor.

(b) Agency Responsibilities – The Engineer will:

- Inspect Contractor's established lines, grades, Slopes, Cross Sections, and curve super-elevations for roadwork.

(c) Contractor Responsibilities – The Contractor shall:

- Lay out and set construction stakes and marks to establish the lines, grades, Slopes, Cross Sections, and curve super-elevations for roadwork.

- Provide a set of construction stakes for line and grade for each phase of the Work.
- Set benchmarks and stakes for centerline of Bridges and bents.
- Calculate and provide finish deck grades.
- Inform the Engineer when stakes are available for inspection.
- Coordinate construction to provide sufficient area for performing surveying work efficiently and safely.
- Perform work in a manner as to preserve stakes and marks.
- Set any reference lines for automatic control from the control stakes.

ADD the following subsection:

00150.19 Site Visits and Inspection – Engineer and/or Inspector will make periodic visits to the site to observe the progress and quality of the executed Work and to determine, in general, if the Work is proceeding in accordance with the Contract Documents. They will not be required to make exhaustive or continuous onsite inspections to check the quality or quantity of the Work. Their efforts are directed toward providing assurance for the City that the completed project will conform to the requirements of the Contract Documents. On the basis of their onsite observations as an experienced and qualified design professional, they will keep City informed on the progress of the Work and will endeavor to guard City against defects and deficiencies in the work of Contractors.

ADD the following subsection:

00150.26 Right to Retain Imperfect Work – If any work done or material furnished under this Agreement shall prove defective and not in accordance with the Plans and Specifications, and if the imperfection is not be of sufficient magnitude or importance to make the work dangerous or undesirable, or if the removal of the work will create conditions that are dangerous or undesirable, the City shall have the right and authority to retain the defective work and adjust the amount to be paid for the imperfect work.

ADD the following subsection:

00150.27 Use of Completed Portions – The City shall have the right to take possession of and use any completed or partially completed portions of the Work, notwithstanding the time for completing the entire Work or such portions that may not have expired. Such taking possession and use shall not be deemed an acceptance of any work not completed in accordance with the Contract Documents. If the use increases the cost of the Work, or delays the completion of the Work, the Contractor may be entitled to extra compensation or an extension of time, or both and may submit a written claim for additional compensation or extension of time to the Engineer. The Engineer will review the claim and determine its validity.

00150.35(c) Number and Size of Drawings – REPLACE with the following**:**

(c) Number and Size of Drawings - The Contractor shall submit Working Drawings according to one of the following methods:

(1) Paper Submittal - For paper submissions, submit seven copies of Working Drawings for steel Structures and six copies of Working Drawings for other Structures to the Engineer. The submitted copies shall be clear and readable. Drawing dimensions shall be 8-1/2 inches by 11 inches, 11 inches by 17 inches, or 22 inches by 34 inches in size. One copy of the submitted Working Drawings will be returned to the Contractor after processing. The Contractor shall submit up to four additional copies to the Engineer for processing that the Contractor would like to have returned.

(3) **Electronic Submittal** – (If specified as allowed in the Contract) For electronic submissions, submit Working Drawings according to the "Guide to Electronic Shop Drawing Submittal", which is available from the Engineer.

00150.35,(d) Processing Working Drawings – REPLACE 00.150.35 **(1)** and **(2)** with the following:

(1) Stamped Working Drawings – Stamped Working Drawings will be designated as "reviewed" or "reviewed with comments" by the Engineer.

(2) Unstamped Working Drawings – Unstamped Working Drawings will be designated on the face of the Drawing as "approved", "approved as noted", or "returned for correction" by the Engineer.

00150.40,(a) Cooperation and Superintendence by the Contractor – ADD the following bullet as follows:

- Maintain on the job site, and make available to the Engineer upon request, one current marked-up set of the Design Drawings that accurately indicate all approved variations in the completed Work that differ from the original design information shown on the Drawings.

(Use the following subsection .50(f) when listing utility information.)

00150.50 Cooperation with Utilities –

(ADD the following subsections.)

(f) Utility Information:

-

(Use the following paragraph when no anticipated utility conflicts exist.)

There are no anticipated conflicts with the Utilities listed below. Contact those Utilities having buried facilities and request that they locate and mark them for protection prior to construction.

Utility	Contact Person's Name and Phone Number
1.	
2.	
3.	
4.	

(Use the following paragraph when utility adjustments are the responsibility of the City.)

Arrangements for removing, relocating, or adjusting Utilities on the Project are the responsibility of the County (City). Contact the County (City) for information regarding these arrangements.

(Use the following paragraph on projects with organizations that may be adjusting utilities.)

The following organizations may be adjusting Utilities within the limits of the Project during the period of the Contract, with relocation work estimated to be completed by the following dates (times):

Utility	Estimated Completion Date (Time)
1. (Utility company - "Gas Company") (Contact person's name and phone number)	

(Use the following paragraph when high-pressure gas lines exist on site.)

In the immediate area of the high-pressure gas lines, when moving any equipment, excavating, driving piles, boring, or other road construction activities, increase the Reasonable Accuracy Zone from 24 inches, as defined in OAR 952-001-010, to 10 feet. Exceptions require written approval from the "Gas Company" and may require an on-site safety watcher, at no cost to the Contractor.

2. (Repeat as needed - "Power Company")

(Use the following paragraph when power lines overhang work areas.)

Energized power lines overhang portions of the Work with a minimum vertical clearance of 18 feet. Contractor shall maintain at least 10 feet of safety clearance.

3.

4.

This Project is located within the Oregon Utility Notification Center area, which is a Utilities notification system for notifying owners of Utilities about work being performed in the vicinity of their facilities. The Utilities notification system telephone number is 811 (or use the old number, which is 1-800-332-2344).

(Use the following subsection .55 when there is an existing specific City contract that will be performed within the project site and the Contractor is required to cooperate with the other City contractor. List the contract name, the contractor's name and on-site contact number, and the estimated time the other specific contract work will be taking place within the project limits. Delete the example.)

00150.55 Cooperation with Other Contractors – The following contract work will be ongoing within the Project site during the following times:

Contract Name (Contractor's Name)	**Estimated Times (From - To)**

(For example - Your project's bid opening is July 4, 2005, so:
OR99E Howell Prairie Rd-Wauconda Rd. Aug 2005 to Oct 31, 2005
Dewey Cheatum Inc. 541.679.5555 (On-Site))

00150.55 Cooperation with Other Contractors – ADD the following to OSS 00150.55:

If any part of the Contractor's work depends, for proper execution or results, upon the work of any other contractor, the Contractor shall inspect and promptly report to the Engineer any defects in the other work that render it unsuitable for proper execution and results. The Contractor's failure to so inspect and report shall constitute an acceptance of the other contractor's Work as fit and proper for the reception of its work, except as to defects that may develop in the other contractor's work after execution of its work.

ADD the following subsection:

00150.76 Protection of Property – The Contractor shall adopt every practical means and comply with all laws, ordinances, and regulations in order to minimize interference to traffic and inconveniences, discomfort, and damage to the public, including the provision of adequate dust control measures. All obstructions to traffic shall be guarded in accordance with the "Manual on Uniform Traffic Control Devices."

The Contractor shall not trespass upon private property and shall be responsible for all injury or damage to persons or property, directly or indirectly, resulting from its operations in completing this Work. They shall comply with the laws and regulations of the City, county and state, relating to the safety of persons and property, and will be held responsible and required to make good any injury or damage to persons or property caused by carelessness or neglect on the part of the Contractor or Subcontractor(s), or any agent or employee of either during the progress of the Work and until its final acceptance.

The Contractor shall protect property, public and/or private, encountered in this Work except as stipulated elsewhere herein. The Contractor shall be responsible and liable for any damage.

The Contractor shall protect its work and materials from damage or the elements, until the completion and acceptance of the Work. All loss or damages arising under the terms of these Contract Documents, or from any unforeseen obstruction or defects that may be encountered in the prosecution of the Work, or from the action of the elements, shall be sustained by the Contractor.

In an emergency affecting human health or safety, the Contractor shall act to prevent or mitigate the risk or threat. Any compensation claimed by the Contractor on account of emergency work shall be determined by agreement or as covered under the Section "Change Orders".

ADD the following subsection:

00150.77 Unforeseen Difficulties - The Contractor shall protect its work and materials from damage resulting from the nature of the work, the elements, carelessness of other contractors, or from any cause whatever until the completion and acceptance of the Work. All loss or damage arising out of the nature of the work to be done under these Contract Documents, or from any unseen obstruction or defects that may be encountered in the prosecution of the Work, or from the action of the elements, shall be sustained by the Contractor.

(Use the following subsection .91 on projects when a mandatory post-construction meeting is required.)

00150.91 Post-Construction Review – REPLACE this subsection, except for the subsection number and title, with the following:

The Contractor shall attend a Post-Construction Review meeting to be held by the City prior to issuance of Third Notification but not earlier than 15 Days following the date of

Second Notification. The time and place of this meeting will be announced by the Engineer at least 15 Days prior to the meeting date. The purpose of this meeting is to examine the Project for possible process improvements that may benefit future projects. The Contractor's attendance at the Post-Construction Review meeting is mandatory.

ADD the following subsection:

00150.98 Maintaining Traffic – The Contractor shall be responsible to maintain two-way traffic at all times unless otherwise allowed. The streets shall be open for two-way traffic at all times when the Contractor is not performing work unless otherwise allowed. Approaches to all properties accessing the project shall be maintained by the Contractor at all times except for short periods necessary for the progress of the construction.

ADD the following subsection:

00150.99 Public Safety and Convenience – The Contractor shall conduct the project with proper regard for the safety and convenience of the public. When the project involves use of public ways, the Contractor shall provide certified Flaggers when directed, a temporary traffic control plan approved by the Engineer, and shall install and maintain means of free access to all property.

Private residential driveways shall be closed only with approval of the Engineer or specific permission of the property owner. The Contractor shall not interfere with normal operation of public transit vehicles unless otherwise authorized. The Contractor shall not obstruct or interfere with travel over any public street or sidewalk without approval. Where detours are necessary, they shall be maintained with good surface and shall be clearly marked. The Contractor shall provide open trenches and excavations with adequate barricades of an approved type that can be seen from a reasonable distance. At night, the Contractor shall backfill all open work and mark areas with signs and lighted barricades (Type A Low Intensity Flashing Warning Light on a Type I or II barricade, typical) in accordance with the *Manual of Uniform Traffic Control Devices* (MUTCD). The Contractor shall install and maintain all necessary signs, lights, flares, barricades, railings, runways, stairs, bridges, and facilities. The Contractor shall observe all safety instructions received from the Engineer or governmental authorities, but following of instructions shall not relieve the Contractor from the responsibility or liability for accidents to workers or damage or injury to persons or property.

Emergency traffic such as police, fire, and disaster units shall be provided reasonable access to the work area at all times.

The Contractor shall be liable for any damages that may result from failure to provide reasonable access or failure to notify the appropriate authority.

Section 00160 – Source of Materials

Comply with Section 00160 of the General Conditions modified as follows:

00160.05 – Qualified Products List (QPL) – **REPLACE** OSS 00160.05 with the following:

Refer to the Special Provisions of the OSS General Conditions, section 165, Quality of Materials.

(Use the following subsection .30 when the City will furnish items or materials other than material from a borrow source; for example, poles, timbers, guardrail, etc. Give the location where the items/materials may be picked up. Delete the words in parenthesis and parentheses as needed. For aggregates and other similar materials, use 00160.40.)

00160.30 Agency-Furnished Material – The City will furnish the listed items at the (Project Site:) (following locations:)

(Use the following subsection .40 on projects for City-furnished material sources. Include SP235 when using this subsection.)

00160.40 Agency-Furnished Sources - **REPLACE** this subsection, except for the subsection number and title, with the following:

City-Furnished Sources for this Project are listed in Section 00235.

Section 00165 – Quality of Materials

Comply with Section 00165 of the General Conditions modified as follows:

00165.00 General – ADD the following after the paragraph that starts and ends with the sentence "Materials or manufactured . . . . otherwise directed by the Engineer:

All materials to be incorporated in the Work shall be subject to sampling, testing, and approval. Samples furnished by the Contractor shall be representative of the materials to be used. The Engineer may select samples or may require that samples be delivered to and tested as required by the Specifications at the laboratory of the Engineer, at no additional cost to the City.

- All sampling and testing of materials shall be done in accordance with the current designated standard methods of the American Association of State Highway and Transportation Officials (AASHTO), American Society for Testing and Materials (ASTM), etc., or in accordance with special methods designated in the Specifications.
- The Contractor shall furnish, without additional charges, the necessary test pieces and samples, including facilities and labor for obtaining the same, as requested by the Engineer. When required, the Contractor shall furnish test certificates of materials and equipment made at the point of manufacture by a recognized testing laboratory.
- The Engineer shall have access to the Work wherever it is in preparation or progress, and the Contractor shall provide facilities for the access, including maintenance of temporary and permanent access routes.
- If the Specifications, laws, ordinances, or public authority requires the Work to be tested or approved, the Contractor shall give the Engineer timely notice of its readiness for inspection. If the inspection is by authority other than the Engineer, the Engineer shall be given timely notice of the date fixed for the inspection. Inspections by the Engineer will be promptly made and, where practicable, at the source of supply. If work should be covered without approval or consent of the Engineer, it shall, if required by the Engineer, be uncovered for examination at the Contractor's expense.
- Re-examination of questioned work may be ordered by the Engineer and, if so ordered, the work shall be uncovered by the Contractor. If the work is found not in accordance with the Contract Documents, the Contractor shall correct the defective work at no additional cost to the City.
- Observations by Engineer, inspections, tests, or approvals by persons other than the Contractor shall not relieve the Contractor from the obligation to perform work in accordance with requirements of the Contract Documents.

Section 00170 – Legal Relations and Responsibilities

Comply with Section 00170 of the General Conditions modified as follows:

00170.01 Other Agencies Affecting Agency Contracts: ADD the following subsection:

(e) Railways – The Contractor shall comply with the Contractor railway requirements and agreement that are in effect for this Project.

(ADD the following option, if applicable.)

00170.06 Federal-Aid Participation – This Project is to be conducted according to the regulations applying to Federal-Aid Highway Projects.

00170.60 Safety, Health, and Sanitation Provisions – ADD the following paragraph below the paragraph that begins and ends ("The Contractor shall comply. . . hazardous, dangerous, or unsanitary."):

As required by law or administrative regulation, the necessary sanitary conveniences, properly secluded from public observation, shall be erected and maintained by the Contractor at all times while people are employed on the Work, and use of the sanitary conveniences shall be strictly enforced. The location of the conveniences shall be approved by the Engineer.

(Use one of the following options for subsection .65(b) on federally funded projects when the project is a Functional Classification of 08 rural minor collector, 09 rural local, or 19 urban local. Delete both options if they do not apply or, if one does apply, delete the option that does not apply.)

[Option 1 - Use these two subsection .65(b)s on federally funded projects when the project is a Functional Classification of 08 rural minor collector, 09 rural local, or 19 urban local.]

[BEGIN Option 1 subsection .65(b)]

00170.65(b) When Federal Funds Are Involved – REPLACE this subsection with the following subsection:

00170.65(b) When Local Road or Rural Minor Collector Federal Funds Are Involved – For this local road or rural minor collector Federal-Aid Project, the Contractor shall comply with 00170.65(c) and the provisions of Federal Highway Administration (FHWA) Form 1273, "Required Contract Provisions Federal-Aid Construction Contracts", except Sections IV and V do not apply.

[END Option 1 subsection .65(b)]

[Option 2 - Use this subsection .65(b) on federally funded projects when the project is a Functional Classification of 08 rural minor collector, 09 rural local, or 19 urban local.]

[BEGIN Option 2 subsection .65(b)]

00170.65(b) When Federal Funds Are Involved – REPLACE the paragraph that begins "For Federal-Aid projects…" with the following paragraph and bullets:

For American Recovery and Reconstruction Act of 2009 (ARRA) Federal-Aid funded projects, the Contractor shall comply with the following:

- The provision of FHWA Form 1273, "Required Contract Provisions Federal-Aid Construction Contracts", with the exception that the introductory paragraph of Sections IV and V, which states "*(Applicable to all Federal-aid construction contracts exceeding $2,000 and to all related subcontracts, except for projects located on roadways classified as local roads or rural minor collectors, which are exempt.)*" is replaced with the following introductory paragraph:

  (Applicable to all Federal-Aid construction contracts exceeding $2,000 and to all related subcontracts.)

- ORS 279C.520 (see (a) of this subsection) and ORS 279C.540

[END Option 2 subsection .65(b)]

(Use the following subsection .65(c) on rock production projects.)

[BEGIN subsection .65(c)]

00170.65(c) When No Federal Funds Are Involved – REPLACE this subsection, except for subsection number and title, with the following:

Wage rate and fringe benefit schedules are not required for the Project.

[END subsection .65(c)]

ADD the following subsection:

00170.66 Contractor's and Manufacturer's Compliance with State, OSHA, and Other Applicable Code Requirements – The completed Work shall include all necessary permanent safety devices such as machinery guards and similar ordinary safety items required by the state and federal Occupational Safety and Health Administration (OSHA) industrial authorities and applicable local and national codes.

Further, any features of the Work (including City selected equipment) subject to the safety regulations shall be fabricated, furnished, and installed in compliance with these requirements. Contractors and manufacturers of equipment shall be held responsible for compliance with the requirements included herein.

00170.70,(a) Insurance Coverages – ADD the following after the last sentence of this subsection that ends with . . . Automobile Liability with Pollution coverages:

The following insurance coverages and dollar amounts are required pursuant to this subsection:

Insurance Coverages	**Combined Single Limit per Occurrence**	**Annual Aggregate Limit**

(Fill in the blanks with the dollar amounts from the project risk assessment summary.)

Commercial General Liability $_____ $_____

Commercial Automobile Liability $_____ (aggregate limit not required)

(Include the following pollution liability item only when it is required by the risk assessment summary; otherwise, delete it.)

Pollution Liability $_____ $_____

(Include one or both of the following bullets only when they are required by the risk assessment summary. Delete them if they are not required.)

- With Asbestos Liability Endorsement or separate coverage
- With Lead Liability Endorsement or separate coverage

(Include the following commercial automobile liability with pollution liability item only when it is required by the risk assessment summary; otherwise, delete it.)

Commercial Automobile Liability with Pollution Coverage $_____ (aggregate limit not required)

00170.70(c) Additional Insured – ADD the following paragraph and bullets to the end of this subsection:

ADD the following as Additional Insureds under the Contract:

- The City and its officers, agents, and employees
- The Bend City Council

NOTE – MAY ADD ADDITIONAL INSUREDS, SUCH AS OUTSIDE ENGINEERING CONSULTANTS OR OWNER'S REPRESENTATIVES IN SOME CASES

00170.70(g) Builders' Risk – **ADD** the following to the end of this subsection:

Provide Builders' Risk insurance for an amount equal to at least $_____. The policy shall include as loss payee, the Agency and ____(County or City Owner of Building)____.

(REVISE OSS 00170.70 with the following material.)

h. No Personal Liability of Public Officials - In carrying out any of the provisions herein or exercising any authority granted by the Agreement, there would be no personal liability upon any public official.

00170.72 Indemnity/Hold Harmless – **ADD** the following paragraph and bullets to the end of this subsection

Extend indemnity and hold harmless to the Agency and the following:

- The City of Bend and its officers, agents, and employees
- The Bend City Council

NOTE – MAY ADD ADDITIONAL ENTITIES, SUCH AS OUTSIDE ENGINEERING CONSULTANTS OR OWNER'S REPRESENTATIVES IN SOME CASES

00170.85 Failure to Complete on Time: Liquidated Damages – ADD the following subsection:

(d) Remedies Cumulative.

Nothing in this Section 00170.85 precludes the City from asserting any other remedy or theory of recovery, including breach of contract and negligence for defects in the Work.

ADD the following subsection:

00170.95 Ownership of Drawings – All Plans, Drawings, Specifications and copies furnished by the City are the City's property and are not to be used on other work and, with the exception of the signed contract set, are to be returned on request at completion of the work. Any reuse of these materials without written authorization by the City will be at the risk of the user and without any liability or legal expense to the City. All models are the property of the City.

Section 00180 – Prosecution and Progress

Comply with Section 00180 of the General Conditions modified as follows:

00180.30 Materials, Equipment, and Work Force – ADD at the end of the paragraph that begins ("The work force shall . . ."):

The Contractor at all times shall enforce strict discipline and good order among its employees. The Contractor shall comply with all applicable labor rules, wage scales, and regulations, including nondiscriminatory laws, of the Government of the United States, the State, County, and City or Town in which the Work is performed.

(Use the following subsection .40(b) when limitations prevent all contractor work before a specified date. Fill in the specific date.)

00180.40(b) On-Site Work – ADD the following to the end of the subsection:

The Contractor shall not begin On-Site Work before ___(Date)____, unless approved by the Engineer.

(Use the following lead-in sentence and subsection .40(c) when limitations are included in the Special Provisions. Delete the limitations that do not apply.)

ADD the following subsection:

00180.40(c)

(c) Specific Limitations – Limitations of operations specified in these Special Provisions include, but are not limited to, the following:

Limitations	**Subsection**
Cooperation with Utilities	00150.50
Cooperation with Other Contractors	00150.55
Railway Work	00170.01(e)
Contract Completion Time	00180.50(h)
Right-of-Way and Access Delays	00180.65
Traffic Lane Restrictions	00220.40(e)
Special Events	00220.40(e)
In-water Work Restrictions	00290.34(a)
Noise Control	00290.32

(Use the following paragraph when limitations prevent contractor work within the limits of the project, before a specified date, or for a duration. Fill in the specific dates.)

Be aware of the schedule limitations in the Standard Specifications that are not listed in this subsection.

00180.41 Project Work Schedules - After the paragraph that begins "Contractor's activity…" ADD the following paragraphs:

The Contractor shall submit a supplemental "3 week look ahead" Project Work schedule each week to the Engineer. An exception to this provision may be given by the Engineer when projects are small or of a simple nature. The "look ahead" Project Work schedule is supplemental to the Type A, B, or C schedule specified below. The supplemental "look ahead" Project Work schedule shall:

- Identify the sequencing of activities and time required for prosecution of the Work
- Provide for orderly, timely, and efficient prosecution of the Work
- Contain sufficient detail to enable both the Contractor and the Engineer to plan, coordinate, analyze, document, and control their respective Contract responsibilities

The supplemental "3 week look ahead" Project Work schedule shall be written in common terminology and show the planned work activities broken down into logical, separate activities by area, stage, and size, and shall include the following information:

- The resources the Contractor, Subcontractors, or services will use
- The locations of each activity that will be done, including the limits of the Work by mile posts, stations, or other indicators
- The time frames of each activity by Calendar Days, shifts, and hours
- All anticipated shoulder, lane, and road closures

At a minimum, the Contractor shall prepare a bar chart that:

- Shows at least three weeks of activity including the week the bar chart is issued
- Uses a largest time scale unit of one Calendar Day. Smaller time scale units may be used if needed.
- Is appropriate to the activities
- Identifies each Calendar Day by month and day

Include the Contract name, Contract number, Contractor's name, and date of issue on each page of the bar chart.

The Contractor shall submit the supplemental "3 week look ahead" Project Work schedule starting at First Notification and continuing each week until Second Notification has been issued and all punch list items and final trimming and cleanup has been completed. The Contractor shall meet with the Engineer each week to review the supplemental "look ahead" Project Work schedule. If the Engineer or the Contractor determines that the current supplemental "look ahead" Project Work schedule requires changes or additions, either notations can be made on the current schedule or the

Engineer may require the submittal of a revised supplemental "look ahead" Project Work schedule. Review of the current and subsequent supplemental "look ahead" Project Work schedules does not relieve the Contractor of responsibility for timely and efficient execution of the Contract.

(Obtain the type of schedule ("A," "B", or "C") from the project Scheduler. Insert the type in the blank.)

In addition to the "3 week look ahead" Project Work schedule, a Type _____ schedule as detailed in the Standard Specifications is required on this Contract.

(Use the following subsections .41(b-2) and .41(b-3-a) when a Type "B" Schedule is required.)

[BEGIN .41(b-2) and .41(b-3-a)]

00180.41(b-2) Detailed Schedule – REPLACE the paragraph that begins "In addition to the above requirements…" with the following two paragraphs:

In addition to the above requirements, and within 30 Calendar Days after the Notice to Proceed, the Contractor shall provide the Engineer one digital copy and four paper copies of a detailed time-scaled bar chart Project Work schedule indicating the critical course of the Work. The digital copy shall be compatible with MS Project 2003, Primavera P3, SureTrak Project Manager 3.0, or another scheduling program approved by the Engineer.

Detailed work schedule activities shall including the following:

REPLACE the paragraph that begins "Within 10 Calendar Days…" with the following paragraph:

Within 10 Calendar Days after submission of the Project Work schedule, the Engineer and the Contractor shall meet to review the Project Work schedule as submitted. Within 10 Days of the review meeting the Contractor shall resubmit to the Engineer one digital and four paper copies of the Project Work schedule, including required revisions.

00180.41(b-3-a) Review with the Engineer - In the paragraph that begins "The Contractor shall evaluate…", REPLACE the sentence that begins "The Contractor shall submit…" with the following sentence:

The Contractor shall submit one digital and four paper copies of the updated bar chart to the Engineer within 7 Days after the progress meeting, along with a progress report as required by "b." below.

[END .41(b-2) and .41(b-3-a)]

00180.42 Preconstruction Conference – REPLACE OSS 00180.42 with the following:

Before work is started and materials ordered, the Contractor shall meet and consult with the Engineer relative to materials, equipment, and all arrangements for prosecuting the Work. The Contractor shall commence the Work contemplated under these Contract Documents within 3 days after the City's written notice to proceed unless otherwise notified by the Engineer, and shall complete the Work within the time specified in the Agreement, it being expressly understood and agreed that the time of beginning, rate of progress, and time of completion of the Work are of the essence of this Agreement.

Before meeting with the Engineer for the preconstruction conference, hold a group utilities scheduling meeting with representatives from the utility companies involved with this project. Incorporate the utility's time needs into the Contractor's schedule submitted at the preconstruction conference.

(Use one of the following four .50(h) subsection options, as appropriate. Fill in the blanks.)

(Option 1. When on-site work is to be controlled, use the following.)

00180.50(h) Contract Time – Complete all work to be done under the Contract before the elapse of ___ Calendar Days, or not later than _____, whichever occurs first.

Recording of the elapse of Calendar Days will begin on the day the Contractor begins On-Site Work as defined in 00110.20.

(Option 2. When seeding establishment or plant establishment is required, use the following. Delete what does not apply. Remove parentheses.)

00180.50(h) Contract Time – Complete all work to be done under the Contract, except for (seeding establishment) (and) plant establishment, not later than _____.

(Option 3. When there are two completion times, use the following.)

(If either durable pavement markings (00865) or high-performance pavement markings (00866) are required, and the completion date is after September 15, check with the Scheduler and request two completion times.)

(If permanent seeding (01030) or planting (01040) is required, and the completion date is outside the planting seasons (see 01030.43(b) or 01040.41

and .42), check with the Scheduler and request two completion times. Delete what does not apply. Remove parentheses.)

00180.50(h) Contract Time – There are two Contract Times on this Project as follows:

(1) Complete all work to be done under the Contract, except for _____, not later than _____.

ADD the following subsection:

(2) Complete all work to be done under the Contract, (except for (seeding establishment) (and) plant establishment), not later than _____.

(Option 4. When none of the three options above apply, use the following.)

00180.50(h) Contract Time – Complete all work to be done under the Contract not later than _____.

(Use the following subsection .65 when right-of-way access delays are necessary. Fill in the blanks with the appropriate information.)

00180.65 Right-of-Way and Access Delays – **ADD** the following paragraph:

It is anticipated that the ending date of an anticipated delay for the following properties will be as shown:

- File ___(R/W file number) (Stations right and left)____ not later than ___(Date)___.

ADD the following subsection:

00180.66 Delays and Extension of Time – If the Contractor shall be delayed at any time in the progress of the Work by any act or neglect of the City; or of any employee of the City; or by any separate contractor employed by the City; or by changes ordered in the Work; or by strikes, lockouts, fire, unavoidable casualties, or any cause beyond the Contractor's control that justified the delay, or by any delay authorized in writing by the Engineer; then the date for completion of the Work shall be extended. Within 14 days after the Contractor submits to the Engineer a written request for an extension of time, the Engineer will determine the number of days extension due to the Contractor. The City will make the final decision on all requests for extension of time.

No extension shall be made for delays occurring more than 7 days before claim is made in writing to the Engineer. In case of a continuing cause of delay, only one claim is necessary.

If no schedule or agreement stating the date upon which supplemental drawings shall be furnished by the Engineer is made, then no claim for delay shall be allowed the

Contractor on account of failure to furnish drawings until 2 weeks after demand for the drawings, and not then unless the claim be reasonable.

No extension of time will be granted to the Contractor for delays occurring to parts of the Work that have no measurable impact on the completion of the total Work under this Agreement.

No extension of time will be considered for weather conditions normal to the area in which the work is being performed. Unusual weather conditions, if determined by the Engineer to be of a severity that would stop all progress of the work, may be considered as cause for an extension of Agreement completion time.

Delays in delivery of equipment or material purchased by the Contractor or its Subcontractors (including City selected equipment) shall not be considered as a just cause for delay. The Contractor shall be fully responsible for the timely ordering, scheduling, expediting, delivery, and installation of all equipment and materials.

The contract time may only be changed by a Change Order.

00180.85(b) Failure to Complete on time; Liquidated Damages: REPLACE **(b)** with the following:

(b) It is agreed that the amount of additional expense and damage incurred by reason of failure to complete the Work shall be as given in the following schedule for each workday the work exceeds the number of workdays specified.

Original Contract Amount	Liquidated Damages
Up to $10,000	$500
$10,000 to $100,000	$1,000
$100,000 to $500,000	$1,500
Greater than $500,000	$2,000

These amounts are agreed upon as liquidated damages for the loss to the City on account of expense due to the employment of Engineers, Inspectors, and other employees after the expiration of the time of completion, and on account of the value of the operation of the Work dependent thereon. It is expressly understood and agreed that this amount is not to be considered in the nature of a penalty, but as liquidated damages that have accrued against the Contractor; and the City is authorized to deduct the amount of the damages from any monies due the Contractor for work performed or material furnished under this Agreement; and the Contractor and its Sureties shall be liable for any excess.

(Note: The minimum liquidated damages will be all of the City's incurred costs for administration and inspection beyond the approved completion date.)

Section 00190 – Measurement of Pay Quantities

(Use the following paragraph when 00190.20(f-2) and 20(g) are NOT included in the project.)

Comply with Section 00190 of the General Conditions as modified in this section.

(Use the following lead-in paragraph when 00190.20(f-2) and 20(g) are included in the project.)

Comply with Section 00190 of the General Conditions modified as follows:

(Use the following subsections .20(f-2) and .20(g) when materials are to be weighed to determine pay quantities.)

00190.20(f)(2) Scale Without Automatic Printer – ADD the following sentence after the first paragraph:

Pay costs for the weigh witness at $35.00 per hour.

00190.20(g) Agency-Provided Weigh Technician – ADD the following paragraph after the bullet list:

Pay costs for the weigh technician at $35.00 per hour.

MODIFICATIONS APPLICABLE IN ALL CASES

DELETE sections 00195.10, 00195.12 and 00195.80.

Section 00195 – Payment

Comply with Section 00195 of the General Conditions modified as follows:

00195.10 Payment for Changes in Materials Costs – ADD the following:

No material price escalation/de-escalation is allowed on City projects unless specifically identified and defined in the Contract. All OSS clauses relating to this matter are not applicable on City projects.

00195.20(a) Insignificant Changed Work – DELETE and REPLACE subsection with the following:

(a) Change Orders - Payment or credit for any alterations covered by a Change Order shall be determined by one or a combination of methods below.

- **Unit Prices -** If applicable, the unit prices stated in the Proposal or unit prices negotiated and mutually acceptable to the Contractor and City.
- **Lump Sum -** A total sum for the Work negotiated and mutually acceptable to the Contractor and City.

The Contractor's quotations for Change Orders shall be in writing and firm for a period of 45 days. Any compensation agreed upon, and subsequently paid by the City for work defined in a Change Order, shall be deemed to include all costs and expenses related to the work, including the costs and expenses to a direct, indirect, and consequential nature, or otherwise, and it is specifically understood and agreed that no additional compensation may be subsequently sought or charged by the Contractor for the work covered by the applicable Change Order.

The City's request for quotations on alterations to the work shall not be considered authorization to proceed with the work prior to the issuance of a formal Change Order, nor shall the request justify any delay in existing work.

00195.80 Allowance for Materials Left on Hand: DELETE and REPLACE section with the following:

00195.80 Materials delivered to the work site but not used.

Final payment will be made only for materials actually incorporated in the work. Upon acceptance of the work, all materials stored on the site, unless otherwise agreed upon in writing, shall revert to the Contractor.

ADD the following subsection:

00195.89 Release of Liens – Except for payments to Subcontractors, neither the final payment nor any part of the retained percentage shall become due until the Contractor submits to the City a signed affidavit, satisfactory to the City, stating that so far as the Contractor has knowledge or information, all accounts for materials, labor, and incidentals in connection with the Work have been paid in full.

00195.90 Final Payment – DELETE and REPLACE with the following subsection:

To receive final payment, the Contractor must do the following:

(1) Notify the Engineer, in writing, that the Work has been completed in accordance with the Contract Documents, and request final payment.

(2) Submit to the City appropriate waivers of lien for itself and all Subcontractors.

(3) Furnish to the City a completed wage certification as required by ORS 279, as amended.

Within 15 days of these documents, the Engineer shall conduct a final inspection of the Work. If the Work, including all required inspection by City and other government agencies, and documentation has been completed to the satisfaction of the Engineer, the City shall accept the Work and make final payment to Contractor within 30 days of the final inspection.

ADD the following Subsection:

00195.92 Acceptance of Final Payment Constitutes Release – The acceptance by the Contractor of the final payment shall release the City and the Engineer as agent of the City from all claims and all liability to the Contractor for all things done or furnished in connection with the Work, and every act of the City and others relating to or arising out of the Work. No payment, however, final or otherwise, shall operate to release the Contractor from obligations under these Contract Documents, including obligations to repair or compensate City for work later determined to be defective.

ADD the following subsection:

00195.93 No Waiver of Rights – Neither the inspection by the City, through the Engineer or any of its employees, nor any payment for or acceptance of any part of the Work by the City Engineer, nor any extension of time, nor any possession taken by the City , shall operate as a waiver of any provision of these Contract Documents, or any power reserved to the City, or any right to damages. A waiver of any breach of this Agreement is not a waiver of any other or subsequent breach.

Section 00199 – Disagreements, Protests and Claims

Comply with Section 00199 of the General Conditions modified as follows:

ADD the following subsection:

00199.01 Inconsistencies and Omissions – Any inconsistency, error or omission found in the Contract Documents shall be reported to the City in writing immediately and before proceeding with the work affected by the inconsistency, error or omission. Contractor shall not be liable to City for failure to discover any inconsistency, error or omission. City will clarify inconsistencies, errors or omissions in writing within a reasonable time. The City's decision shall be final. Inconsistencies shall be resolved according to the priority stated in the Agreement.

00199.40(b) Step 1: Region Level Review – REPLACE title with the following:

Step 1: Engineer Appeal

SUBSTITUTE Engineer for "Region-level review" throughout Step 1:

00199.40(c) Step 2: Agency Level Review – REPLACE title with the following:

Step 2: City Public Works Director Appeal

SUBSTITUTE Public Works Director for "Contract Administration Engineer" throughout Step 2.

00199.40(d) Step 3: Arbitration; Claims Review Board – DELETE in its entirety and REPLACE with the following:

At this step, the parties agree to submit the dispute to non-binding arbitration before an arbitrator selected by mutual agreement of the parties. If the parties are unable to agree to an arbitrator, they shall ask the Presiding Judge of the Circuit Court of the State of Oregon for Deschutes County to appoint an arbitrator.

ADD the following subsection:

00199.60 Remedies Cumulative – The remedies provided for in the contract documents are cumulative, and in addition to other remedies available at law. Contractor agrees that, due to the health, safety and welfare issues that relate to timely and acceptable completion of the facilities to be constructed under this contract, the City may not have an adequate remedy at law in the event of a breach of this contract by Contractor, and that the City may obtain injunctive relief at the sole election of the City.

END OF SECTION

PART II

City of Bend Design Standards

Part II – Design Standards

Table of Contents

1.0 Use of These Design Standards 2
1.1 Authority 2
1.2 Deviations, Waivers, or Modifications 2
1.3 References to Other Standards 3
1.4 Compliance with Americans with Disabilities Act 3
1.5 Roadside Safety 3
1.6 Airport Design 4
2.0 Design Submittal Requirements 3
2.1 Initial Plan Submittal 4
2.2 Survey Plat 4
2.3 Information Required on Plans 5
2.3.1 Streets – Plan and Profile Views 5
2.3.2 Sewer – Plan and Profile Views 7
2.3.3 Water – Plan and Profile Views 7
2.3.4 Stormwater – Plan and Profile Views 8
2.3.5 Landscaping and Irrigation Plans 8
2.3.6 Signing and Striping 9
2.3.7 Grading and Erosion Control 9
2.3.8 Calculations 10
2.4 CAD Drafting Standards 10
2.4.1 National CAD Standards 10
2.4.2 Drawing Creation and Layout 11
2.4.3 Electronic Drawing Format 15
2.4.4 Drawing File Name 15
2.4.5 Units 16
2.4.6 Scale 16
2.4.7 GIS Interface 17
2.4.8 Line Types, Weights, and Colors 17
2.4.9 Sheet Layout 18
2.4.10 Model Space and Paper Space 19

2.4.11 Drawing Orientation 19
2.4.12 Standard Details 19
2.4.13 Special Details 19
2.4.14 Terms and Abbreviations 20
2.4.15 External Reference (Xref) 20
2.4.16 Professional Stamps 20
2.4.17 Plot Styles 20
2.4.18 Drawing Submittal 20
2.4.19 City Standard Template 21
2.5 Final Plan Submittal 21
2.6 As-Built Plan Submittal 22
2.7 Notice to Proceed 22
2.8 Right of Way Permit Expiration 23

3.0 Streets 3
3.1 References 3
3.2 Deviation from Streets Standards 3
3.3 Design Considerations 4
3.3.1 Traffic Studies 4
3.3.2 Intersection Controls 5
3.3.3 Design Speed 5
3.3.4 Sight Distance 6
3.4 Roadway Design Elements 8
3.4.1 Right-of-way 8
3.4.2 Paved Roadway Widths and Lane Widths 8
3.4.3 Roundabout Design 12
3.4.4 Traffic Signal Design 13
3.4.5 Medians 13
3.4.6 Islands 14
3.5 Roadway Geometry 14
3.5.1 Intersections 14
3.5.2 Horizontal Alignment 16
3.5.3 Vertical Alignment 18
3.6 Other Right of Way Design Elements 20
3.6.1 Sidewalk 20
3.6.2 Curb Ramps and Crosswalks 21

3.6.3 Transit Facilities 25
3.6.4 Driveways 27
3.6.5 Signing 28
3.6.6 Pavement Marking/Striping 30
3.6.7 Curb Painting 31
3.6.8 Mailboxes 31
3.6.9 Illumination 32
3.6.10 Drainage 33
3.6.11 On-Street Parking 33
3.6.12 Traffic Calming Devices 33
3.7 Temporary Traffic Control 33
3.8 Pavement Restoration Requirements 35
3.8.1 Grades 35
3.8.2 Permits 36
3.8.3 Responsible Party 37
3.8.4 General Requirements 37
3.8.5 Pavement Sections 37
3.8.6 Full, Modified, and T-Cut Patching Standards 37
3.8.7 Traffic Control 38
3.8.8 Pavement Cut Restriction (Exception Process) 39
3.8.9 Permits for Non Street Cut Restriction Streets and Street Cut Restriction Streets with Approved Exception 40
3.8.10 Special requirements for Concrete Roads 40
3.8.11 New Development 41
3.8.12 Temporary Pavement Restoration 41
3.8.13 Testing and Warranty Requirements 41
3.8.14 No Dig/Trenchless Technology 42

4.0 Sanitary Sewer Systems 3
4.1 Sewer Main 4
4.1.1 Depth 5
4.1.2 Minimum Diameter 5
4.1.3 Flow Calculation 5
4.1.4 Peak Factor (Domestic Flows Only) 7
4.1.5 Line Diameter and Velocity 7
4.1.6 Minimum Grade (Gravity) 7
4.1.7 Inverted Siphons 8

4.1.8 Flows in Pressure Sewers 8
4.1.9 Minimum Velocity 8
4.1.10 Maximum Velocity 8
4.1.11 Pressure Sewer Appurtenances 8
4.1.12 Waterline Crossings 8
4.1.13 Marking Tape and Locate Wire 9
4.1.14 Materials 9
4.1.15 Construction 10
4.1.16 Septic System and Municipal Sewer Extensions 10
4.1.17 Sewer System Extension Requirements 10
4.2 Manholes (Gravity) 11
4.2.1 Manhole Placement 12
4.2.2 Manholes (Pressure to Gravity Sewer) 12
4.2.3 Pressure Sewer Manholes 12
4.3 Sewer Services 12
4.3.1 Cleanouts 13
4.3.2 Sample Manhole 13
4.3.3 Sample Manholes on Pressure Sewer Systems 14
4.4 Sewage Pump Station Design 14
4.4.1 Wetwells 15
4.4.2 Pumps 17
4.4.3 Reliability and Redundancy 18
4.4.4 Telemetry and SCADA 18
4.4.5 Pump Control Panels 19
4.4.6 Electrical Enclosure 19
4.4.7 Hydrogen Sulfide Protection 21
4.4.8 Station Access 21
4.4.9 Station Fencing 21
4.4.10 Force Main Cleanout 22
4.4.11 Flow Metering 22
4.4.12 Bypass System 22
4.4.13 Safety Systems 22
4.4.14 Lift Station Standards 22

5.0 Water 2
5.1 Main Line 2

5.1.1 Minimum Size 2
5.1.2 Marking Tape 2
5.1.3 Materials 3
5.1.4 Location 3
5.1.5 Velocities 3
5.1.6 Pressures and Flow Calculations 4
5.1.7 Bends and Joint Deflection 4
5.1.8 Thrust and Restrained Joints 5
5.1.9 Pressure Reducing Vaults 5
5.2 Service Lines 5
5.2.1 Services Off of Fire Lines 6
5.3 Valves 7
5.3.1 Valve Location 7
5.3.2 Valve Types 7
5.3.3 Pressure Reducing Valves 7
5.3.4 Blow-Offs 7
5.4 All-Weather Access 8
5.5 Meters 8
5.5.1 Automatic Meter Reading Systems 8
5.5.2 Standard Meters 9
5.5.3 Vaults and Meter Boxes, Including Insulation 9
5.6 Fire Services, Flows and Hydrants 9
5.6.1 Fire Flow Requirements 10
5.6.2 Fire Service Lines 11
5.6.3 Hydrants General 11
5.6.4 Location 11
5.6.5 Concrete Pad 12

6.0 Stormwater 2
6.1 Design Storm 2
6.1.1 Water Quality Design Storm 2
6.1.2 Water Quality Design Volume 2
6.1.3 Water Quality Design Flow 2
6.1.4 Flow Control and Conveyance 3
6.2 Hydrologic Basis of Design 3
6.2.1 Hydrologic Design Criteria 3

6.2.2 Drainage facility testing 4
6.3 Water Quality Treatment 8
6.3.1 Treatment Controls 8
6.4 Conveyance 10
6.4.1 Pipe Material 11
6.4.2 Pipe Diameter and Length 11
6.4.3 Placement and Alignment 11
6.4.4 Outfalls 11
6.4.5 Storm Drain Debris and Safety 11
6.5 Flow Control 11
6.5.1 Sequential Implementation 12
6.5.2 Fencing 12
6.5.3 Embankments 12
6.5.4 Access 13
6.6 Drainage Submittals 13
6.6.1 Concept Drainage Report 14
6.6.2 Concept Drainage Report Applicability 14
6.6.3 Road and Drainage Plans 14
6.6.4 Minimum Plan Elements 15

7.0 Grading and Erosion Control 2
7.1 Erosion Control 2
7.1.1 Erosion Control Plans 2
7.1.2 Erosion Control Maintenance 3
7.1.3 Erosion Control Slope Mitigation 4

8.0 Franchise Utilities 2
8.1 Franchise Utilities in Public Rights-of-way 2
8.1.1 General 2
8.2 New Construction and Conduit Banks 2
8.3 Shared Trenches 2
8.4 Trenching and Patching in Paved Right-of-way Areas 3
8.5 Small Wireless Facilities 3
8.5.1 Deviation from Small Wireless Facility Standards 3
8.5.2 Co-Location 4

8.5.3 Location Guidelines 4
8.5.4 Franchise Fees, License Fees and Permit Fees 5

9.1 Canal and Irrigation Laterals 1
9.2 Design 1
9.3 Materials 1
9.4 Testing 1
9.5 Easements 1

10.0 Surveying 2
10.1 Datum Requirements 2
10.1.1 Horizontal Datum 2
10.1.2 Vertical Datum 2
10.2 Aerial Photography and Photogrammetry 2
10.2.1 Photo Targets 2
10.2.2 Supplemental Ground Surveying 2
10.2.3 Confidence Points 2
10.3 Requirements for a Licensed Surveyor 3
10.4 Use of Benchmarks 3
10.5 Survey Data Required on Plans 3
10.6 Construction Phase Surveying 4
10.6.1 Supplemental Control 4
10.6.2 Construction Staking 4
10.6.3 Cutsheets 5
10.7 Final Submittal of Electronic Files 5
10.7.1 CAD Files 5
10.7.2 Word Processing Documents 5
10.7.3 Image Files 5

11.0 Geotechnical Engineering 2
11.1 Geotechnical Data Report 2
11.2 Geotechnical Recommendations Report 3
11.3 Pipelines, Appurtenances, and Ancillary Structures 3
11.3.1 Excavation 3
11.3.2 Thrust Restraint 3

11.3.3 Drywells 4
11.3.4 Seismic Design 4
11.3.5 Ancillary Structures 4
11.4 Pavement Design 4
11.4.1 Traffic Analysis 4
11.4.2 Subgrade Properties 5
11.4.3 Inputs for 1993 AASHTO Pavement Design Procedure 5
11.4.4 Minimum Design Life, and Life-cycle Cost Analysis 6
11.4.5 Minimum AC Thickness 6
11.4.6 Minimum PCC Thickness and Joint Design 6
11.5 Sign, Luminaire, and Signal Pole Foundations in the Public Right of Way 6
11.6 Other Transportation Design Elements 6
11.7 Blasting 7
11.8 References 7
11.8.1 Utility Systems; Pipelines, Appurtenances, and Ancillary Structures 7
11.8.2 Transportation Structural Elements; Pavements, Bridges, Culverts, Embankments, Retaining Walls, and Cut Slopes 7

12.0 Landscape Architecture and Irrigation Systems 1
12.1 Applicability 1
12.2 Landscape Plan Submittals 1
12.2.1 Design Parameters 2
12.2.2 Landscape Conservation 2
12.2.3 Street Trees and Plants 4
12.2.4 Standard Materials and Equipment 6
12.3 Irrigation Plan Submittals 7
12.3.1 Design Parameters 7
12.3.2 Drip Irrigation Design 8
12.3.3 Standard Materials and Equipment 8

13.0 Electrical Systems 3
13.1 Applicable Codes, Standards, and Regulations 3
13.2 Hazardous and Corrosive Areas 4
13.3 Design Approach and Guidelines 4
13.3.1 Distribution System 4

13.3.2 Standby Power 5
13.3.3 Fire Alarm 5
13.3.4 Security System and Facility Access Control 5
13.4 Design Presentation 5
13.4.1 Legend 5
13.4.2 Site Plan 5
13.4.3 Process and Facility 6
13.4.4 Single-Line Diagrams 6
13.4.5 Motor Control Schematic Diagrams 6
13.5 Schedules 7
13.5.1 Details 8
13.5.2 Specifications 8
13.6 Design Criteria 8
13.6.1 Listed and Labeled Equipment 8
13.6.2 Calculations 8
13.6.3 Distribution Voltage 8
13.6.4 Utilization Voltage 9
13.6.5 Voltage Drop 9
13.6.6 Demand Factors 9
13.6.7 Metering 9
13.6.8 Branch Circuits 9
13.6.9 Panelboards 10
13.6.10 Motor Control 10
13.6.11 Equipment Identification 11
13.6.12 Raceways 11
13.6.13 Wire and Cable 12
13.6.14 Color Coding 12
13.6.15 Circuit Identification 13
13.6.16 Enclosures 13
13.6.17 Fiber-optic Cable 13
13.6.18 Grounding 13
13.6.19 Lighting 13
13.6.20 Street Lighting 14

14.0 Instrumentation and Control Systems 2
14.1 Scope 2

14.2 Design Deliverables 2
14.2.1 Legend 2
14.2.2 Process and Instrumentation Diagrams 2
14.2.3 Process Control Functional Narratives 3
14.2.4 PLC I/O List 4
14.2.5 Control System Block Diagram 4
14.2.6 Sample Loop Drawings 5
14.2.7 Instrument List 5
14.3 Design Criteria 5
14.3.1 Enclosures 5
14.3.2 PLC I/O Special Requirements 6
14.3.3 Typical PLC I/O at Remote Station Facilities 6
14.3.4 Tag Numbering 7
14.3.5 Network Communication 7
14.3.6 Radio Pathway Study 8
14.3.7 Instruments and Components 8
14.3.8 Testing Requirements 8

SECTION 2-1

General Information

Table of Contents

1.0 Use of These Design Standards 2

1.1 Authority 2

1.2 Deviations, Waivers, or Modifications 2

1.3 References to Other Standards 3

1.4 Compliance with Americans with Disabilities Act 3

1.5 Roadside Safety 3

1.6 Airport Design 4

1.0 Use of These Design Standards

These Design Standards provide required design constraints, methodologies, features, and practices that shall be implemented in all designs of Public Works facilities in the City of Bend. If, in practice, a designer encounters a design feature for which a Design Standard does not exist, the responsible designer shall use best professional judgment for completing the design. The City Engineer retains the right to establish requirements for design of public works features for which a Design Standard does not exist and the designer shall modify designs to reflect all requirements of the City Engineer. To avoid re-work, the responsible designer should seek approval from the City Engineer, early in the design process when it becomes apparent to the responsible designer that a project requires design of features for which a Design Standard does not exist.

These Design Standards provide some guidance regarding permitting that may be required for some projects, but this document is not intended to identify the permitting requirements. The City of Bend Community Development Department and other agencies should be consulted for permits that will be required for projects. Prior to design, the designer should consider proximity to all private utilities, canals, or railways that may exist and understand their permitting and approval requirements. Their requirements are likely different than these design standards but could impact overall design and layout of public infrastructure.

These design standards are intended to complement the City of Bend's standard construction specifications, which are based on the Oregon Standard Specifications for construction as supplemented and/or modified by the City of Bend Special Provisions.

1.1 Authority

These Public Works Design Standards have been adopted by the City Council and minor amendments may be made by the City Engineer. Bend Development Code Chapter 3 also contains applicable land use design standards.

Throughout these design standards references are made to City Engineer approval. The City Engineer has the authority to delegate this approval, with the exception being to deviations, waivers, or modifications. Users are encouraged to work through the permit center at CDD to seek the lowest level of approval needed to prevent bottlenecks and time delays. City staff at the permit center will seek additional approval or input as needed. Users are discouraged from contacting various divisions, and division staff for additional information. Doing so will likely slow approval and provide misinformation.

1.2 Deviations, Waivers, or Modifications

Any deviations, waivers, or modifications from the City design standards must comply with the process identified in Part I, Section 2 Change Process. The City Engineer will make a final determination on the request.

1.3 References to Other Standards

The City of Bend intends to align its public works design and construction practices with public works industry standards. The Bend Design Standards and Construction Specifications refer to the latest version of various third party standards that contain design or construction elements required for compliance with the Bend Design Standards and Construction Specifications. Where third party standards are referenced, the responsible designer shall obtain copies of these public domain and/or copyrighted standards as required to understand and prepare designs in compliance with these standards. In no case shall the City of Bend be responsible for providing access to, or copies of, any referenced standard to a Consultant, Contractor, Developer, legal counsel or other party unless this standard is a unique standard published by the City of Bend.

1.4 Compliance with Americans with Disabilities Act

Design engineers are responsible for implementing appropriate sections of the latest versions of the “Americans with Disabilities Act Accessibility Guidelines (ADAAG)” for private property and buildings and the “Public Rights-of-Way Accessibility Guidelines (PROWAG)" for public rights-of-ways and private rights-of-ways with public access easements. Both documents are published by the United States Access Board to ensure access compliance for people with disabilities to buildings, properties and roadway facilities. The engineer should recognize that field conditions vary greatly and must be thoroughly investigated to ensure applicable criteria are met or exceeded. In addition, the City of Bend has specific design standards that supplement and work as a companion to the ADAAG and PROWAG requirements. The design engineer must also ensure these City standards are met.

Every attempt has been made to provide files in accessible formats. If you need to request an alternative version of a file posted on this site, please contact us (hyperlink) and provide as much information as you can about the document, its location, and your specific needs.

1.5 Roadside Safety

Roadside is defined as the area between the edge of the traveled way and the right-of-way. Roadside crashes account for 30 percent of the total fatal crashes nationally. The roadside environment plays a significant role in the injury or fatality outcome of leave the road events.

There are numerous reasons that can cause a driver to leave the road, from crash avoidance, to driver distraction. Regardless of the reason for a vehicle leaving the roadway, a roadside environment free of fixed objects with stable, flattened slopes reduces crash severity. These standards and specifications strive to reduce the likelihood of vehicles leaving the pavement; to create designs that do not include obstacles; and to reduce the impact severity by using an appropriate breakaway device. Within this document, the term 'obstacles' covers a variety of right-of-way design elements. The engineer is responsible for designing facilities; structures, signage, and landscape that ensure applicable criteria are met or exceeded.

1.6 Airport Design

The City of Bend owns, operates, and maintains the City of Bend Airport. This facility is designed to the Federal Aviation Administration's (FAA) requirements. Nothing in these design standards is intended to supersede or replace the FAA requirements. Where the FAA is silent, or has no design requirements, the City of Bend Design Standards shall be used.

SECTION 2-2

Design Submittal Requirements

Table of Contents

2.0 Design Submittal Requirements 3
2.1 Initial Plan Submittal 4
2.2 Survey Plat 4
2.3 Information Required on Plans 5
2.3.1 Streets – Plan and Profile Views 5
2.3.2 Sewer – Plan and Profile Views 7
2.3.3 Water – Plan and Profile Views 7
2.3.4 Stormwater – Plan and Profile Views 8
2.3.5 Landscaping and Irrigation Plans 8
2.3.6 Signing and Striping 9
2.3.7 Grading and Erosion Control 9
2.3.8 Calculations 10
2.4 CAD Drafting Standards 10
2.4.1 National CAD Standards 10
2.4.2 Drawing Creation and Layout 11
2.4.3 Electronic Drawing Format 15
2.4.4 Drawing File Name 15
2.4.5 Units 16
2.4.6 Scale 16
2.4.7 GIS Interface 17
2.4.8 Line Types, Weights, and Colors 17
2.4.9 Sheet Layout 17
2.4.10 Model Space and Paper Space 19
2.4.11 Drawing Orientation 19
2.4.12 Standard Details 19
2.4.13 Special Details 19
2.4.14 Terms and Abbreviations 20
2.4.15 External Reference (Xref) 20
2.4.16 Professional Stamps 20
2.4.17 Plot Styles 20
2.4.18 Drawing Submittal 20
2.4.19 City Standard Template 21

2.5 Final Plan Submittal 21
2.6 As-Built Plan Submittal 21
2.7 Notice to Proceed 22
2.8 Right of Way Permit Expiration 23

2.0 Design Submittal Requirements

The purpose of this section is to clearly identify the requirements for design submittal of proposed plans for approval by the City. In Part I, Section 3 is a table that is provided to help explain all the phases of land development. This table is not intended to identify every aspect, but rather to give the designer an idea of what will be required to submit to the City for approval for each phase of the development. It also identifies what the City is required to do for each of those phases of submittal. For construction plans to be reviewed, this table identifies the required phases of approval needed prior to construction plan submittal. For construction plans to be reviewed the applicant must have all site plan and land use planning approval. It is highly recommended that the designer review the land use decision that is tied to the property they are designing for regarding public facilities. Often times the land use decision has specific requirements of sizing, placement, or other requirements that must be satisfied. The design of those requirements relies on this document. The designer is responsible for ensuring all required elements that are contained in a land use decision are shown on plan submittals.

The requirements for site plan submittal are identified within the Bend Development Code. The Bend Code specifies what is required to be shown on any site plan submitted, which typically has significantly less detail than construction plans. The site plan review process is similar to construction plans, however the comments provided by the City are only to the level of detail that was provided on the plans and required by the City Development Code. Construction plans typically have far more detail and therefore City comments will also be more detailed during the construction plan review.

Plans and specifications for construction of any City utility that includes water, sewer, stormwater, streets (including alleys) and any other city infrastructure must be submitted to the City Engineer, or designee, for approval prior to construction.

Applicants shall submit complete electronic sets of plans and technical specifications for review by the City Engineer, or designee. A complete set of plans will show all the required elements as identified in this section. All plans must meet the City of Bend CAD Drafting Standards, which are outlined later in this section. Submittals shall include a copy of the Administrative Review and Decision and be accompanied by a transmittal letter with all pertinent materials attached, including a copy of the approved site plan. All designs shall conform to the current City of Bend Standards and Specifications.

Any project work on the proposed site conducted prior to approval of plans by the City Engineer and/or prior to Notice to Proceed by the City of Bend is not allowed. All grading and clearing shall be subject to the provisions of the most recently adopted City of Bend Grading and Clearing Ordinance located in the Bend City Code Chapter 7. In addition, Part II, Section 2-7 of these design standards contains specific requirements to address grading and drainage. A complete plan for erosion control and grading must be submitted for approval. Only those grading activities approved on the tentative site plan or plat under the applicability standards of the ordinance are allowed to be conducted prior to the approval of the engineered plan set.

An AutoCAD format template drawing for use by designers is available from the City of Bend Permit Counter. The drawing contains the City's required layer naming convention, standard blocks and symbols, and other information related to drafting standards.

Designers are required to use the template for all City infrastructures. Additional information regarding the use of the template drawing is identified below within the CAD Drafting Standards.

2.1 Initial Plan Submittal

Depending on the size and complexity of the project, the City Engineer or designee shall require that construction plans be submitted at different phases of design. This requirement will expedite review and approval overall and prevent major changes being required by the City late in the design process that can be both costly and timely. As an example of things that may require early design review could be but are not limited to: an entire development that has multiple streets with all related infrastructure, a street connecting to an arterial, pressure sewer system, large stormwater elements, connecting water mains of various sizes, multiple sewer laterals, or complex ADA access. The designer must check with the City Engineer or designee to determine if early design submittals will be required. All City capital improvement projects or projects that are identified as part of a master plan will require 30, 60, and 95 percent construction plan submittals prior to final sign off. At each review detailed comments will be provided and recorded by City staff using the City of Bend Project Managers Manual for design review. All comments will be provided to the designer and each comment must be addressed at submittal phase.

Construction documents for projects involving land use actions must be complete prior to submittal. Plans will be reviewed in a timely manner through an internal process that ensures a complete and consistent review by all affected departments. The plans shall be returned electronically with required modifications clearly noted and identified thereon. Comments will be consistent with the requirements specified in this document and City of Bend Development Code. All comments need to be satisfied and include written responses to all comments prior to final approval.

In addition to the plan submittal, any technical specifications that are appropriate for any portion of the project must also be submitted with the plans. These include pumps, motors, controllers, communication/telemetry systems, special valves, or other items that will ultimately need to be owned and operated by the City.

2.2 Survey Plat

When a plat is necessary to create a land division either as a subdivision or partition, a preliminary plat showing complete information shall be submitted to the project Planner or designee for review and comments. The plat must be signed by all required parties and recorded with the Deschutes County Recorder prior to the City's final acceptance of any public facilities. When the review comments have been addressed, and the County Surveyor has approved the plat, as indicated by signature on the mylar, the plat shall be submitted through the Permit Center to the project Planner, or designee, for signature. The required public facilities must be complete and accepted by the City and infrastructure as-builts submitted (section 2.6) prior to receiving signatures from the Planning Manager or the City Engineer.

2.3 Information Required on Plans

In addition to specific information required in Part 2 Section 2.4 below, the following shall also be included on all plans:

- Identify the location of all public and private utilities, both existing and proposed
- Street names including area quadrant (i.e. N.E., N.W., S.E., or S.W.)
- Special details for items not shown on Standard Drawings
- All relevant public facility data, including size and quantity of improvements
- Fire flow requirements as per City of Bend Fire Marshal
- Show existing and proposed ROW, property lines, survey monuments and label assessor's parcel numbers
- Refer to Part II, Section 2-10 (10.5) for Survey Data Required on Plans
- Any existing or proposed easements

2.3.1 Streets – Plan and Profile Views

- Vertical and horizontal curve data
- Roadway centerline and stationing along centerline to a minimum of 300 feet beyond proposed project limits.
- Slopes of centerline, sidewalks, and gutter lines, and running slope of roadway
- Continuous stopping sight distance along roadway
- Intersection sight distance and decision sight distance at intersections
- Radii and grades at the ends, midpoint, and 1/4 points of curb returns
- Typical cross-section location of streetlights at intersections
- Sight distance measurements and protections
- Pedestrian treatments including adequate information for ADA compliance checks including a detailed grading plan
- Spot elevations sufficient to demonstrate accessible ramps at all sidewalk intersections
- Counter slope of roadway at ramp
- Slope, utility and other existing and proposed easements
- Clear vision area at intersections
- Grade of all sidewalks shall be shown on the profile

Conceptual locations of driveway approaches

2.3.1.1 Streets - Roundabouts

In addition to specific information required in Section 2.3.1 above, the following shall also be included on all plans when applicable.

- Roundabout inscribed circular diameter labeled

- Approach and Exit alignment and design shown for each leg (include stationing and profiles)
- Centerline stationing and profiles for circulatory roadway
- Speed checks (in design report is ok)
- Design vehicle identified (in design report is ok)
- Turning movement analysis for design vehicle (in design report is ok)
- Vehicle path alignments and path overlap checks (in design report is ok)
- Bicycle treatments including ramp details
- Splitter island details and curb types, elevations
- Approach and circulatory roadway widths
- Truck apron design details including reveal curb and interior curb details
- Cross-slopes labeled and identified for all roadways including truck apron
- Illumination including pole type and location, wattage, fixture type, horizontal and vertical luminance and uniformity
- Pavement markings and striping
- Signing
- Sight distance measurements and protections
- Grading, drainage, landscaping

2.3.1.2 Streets - Traffic Signals

In addition to specific information required in section 2.3.1 above, the following shall also be included on all plans when applicable.

- Provide traffic signal removal plan
- Show location, direction, size and type of MUTCD number of all permanent street signing
- Show location, wiring, and mast arm for intersection street lighting
- Provide traffic and pedestrian signal design showing relationships between signal head placement and lane striping, lines of sight, and pedestrian movements
- Show signal poles, pedestrian poles, and controller cabinet foundation locations with relationship to sidewalks and rights-of-way.
- Provide conduit design and location
- Include wiring diagram
- Include phasing and timing diagram
- Include detection plan. For loop detectors, show wiring diagram and layout plan. For video detection, include camera placement and detector zone setup and logic.

2.3.2 Sewer – Plan and Profile Views

- Location of existing and proposed manholes, sewer line, and services in plan and profile
- Stationing along sewer line
- Invert and rim elevations at existing and proposed manholes
- On all manholes with multiple inverts into/out of manholes, clearly identify with directional designation (N,S,E,W, etc.) and notation of direction of flow (in or out)
- Sewer extended to provide service to adjacent properties
- A profile showing sufficient cover and finished street grade and crossing locations showing potential conflicts
- All conflicting public and private utilities indicated up to 300 feet outside of the proposed development.
- Sewer service provided to each lot with station and offset at end of service line
- Pipe material identified
- Slopes, distances, and diameter of main runs
- Slope and invert elevation shown on proposed sewer lines stub-outs for future extension
- Where a line is to be connected to an existing system, the following NOTE should be placed on the final plans: “Contractor shall verify the location of the existing sanitary sewer line before proceeding with trenching.”
- Water and sewer information should be on the same plan sheet unless otherwise approved by the City Engineer.

Where applicable, a NOTE stating, “Sewer taps to be performed by City-approved Contractor.”

2.3.3 Water – Plan and Profile Views

- Location of valves, fittings, fire hydrants and services
- Stationing along waterline
- A profile showing sufficient minimum cover and finished street grade and crossing locations showing potential conflicts
- Fire flow requirements
- Utilities conflicts
- Service to each lot with station and offset at end of service line
- Pipe curvature radius and/or joint deflection angle
- Fittings specified with stations
- All fire service lines plan and profile

- Thrust block details
- Restrained joint pipe table showing restrained joint lengths for all restrained pipe
- Water and sewer information should be on the same plan sheet unless otherwise approved by the City Engineer.

2.3.4 Stormwater – Plan and Profile Views

- Location of manholes, storm lines, catch basins, treatment controls, and other appurtenances
- Stationing along main storm line
- Invert elevations shown at manholes, catch basins, and inlets
- Profile of storm pipe showing cover and finished street grade and crossing locations showing potential conflicts
- All utilities and services with conflicts indicated on profiles
- Pipe material identified
- Slopes, distances and diameter of main runs
- Permanent drainage plan, including drainage basin boundaries and areas
- Existing or natural drainage courses, canals, rivers and ponds
- Curb inlet basins on all arterial and collector streets
- Drainage control at low spots and storm sewers at sag curves
- Slope easements
- Wooden utility pole location
- Storm water information should be on the same plan sheet as street improvements unless otherwise approved by the City Engineer.

2.3.5 Landscaping and Irrigation Plans

For all City owned public facilities and City owned landscaping, the following items shall be required on all plan submittals.

- Existing tree plan showing all existing trees 6-inch-diameter at breast height (DBH) and larger. Show all existing trees proposed for removal or relocation
- Specify any existing vegetation areas that will remain as-is
- Proposed protection fencing locations and type of protective measures
- Location of all structures, streets, driveways, walkways and other hard surfaces
- Identify all proposed plant materials with common name, botanical nomenclature, plant installation size and quantity of each species
- Existing and proposed grading and drainage systems
- Specify mulch types, applied depth, and location
- Specify location of all turf areas and types of proposed turf
- Specify hydrozones and landscaping features

- Schematic piping layout and size to water source
- Location of sleeves under all hard surfaces or construction obstructions
- Location, type, and coverage of each irrigation zone
- Table of hydraulic calculations showing all zones and their overall usage Site structures and obstacles that interfere with the coverage and performance of the irrigation system
- Schedule of heads, numbers of circuits, and sizes of piping
- Location of irrigation controller by note (if remote-offsite) or symbol
- Location of backflow device and 'blowout' for winterization
- Location of all points of connection (POC)

2.3.6 Signing and Striping

- Onsite and offsite signing including MUTCD sign type or legend, size of sign, type of post.
- Existing signing, including MUTCD sign type or legend, to a minimum 300 feet beyond the proposed project limits including size of sign, and condition.
- Proposed signing with MUTCD sign types or legends
- Show any required Type III barricades or road end signage on the plan sheets
- Stations or distances to proposed signing
- Existing signing to be replaced
- Schematics or legends of nonstandard signs
- Existing striping, transitions, and tapers, including lane widths,
- Proposed striping with match points identified
- Proposed lane width and turn bay storage lengths dimensioned
- Line and symbol types and colors identified
- Beginning and end points of tapers, per AASHTO and City of Bend standards, identified with stations
- Removal of existing striping identified
- Striping Quantity Table, including total linear feet of 4-inch line, 8-inch line, 12-inch thermoplastic, and number of symbols by type

2.3.7 Grading and Erosion Control

The following items shall bell be shown on all plans, as applicable.

- Construction entrance(s) / Wheel washes
- Storm Inlet protection
- Tree protection / removal
- 1 foot contours for existing and proposed grades

- Slope mitigation (during construction and post construction)
- Concrete washout
- Stock pile areas
- Stream / Waterway protection
- Sediment control

2.3.8 Calculations

The following calculations shall be shown on all plans:

- Drywell capacity/testing volume in gallons per hour or gallons per 1/2 hour
- Storm runoff hydrograph and drainage system sizing
- Calculations for both offsite drainage and existing site drainage
- Pump station and wetwell sizing, including pump station operating parameters

2.4 CAD Drafting Standards

These drafting standards have been established to facilitate producing drawings that are consistent in appearance and present sufficient information to allow the construction contractor, inspection staff, and City reviewers to know both the broad scope and the details necessary to complete a successful project. Adherence to these standards will:

- Aid in the efficient review and response to of construction plan submittals
- Aid the City in maintaining a complete facilities record of its assets
- Provide an accurate post-construction record of the work

These drafting standards are to be followed by all designers, public and private, who are preparing drawings for the City of Bend. If a project extends, replaces, or calls for construction of infrastructure or utilities that will become the responsibility of the City, these drafting standards will apply. This applies to all infrastructure projects regardless of the initial funding source.

Questions regarding use of these guidelines should be directed to the City of Bend Utility Division CAD/GIS Group.

2.4.1 National CAD Standards

The National CAD Standards (NCS) were used as the basis for development of the Bend CAD standards. As much as possible of the NCS guidance was used in developing the Bend drafting standards. Use of the NCS modules varies depending on the content and applicability. Much of the NCS guidance is directed at building design and construction and only a small portion is focused on utilities and civil design.

Although the City of Bend templates, standard details, and drafting standards are broadly applicable to utility projects, the information and guidance provided herein is not all-encompassing. When a designer finds a need to add or create a feature not contained or addressed in these standards, their first resource should be the NCS guidance.

2.4.2 Drawing Creation and Layout

The City of Bend has created and provides a standard template drawing to designers. This template is populated with the layers to be used.

Drawings will be available to the public, therefore individual company or engineering firm copyrights will not be permitted to be included on plans.

2.4.2.1 Layer System

The City of Bend adheres for the most part (but not totally) to the NCS major and minor group layer name format. See Figure 2-1, City of Bend CAD Standard Layer Naming Convention, for a graphic representation of the layer naming format.

If there is an object for which there is no layer name, the designer shall provide a proposed layer name based on the NCS major and minor group layer name format. At the earliest opportunity, the designer will submit new layer name(s) including the layer/object description to the City for approval. The City will either approve the new layer name or may require the designer to modify the layer name. Once approved by the City, that layer name may become part of the City's list of layer names for all subsequent projects.

No layer names, other than those in the City's layer name list or those having received City approval prior to completion of the design, will be present in drawing files. Exceptions are those layer names automatically created by AutoCAD: "0", "DEFPOINTS".

Layer names created by third party software or add-ons, including Autodesk add-ons, will **Not Be Accepted**.

(See FIGURE 2-1 on the following page)

FIGURE 2-1
City of Bend CAD Standard Layer Naming Convention
City of Bend: CAD Drafting Standards and Guidelines

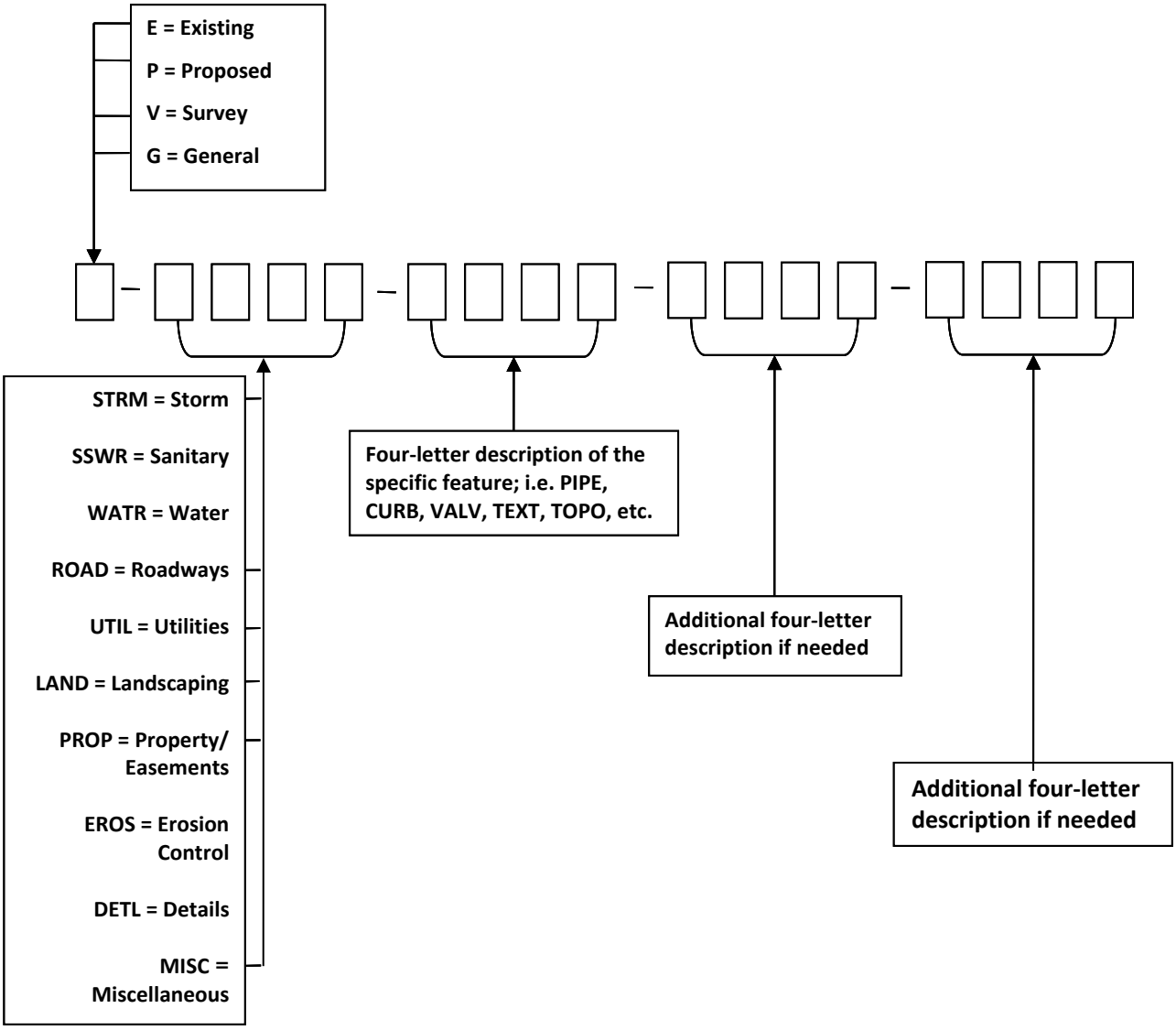

2.4.2.2 Borders and Title Blocks

Standard City of Bend borders and title blocks will be used on all drawings unless otherwise allowed. The City's standard template drawing provides the borders and title blocks for all users. Upon creation or revision of a drawing, the information/attributes inserted into the title block of the drawing shall be revised. All information relevant to finding the file, plotting the file, and dating the plot shall be listed in the appropriate area of the title block. Regardless of the title block location or size, the title block shall contain the following:

1. Project name
2. City's project number
3. Firm/Agency name and/or logo and designer's name
4. Drafter's name

5. Plan checker's name
6. Date of last edit
7. Engineer's stamp
8. CAD file name
9. Other plotting codes

2.4.2.3 Coordinate System

To allow for easy integration of existing and new data, as well as updates of City maps and City geographic information system (GIS) databases, all plans, maps, and exhibits shall be prepared in Model Space using the Deschutes County Coordinate System (DCCS). The DCCS is a commonly used coordinate system, well-monumented within the City and available to all designers. It is also referred to as the "Central Oregon Coordinate System" and the "Deschutes County Grid". In any case, the basis for the coordinates is common to each. Topographic map information and DCCS data are available from the City of Bend Public Works Department. Specific information regarding the basis for, development, and use of the DCCS is also available from the Deschutes County Surveyor's Office:

Deschutes County Surveyor's Office
61150 SE 27th St.
Bend, Oregon 97702
Phone 541-322-7112 Fax 541-388-2719

2.4.2.4 Text

The City of Bend standard text styles named "_ _ SCALE TEXT" are stored in the template drawing, where _ _ is the scale of the drawing.

(Text styles were created using SanSerif at .1 minimum height in paper space)

Open style (_style) and select the proper "_ _ SCALE TEXT".

All text shall be entered using the multiline text (_mtext) feature.

2.4.2.5 Dimension Style

The City of Bend standard dimension styles named "_ _ SCALE DIM" are stored in the template drawing, where _ _ is the scale of the drawing. Open the dimension style manager (_dimstyle) and select the proper "_ _ SCALE DIM".

(Line type scale (_lts) shall be set to "1" for dimensions to display correctly).

2.4.2.6 Leader Lines

The City of Bend standard multileader styles named "_ _ SCALE MLEADER" are stored in the template drawing, where _ _ is the scale of the drawing. Open the multileader style manager (_mleaderstyle) and select the proper "_ _ SCALE MLEADER".

Leader lines are commonly used to identify specific objects or to point out features that may otherwise be overlooked by the plan reader. All leader lines shall terminate with an arrowhead indicating the object of the reference. Good drafting practice avoids leader lines that are:

- Horizontal or vertical

- At the same angle as cross-hatching
- At very small angles to the terminating surface
- Parallel to extension or dimension lines
- Curved
- Crossed
- Too long

Crossing dimensions and leaders are generally to be avoided. When necessary, the leader lines are to be broken so that the lines will not physically cross on the paper.

Multileader lines (_mleader) shall be used for all leader lines.

(Line type scale (_lts) shall be set to "1" for leader lines to display correctly).

2.4.2.7 Blocks

Title blocks, scale blocks, detail titles, detail call-outs and north arrow blocks are pre-populated within the standard template drawing.

2.4.2.8 Symbols

Most commonly used symbols are embedded and pre-populated within the standard template drawing at 1″=20′. The drafter shall scale symbols appropriately for other drawing scales.

For example:

- For 1″=10′ insert or scale symbols by 0.5
- For 1″=30′ insert or scale symbols by 1.5
- For 1″=40′ insert or scale symbols by 2
- For 1″=50′ insert or scale symbols by 2.5
- For 1″=100′ insert or scale symbols by 5

Many design symbols contain attributes to be populated with data specific to that asset. All data acquired during the design process shall be attached to the appropriate symbol using the 'existing' facilities layer.

Table 2-1 provides a listing of project symbols for which attributes are required as part of the new design. These attributes should be shown on the 'proposed' features layer.

TABLE 2-1
Attributed Symbols
City of Bend: CAD Drafting Standards and Guidelines

Topographic Features		
Benchmark	Mailbox	Telephone Manhole
Coniferous Tree	Monument (found)	Traffic Signal Control Box
Control Monument	Monument (set)	Traffic Signal (with mast arm)
Deciduous Tree	Railroad Crossing Arm	Utility Pole
Gas Meter	Sign	Utility Pole with Light
Gas Valve	Telephone Riser	Utility Vault w/Manhole or Hatch

TABLE 2-1
Attributed Symbols
City of Bend: CAD Drafting Standards and Guidelines

Sanitary/Storm Sewer Systems		
Catch Basin	Culvert	Drywell
Cleanout	Ditch Inlet	Manhole
Potable Water System		
Air Release Valve	Fire Department Connection	Pressure Regulator Valve
Blow off Valve	Fire Hydrant	Pressure Relief Valve
Butterfly Valve	Flanged Gate Valve	Single Detection Check Valve
Check Valve	FL x MJ Gate Valve	Utility Vault
Combination ARV	Gate Valve	Water Meter
Double Detection Check Valve	Pressure Reducing Valve	

Should the designer require use of a symbol not found in the standard template drawing, the NCS library of symbols (Module 6) is the first resource. At the earliest opportunity, the designer will submit new symbol(s) including the symbol description to the City for approval. The City will either approve the new symbol or may require the designer to modify the symbol. Once approved by the City, the symbol may become part of the City's list of symbols for all subsequent projects.

2.4.3 Electronic Drawing Format

All drawings shall be produced, saved and submitted in full compliance with the most recent or prior version of AutoCAD® software at the time of submission (file extension = .DWG). Current file save AutoCAD 2007 or newer format.

2.4.4 Drawing File Name

The City of Bend Engineering Division has adopted a file naming convention for project drawings and all project drawing files shall conform to the file naming convention.

All file names shall be CAPITALIZED.

PZ00-000
PZ = private projects
00-000 = project number (supplied by the city)

WA00XX
WA = city water projects
00XX = project number and letters (supplied by the city)

SW00XX
SW = city sanitary sewer projects
00XX = project number and letters (supplied by the city)

SC00XX
SC = city storm water projects
00XX = project number and letters (supplied by the city)

ST00XX
ST = city street projects
00XX = project number and letters (supplied by the city)

2.4.5 Units

Drawing setup/units shall be set to the following:

- Linear units = feet
- Angular units = degrees
- Angle display style = bearings

Display precision settings shall be as follows:

- Linear = 2
- Elevation = 2
- Coordinate = 2
- Angular = 4

Drawing units (units) shall be set to the following:

- Length Type = Decimal
- Length Precision = 0.00
- Insertion Scale = Feet
- Angle Type = Deg/Min/Sec
- Angle Precision = 0d00′00″

(Calculate to the fourth decimal place but label to the second decimal place).

2.4.6 Scale

For line types to display correctly, drawing scale must be set to appropriate scale of drawing. Whenever drawing scale is changed, line type scale (_lts) shall be set back to “1” for line types, leader lines, and dimensions to display correctly.

Graphic scales are embedded and pre-populated within the template drawing and are required on all maps and graphics.

All plan views and horizontal scale of profiles and cross-sections will be drawn in scale 1:1 in model space. Vertical profile scales will vary from project to project and may be selected by the designer. Vertical scales should be selected to minimize the number of view breaks on a sheet.

Certain details may need to be drawn with different horizontal and vertical scales. Horizontal work must be proportional to itself and vertical work must be proportional to itself.

There are a very few instances where it is not practical to draw details to any scale; Where drawings are intended to be diagrammatic or schematic, and for those instances only, a scale will not be required. Such drawings will be noted “NOT TO SCALE”.

Plots for projects will be produced at a scale commonly used by the engineering profession (that is, 1″=10′, 1 =20′, 1″=30′, 1″=40′, 1″=50′, 1″=100′).

Vertical scale for cross-sections and profiles will be drawn to a scale in the same ratio as the final plotted product. For example, if the final plot is horizontal 1″=20′, and the vertical 1″=2′, then the vertical scale is 10 times that of the horizontal so it will be drawn 10 times larger than 1:1.

The practice of drawing at a scale different than 1:1, then making a block with the parts and inserting the block to represent a 1:1 scale, **will be not be permitted**.

Drawing sheets that are not scale relevant, such as construction notes, shall fill the scale attribute box on the title block with the notation “N/A”. The notation “NTS” or “NOT TO SCALE” shall be left to those drawing files that are scalable, but are shown in a scale not measurable with a typical engineering scale, such as details, schematics, etc.

2.4.7 GIS Interface

The City intends, where applicable, to standardize how asset information is captured, stored, and presented in design drawings, with an emphasis on improving the quality and condition of the City’s geodatabase and improving staff efficiencies. This goal is reached through an exchange of the information found on design drawings created by a CAD drafter and used by a GIS technician. Together this creates a system allowing electronic transfer of a subset of asset information embedded through the use of attributes in CAD drawings.

The effort to develop a system of attributed features is currently (September 2009) in development, with the water system being the first utility with a comprehensive set of objects for which attributes may be attached to a design drawing.

In the City’s CAD standard template drawing, many of the more common symbols provide the opportunity to include attribute information. Prior to beginning design, City staff will meet with the designer to determine applicable asset information as it relates to the design/ construction process. Identification of those assets for which attributes can be inserted into a design drawing are currently in development and are more complete for some utilities than others. City staff will provide a list of features that will require attributes as part of the design, along with detailed instructions regarding the process for attaching attributes describing these individual assets.

2.4.8 Line Types, Weights, and Colors

Line types, weights, and colors have been predefined and associated with the appropriate layer within the standard template drawing.

Line type scale (_lts) shall be set to “1” for line types, leader lines and dimensions to display correctly.

2.4.9 Sheet Layout

All sheets shall include the City of Bend’s title block, which is included within the standard template drawing. All appropriate information shall be filled in.

2.4.9.1 Cover Sheet

All projects shall include a cover sheet. One cover sheet may be used when constructing more than one facility (sewer, storm drain, etc.); however, all requirements for the title sheet must be met. The following information shall be included on all cover sheets:

1. **A Site Plan** of the entire project, showing street right-of-way and/or subdivision layout to a scale of 1″=100′. A smaller scale may be used on large projects upon approval of the City Engineer.

   The site plan shall be a composite plan showing all complete properties to be served by the improvements and properties adjacent to and within 100 feet of those served. A north arrow shall be included on the title sheet and shall be oriented to the top or left of the sheet.

2. **Title,** which shall include the following:

   Project name, date, City project or file number; owner's name, address, and phone number.

3. **Sheet Index**

4. **Vicinity Map** to a scale of not less than 1″ = 800′ showing the project location.

5. **City Approvals**

6. **Legend,** which shall include all lines and symbols used.

7. **Permanent benchmarks** used, including their descriptions.

Subsequent, 'general' sheets may be included to show information such as the Legend(s), Permanent Benchmarks or project controls, or similar information when the Cover Sheet becomes too crowded to show all the information requested above.

2.4.9.2 Construction Notes

2.4.9.3 General construction notes are included within the standard template drawing. Any design engineering notes shall not conflict with City general construction notes unless approved by the City Engineer.Site Plan/Profile

Plan sheets shall be laid out and organized in a fashion that facilitates easy plan reading and interpretation. Proposed utility improvements shall be laid out with water and sewer improvements on the same plan sheet and with roadway and storm improvements on a separate plan sheet.

2.4.9.4 Grading Plan/Profile

- Show contours at a minimum of 1-foot intervals.
- Identify drainage direction and drainage basin boundaries.
- Provide cross-sections or profile plans to show existing and final grading.
- Indicate whether land is a cut or a fill.

2.4.9.5 Details

Standard City details do not need to be shall be inserted in paper space. Special details shall be created in paper space.

2.4.9.6 Erosion Control

Show site plan and identify all drainage basins within the area.

Show erosion control methods.

2.4.10 Model Space and Paper Space

All line work shall be in model space.

Standard details and special details shall be in paper space.

Title blocks shall remain in paper space with the use of a viewport for appropriate scaling of the drawing. The viewport shall be on layers:

“G-MISC-VPRT” for a viewport border that will plot, or “G-MISC-VPRT-NPLT” for a viewport border that will not plot.

2.4.11 Drawing Orientation

North arrows are embedded and pre-populated within the template drawing and are required on all drawings where applicable.

Drawings should be typically oriented so that north is the top or right on all sheets. In general the north arrow shall be oriented to allow project stationing to increase from left to right.

North arrows will be inserted in the upper right corner of the sheet. Exceptions may be made, but consistency should be maintained throughout the drawing set.

2.4.12 Standard Details

Standard details are accessible at the City’s website in PDF format. The City of Bend website can be accessed at www.bendoregon.gov.

Standard details are available in PDF format and shall not be altered. If a designer wishes to use portions of a City of Bend standard detail, redrafting is allowed; however, this will create a “special detail” (see below) with a unique assigned number. All City of Bend standard details used on a project must be inserted on a detail sheet(s) in the plan set.

Standard details shall be inserted on the “G -DETL-STND” layer on the detail sheet(s) in paper space at a 1:1 scale.

2.4.13 Special Details

Special details may be created specifically for the project by the designer when standard details are not suitable. Special details will be drawn in paper space on the following layers:

- G-DETL-BOLD
- G-DETL-BOLD-DASH
- G-DETL-DIMS
- G-DETL-FINE
- G-DETL-FINE-DASH
- G-DETL-MEDM
- G-DETL-MEDM-DASH
- G-DETL-PATT

- G-DETL-STND
- G-DETL-TEXT
- G-DETL-TITL
- G-DETL-TTLB

Special details will be called out numerically, with the detail number used only once. Special details will be called out on the plan sheet with an embedded and pre-populated detail call-out block within the template drawing, where the top number is the detail number and the bottom number is the sheet on which the detail is found.

2.4.14 Terms and Abbreviations

Abbreviations shall be used only when enough room is not available to spell out the word. If there is any question as to the meaning of an abbreviation, spell out the entire word. Refer to the NCS terms and abbreviations for all terms and abbreviations.

2.4.15 External Reference (Xref)

Any external reference that was used to create a drawing shall be bound to the drawing and all objects will be transferred to the appropriate layers.

External References Shall Not Be Accepted.

2.4.16 Professional Stamps

Use of professional stamps or seals shall follow the Oregon Revised Statutes (ORS) Chapter 672 regulations. Professional stamps shall be included on all final drawings and plan sets submitted for review for the discipline represented by the work. The placement of the stamp will be within the title block. Professional stamps may be either electronic or manually applied at the licensee's direction.

2.4.17 Plot Styles

Autodesk-Mono.stb has been set in the plot style table within the standard template drawing and shall not be altered.

Plot styles have been set to proper screening within the template drawing and shall not be altered.

2.4.18 Drawing Submittal

Complete drawing set (DWG) shall be submitted fully compliant with the City's CAD Drafting Standards and Guidelines.

All drawing files shall have all layout tabs zoomed to extents (z) (e), prior to any submittal to the City. All drawing files shall be saved with the first layout tab active.

All final drawing files shall be fully purged (purge) prior to final submittal.

All final drawing files shall be saved and submitted with the current layer set to "0".

Consultants shall obtain a file number for the project and make sure that the appropriate information is completed in the title block. File numbers can be obtained from the Project Engineer.

Standard drawing size shall be 22" x 34"

At the conclusion of the project, the designer shall submit a hard copy (minimum of 20 lb., ultra-bright bond paper, 22″ x 34″), a DWG and corresponding image (PDF Format) file of the project drawings in electronic format (CD, DVD). PDFs shall be combined into a single file. Every sheet in the record set of construction drawings needs to have a corresponding (1:1) image file. The image may be produced directly from the CAD application or scanned from the hard copy. Regardless of production method, **the image file must match the content of the CAD file and hard copy for each sheet submitted**. Sheets shall be in landscape orientation with the title block to the right of the sheet, arranged in the order that they are to be printed, and the set assembled matching the drawing index order.

When a project is designed by a consultant who uses the collaboration of sub-consultants, the prime consultant shall be responsible for all submittals of electronic and paper drawing files. Electronic submittals shall be in the form of a single media (1 CD/DVD) and shall include the entire project. All electronic media shall be labeled, including the project name, City's project number, design firm name and submittal date.

2.4.19 City Standard Template

An example cover sheet and required construction notes for Tier III ROW permits is provided as Part VII – Appendix A – Example Tier III ROW Plan Set.

2.5 Final Plan Submittal

The final plan, with all required signatures, is to be submitted to the City of Bend Permit Center for approval. The engineer submitting the plans is required to determine the appropriate signatures of all private utilities, or agencies, beyond those required by the City. All plans require the approval of the City Engineer, or the City Engineer's designee. Once approved, two identical mylars of the front page with all approvals shall be submitted. Along with the approved signature mylars, two sets of plans, two bound sets of technical specifications, and an electronic copy of each shall be submitted.

If any revision is needed to be made to the final plans, either during the final review or during the construction process, the Engineer whose stamp appears on the plans must sign and date each revision. At the completion of the project, the designer is responsible for submitting two complete mylar plan sets that reflect all revisions or changes made to the drawings. Such a revision shall also require that a new set of electronic drawings indicating the revision be submitted to the permit center. Failure to submit final Mylar's will result in the performance and/or warranty bond on the project not being released until this requirement is met. One signed Mylar copy will be retained by the City of Bend and one copy returned to the applicant.

With submittal of the final mylars, an electronic (see 2.4.18 – Drawing Submittal) copy of the entire plan set on CD or DVD shall be submitted. All files necessary to reproduce the complete set of construction documents must be included on the disc. Drawing files must conform to the City of Bend CAD Standards, text files in MS Word, and spreadsheet files in MS Excel.

2.6 As-Built Plan Submittal

Prior to recording a plat or providing certificate of occupancy, as-built drawings (pdf and CAD files) for public infrastructure improvements shall be submitted to the City of Bend. The as-built drawings shall include the full set of approved construction documents

approved by the City under the Final Plan Submittal with all changes applied to the drawings from approved plan modifications and/or engineer of record (EOR) observed changes that have occurred during construction. Field notes shall be provided as a separate document, if applicable. Refer to Part V-Construction Observation and Inspection Requirements. The as-built drawing shall show the following:

- Have all modification clouds removed;
- All construction plan sheets signed by the EOR;
- Each sheet's title block containing the permit number and "As-Built"; and,
- The cover sheet shall contain the following language in a box:
  I certify that this project has been constructed in substantial compliance with the City approved plans and the City of Bend Public Improvement Construction Procedure Standards and Specifications date (XXXX edition). This certification is based on periodic inspections performed by me or by representatives under my direct supervision and information provided by the Construction Contractor and other independent testing and inspection agencies. The information provided by other has been assumed to be correct and has not been verified by the Engineer. This certification indicates that I have reviewed this information and verified that any revision(s) or change(s) as defined by the record do not appear to be adverse to the planned use and/or intent of the original design.

  _____ _____

  Engineer of Record Signature *Date*

2.7 Notice to Proceed

Before construction is started or resumed, final approval of the documents by the City Engineer, or designee, must be obtained, approval by any other affected agencies must be obtained, amended Agreements with the City of Bend must be obtained, and any required fees must be paid.

A pre-construction meeting shall be held prior to the issuance of a Notice to Proceed. Prior to a pre-construction meeting being scheduled all required permit plans must be approved, all required fees have been paid and all paperwork, such as Public Improvement Facilities Agreements (PFIA), are complete. In addition, proof of all bonding required, proof of insurance, any relevant certifications will be presented and copies of signed contracts related to the project must be shown. During the pre-construction meeting inspection requirements for the project will be reviewed that are relevant to the project. Inspection requirements are spelled out in Part V of this document titled "Construction Inspection Requirements". These requirements should be considered from the beginning of design. Notes during the preconstruction meeting will be taken by the inspector. The notes from the pre-construction meeting will include all in attendance, contact information including emergency contacts, and identify all key points discussed in the meeting. The notes will be signed by the City, contractor, and owner. A copy of the notes with signatures will be provided to the contractor, the engineer of record, project manager (if different than the engineer of record), and the inspector will retain the originals in their files for that project. Once all preconstruction requirements are met, a Notice to Proceed will be provided. See Part V, Construction Inspection Requirements, for an example template for preconstruction meeting that will be used on all projects.

2.8 Right of Way Permit Expiration

After any Engineering Permit (i.e., Right-of-Way Permits, Grading Permits, Rock Crushing Permits, Sewer Water Analyses, Traffic Analyses, etc.) has been submitted to the City for review but prior to issuance, the permit will expire after 180 days of inactivity. After a permit is issued, an inspection must be called in within 180 days from the date of issuance and construction must be completed within 365 days from the date of issuance or the permit will expire. Permit extensions requests must be submitted in writing for City Engineer approval.

SECTION 2-3

Streets and Temporary Traffic

Table of Contents

3.0 Streets 3
3.1 References 3
3.2 Deviation from Streets Standards 3
3.3 Design Considerations 4
3.3.1 Traffic Studies 4
3.3.2 Intersection Controls 5
3.3.3 Design Speed 5
3.3.4 Sight Distance 6
3.4 Roadway Design Elements 8
3.4.1 Right-of-way 8
3.4.2 Paved Roadway Widths and Lane Widths 8
3.4.3 Roundabout Design 12
3.4.4 Traffic Signal Design 13
3.4.5 Medians 13
3.4.6 Islands 14
3.5 Roadway Geometry 14
3.5.1 Intersections 14
3.5.2 Horizontal Alignment 16
3.5.3 Vertical Alignment 18
3.6 Other Right of Way Design Elements 20
3.6.1 Sidewalk 20
3.6.2 Curb Ramps and Crosswalks 21
3.6.3 Transit Facilities 25
3.6.4 Driveways 27
3.6.5 Signing 28
3.6.6 Pavement Marking/Striping 30
3.6.7 Curb Painting 31
3.6.8 Mailboxes 31
3.6.9 Illumination 32
3.6.10 Drainage 33

3.6.11 On-Street Parking....33
3.6.12 Traffic Calming Devices....33
3.7 Temporary Traffic Control....33
3.8 Pavement Restoration Requirements....35
3.8.1 Grades....35
3.8.2 Permits....36
3.8.3 Responsible Party....37
3.8.4 General Requirements....37
3.8.5 Pavement Sections....37
3.8.6 Full, Modified, and T-Cut Patching Standards....37
3.8.7 Traffic Control....38
3.8.8 Pavement Cut Restriction (Exception Process)....39
3.8.9 Permits for Non Street Cut Restriction Streets and Street Cut Restriction Streets with Approved Exception....40
3.8.10 Special requirements for Concrete Roads....40
3.8.11 New Development....41
3.8.12 Temporary Pavement Restoration....41
3.8.13 Testing and Warranty Requirements....41
3.8.14 No Dig/Trenchless Technology....42

3.0 Streets

The City of Bend plans and implements transportation facilities that serve vehicular and non-vehicular users. Roadway designs shall be "complete streets" to serve all ages and all abilities both along and across the facility. The following street standards are required to be used when planning, designing and constructing public and private street facilities and right-of-way and public access facilities within the City of Bend.

These street standards shall be used to support the design and construction of land use requirements, exactions and mitigations within the City of Bend as well as public works projects implemented outside of the land use process.

3.1 References

Designs shall conform to the City of Bend Standards and Specifications, as well as current versions of additional references specified in various subsections. Roadway design shall comply with minimum design standards as shown in the standard drawings. Additional references include, but are not limited to:

- City Development Code and Ordinances of the City of Bend
- A Policy on Geometric Design of Highways and Streets (AASHTO)
- Manual of Uniform Traffic Control Devices (MUTCD)
- Oregon Supplements to the MUTCD
- Highway Capacity Manual (TRB)
- Roadside Design Guide (AASHTO)
- Public Right-of-way Accessible Guidelines (U.S. Access Board)
- City of Bend Roundabout Design Consistency Guidelines
- City of Bend Roundabout Design Operational Analysis Guidelines
- City of Bend Intersection Form Evaluation
- Oregon Standard Specifications, and
- All other referenced documents cited herein.

3.2 Deviation from Streets Standards

The City of Bend provides for roadway designs that are flexible and reflective of their context while meeting current safety and operations standards. There may be times when compliance with the City of Bend Standards and Specifications is not desired or possible and the City's design standard deviation process shall be followed to receive approval from the City Engineer. The City Engineer may delegate review authority.

This standards deviation process shall not be used to override a requirement of a land use decision once finalized. The City's Bend Development Code has provisions for requesting modifications to land use requirements. Except as provided elsewhere in other City codes, resolutions and land use actions, written requests for deviations from these streets standards shall be reviewed and may be granted by the City Engineer according to the criteria outlined in Part I Section 2 of this document as well as the following additional review criteria for Streets Standards:

- The deviation is required due to extreme topography or natural resource constraints;
- The deviation is required due to inconsistencies with the function of the street and the adjoining land uses; and
- The request specifically addresses the deviation review criteria found in Chapter 1.3 and those review criteria for the subject standard as provided within this chapter.

3.3 Design Considerations

3.3.1 Traffic Studies

This section defines traffic study requirements for public and private roadway and intersection projects, based on the Bend Development Code requirements in chapter 4.7. The Traffic Study, as opposed to a Traffic Impact Analysis Study provided within a land use action, is used to guide all design and construction aspects of the project. The Traffic Study will be used to identify concept designs, intersection control type, lane configurations, queue storage, access management needs and pedestrian crossing needs, pavement design, roadway geometrics, drainage methodology and right-of-way needs, etc. The traffic study shall identify a need for higher order intersection control and as provided for herein, shall identify and study control warrants.

The traffic study will identify and evaluate:

- Safety
- Existing volumes
- Forecast volumes
- System context (relationship of land uses with transportation system)
- Local context (ROW, design vehicle)
- Anticipated users
- Operations, and
- Corridor influences (upstream and downstream controls, railroad crossings, etc.).

These should be identified and evaluated in order to facilitate a context sensitive design that implements current design standards, safety features, and efficient operations.

Operational analysis shall be provided for the existing traffic conditions, as well as the design year of the project, which is typically based upon the City's current twenty year planning model. Lane configurations, vehicle delays, queuing, and level of service results should be provided to support concept development as well as for the final chosen configuration.

Turn lane storage length shall be separately accounted for when providing the tapers and shall be based on the analysis of the design year's 95th percentile queuing.

Operational analysis for traffic control other than roundabouts (i.e. traffic signals, stop signs) shall be performed using Highway Capacity Manual methodologies except as otherwise allowed by the City Engineer.

Operational analysis for roundabouts shall be performed using methodologies in the City's Roundabout Operational Analysis Guidelines except as otherwise allowed by the City Engineer.

The City of Bend's "Intersection Form Evaluation" guidelines shall guide the analysis and comparison of signals and roundabouts. Where traffic signals are the recommended form of traffic control, optimized signal phasing shall be developed as part of the operational analysis and incorporated into the design. Impacts to system performance shall also be evaluated for traffic signals proposed within signalized corridors.

3.3.2 Intersection Controls

Intersection controls provide right of way guidance to motorists at intersections. Most local–local street intersections will utilize yield and stop controls as provided for in the MUTCD. The use of yield signs may provide the necessary right of way guidance at local-local street intersections and should be considered prior to stop signs.

Higher order control form may be necessary as volumes increase. These higher control forms include roundabout control and traffic signal control. Given similar present and future operational performance, roundabouts are preferred over traffic signal control

Although the City has implemented a 'roundabouts first' approach to intersection control form, however, flexibility is provided to consider other intersection control forms should there be issues identified during the traffic study that warrant further analysis.

Should analysis for other intersection control form be necessary, the City of Bend's "Intersection Form Evaluation" guidelines shall guide the analysis and comparison of signals and roundabouts.

Traffic signals will be considered only where shown to meet MUTCD warrants, and where overall intersection safety and operation will be improved, as indicated by the traffic study. Emphasis is placed on the satisfaction of Warrant 1, Eight-Hour Vehicular Volume, and Warrant 7, Crash Experience (using the three most recent years for which crash data is available). Warrant analysis should be performed using 14-hour traffic volumes based on actual counts.

3.3.3 Design Speed

Design speeds are geared towards incorporating multi-modal compatibility into roadway designs. To this end, the City's standards recognize the impacts design and operating speeds and other design features have on bicyclist and pedestrian safety and operations.

Standard design speeds are provided below for each of the City's roadway classification designations.

Roadway Classification	Design Speed
Major Arterials	35 to 45 mph
Minor Arterials	30 to 40 mph
Major Collectors	25 to 35 mph
Local Streets	25 mph
Alleys	15 mph

Design speeds shall be consistent throughout a cohesive segment of a roadway corridor. Changes in design speeds from one segment to another shall be strongly identified through design feature changes to encourage compliance with posted speeds and to model the street form after the abutting land use form.

A standards deviation to utilize speeds outside of these design speed ranges may be requested of the City Engineer to reflect changes in abutting land use but should not be utilized to reduce the design speed for individual design elements within a cohesive roadway segment (e.g. a single horizontal or vertical curve).

Designers shall recommend a design speed within these ranges for a particular segment of roadway or roadway corridor. The main factors that shall be considered are the abutting land use, the type and characteristics of multi-modal travel along and across the street, and the degree/style of access management that exists along the roadway segment. Supporting factors may include topography, safety and operations, queuing and intersection control type.

In general, design speed ranges are bracketed by slower speed residential and traffic-calmed commercial streets on one end and higher rural roadways or limited access highways on the other end. Mid-range design speeds can include limited access highway, commercial and industrial roadways.

When higher speed designs are utilized for roadways, it may be necessary to incorporate higher level multi-modal design features such as separated bike/pedestrian facilities, raised medians, and enhanced pedestrian crossing safety features.

3.3.4 Sight Distance

A driver's ability to see ahead is of the utmost importance in the safe and efficient operation of a vehicle on a roadway. Designers should provide sight distance of sufficient length for a driver to control the operation of a vehicle to avoid striking an unexpected object in the traveled way.

3.3.4.1 Stopping Sight Distance, Decision Sight Distance

A driver's ability to see ahead is of the utmost importance in the safe and efficient operation of a vehicle on a roadway. Designers should provide sight distance of sufficient length for a driver to control the operation of a vehicle to avoid striking an unexpected object in the traveled way.

All streets shall be designed to provide adequate Stopping Sight Distance (SSD) continuously along the roadway, based on the design speed and in accordance with the

Exhibit 3-1 and 3-2, AASHTO “A Policy on Geometric Design for Highways and Streets”, 2004 Edition.

Design Speed (mph)	Brake reaction distance (ft)	Braking distance on level (ft)	Stopping sight distance - level		Stopping sight distance on Grades					
			Calculated (ft)	Design (ft)	Downgrades			Upgrades		
					3%	6%	9%	3%	6%	9%
15	55.1	21.6	76.7	80	80	82	85	75	74	73
20	73.5	38.4	111.9	115	116	120	126	109	107	104
25	91.9	60.0	151.9	155	158	165	173	147	143	140
30	110.3	86.4	196.7	200	205	215	227	200	184	179
35	128.6	117.6	246.2	250	257	271	287	237	229	222
40	147.0	153.6	300.6	305	315	333	354	289	279	269
45	165.4	194.4	359.8	360	378	400	427	344	331	320

Adjustments for grade and truck traffic shall be made when pertinent. Longer sight distances are desirable, particularly at locations where unexpected, complex, or cluttered conditions exist. AASHTO Exhibit 3-3 provides Decision Sight Distances (DSD), which offer drivers additional margin for error and afford them sufficient length to maneuver their vehicles at the same or reduced speed. The Engineer of Record shall make the determination if SSD is sufficient for design criteria or if DSD should be used, dependent on the complexity of the corridor and typical traffic types/flow.

Both sight distances are based on a height of driver’s eye equal to 3.5 feet, and an object height of 2.0 feet, equivalent to the taillight height of a passenger car.

Designers should coordinate with other disciplines as necessary to ensure that other roadway elements such as median or planter strip landscaping, do not obstruct the required sight lines.

3.3.4.2 Intersection Sight Distance

Sight distance at intersections is provided to allow drivers to perceive the presence of potentially conflicting vehicles, and to allow drivers of stopped vehicles a sufficient view of the intersecting roadway to determine whether to enter or cross it. Although Stopping Sight Distance allows drivers to anticipate and avoid collisions, drivers of major road vehicles may be required to stop or slow to avoid a collision with a minor road vehicle. Designing for longer Intersection Sight Distance enhances traffic operations and is required for all new intersections and driveways. Adjustments for design vehicles and grades shall be made as appropriate.

To provide adequate intersection sight distance, specified areas along intersection approach legs and across their included corners should be clear of obstructions. The dimensions of the legs of these “Intersection Sight Triangles” are dependent on design speeds and type of intersection control. Refer to the 2004 AASHTO “A Policy on Geometric Design of Highways and Streets”, Chapter 9, and Exhibits 9-50 to 9-69 for information on these areas, (called Clear Sight Triangles in the manual).

3.3.4.3 Intersection Sight Distance vs. Clear Vision Area

Similar to Intersection Sight Triangles, Clear Vision Areas are triangular areas adjacent to intersections intended to provide sight distance for conflicting traffic movements by

establishing a prescribed area in which to prohibit sight obstructions. Note that Clear Vision Areas are a planning level tool and are described by fixed dimensions based on road type and land use zones. Clear Vision Areas do not take into account vehicular speeds or intersection control, as do Intersection Sight Triangles. Intersection Clear Vision area is dictated by the Bend Development Code and City of Bend standard drawing R-2.

3.3.4.4 Sight Distance Obstructions

Intersection Sight Triangles and Clear Vision Areas should be identified early in the design process and shown on the plans. Sight obstructions between sight lines two (2) and eight (8) feet above curb grades are not permitted within these areas. Existing obstructions shall be shown on the plans and identified for removal or relocation. Designers may be required to provide sight distance profiles, if deemed necessary by the engineer, to demonstrate that AASHTO requirements are met.

Where sight triangles extend across private property, acquisition and execution of a recorded "Intersection Sight Triangle" easement is required. Such easements shall be granted to the City of Bend and limit the height of vertical features, including but not limited to buildings, walls, fences, berms, signs, roadside terrain and trees/vegetation. Where intersection sight distance cannot be provided, alternative roadway alignments may be necessary.

3.4 Roadway Design Elements

3.4.1 Right-of-way

Rights-of-way shall be dedicated to the public and are utilized for transportation, transit, and bike and pedestrian facilities as well as for above and underground utilities.

Standard right-of-way widths for the roadway classifications are contained in the Bend Development Code, and by reference incorporated as the City of Bend's standards.

Deviations from right-of-way standards may be justified and shall proceed through a standards deviation review process with the City Engineer as identified in Section 3.2 of this document and the following specific right-of-way considerations:

- Safety and operations;
- Existing and projected volumes;
- Status of "complete street" development (sidewalks, bike lanes, pedestrian crossing facilities, etc.); and
- Abutting land use.

3.4.2 Paved Roadway Widths and Lane Widths

Lane configurations shall incorporate "complete street" design principles and provide for pedestrian and bike facilities and pedestrian crossing facilities as required herein. The pavement design shall comply with Chapter 13 of this document.

3.4.2.1 Arterial and Collector Roadways

For all new and reconstructed or modernized arterial and collector roadways the pavement width shall be 56' – 76' curb to curb with a 12' raised median. Arterials and collectors with raised medians shall be designed to accommodate a curb-to-curb clear width of 20' minimum for Oregon Fire Code fire lane requirements. Sidewalks shall be located property-line-tight, permitted to meander to avoid barriers (utilities, trees, etc.) and allow for a one-half foot construction tolerance to the right-of-way line.

For this standard, the following cross-sectional element widths shall also be standard:

Standard 56' Arterial and Collector Roadway	
Cross-sectional Element	**Standard Width**
Travel lane	12'
Bike lane	6'
Planter Strip	7' -18'
Raised Median (total median width)	Varies - 12' min
Left turn lane	14'
Sidewalk	6'
Shy Distance, and Double Yellow Centerlines adjacent to Left Turn Lanes	2'

The planter strip or landscape strip is the area located between a sidewalk and the curb. Planter strip width will vary with available right-of-way. Planter strips vary but are typically 7' in 80' right-of-ways and 18' in 100' right-of-ways. Planter strips shall contain street trees or other approved vegetation when required by the Bend Development Code. Street trees / vegetation alternatives shall conform to the City's landscaping requirements found in Chapter 12 of this document. Planter strip design standards are contained in Chapter 4.6.2 of this document.

Shy distance is measured from the face of raised-median-curb to the center of the abutting yellow stripe. This 2' standard distance provides a lateral positioning away from a curb at the left of the motor vehicle travel lane. This distance also provides for improved channelization of the median to avoid vehicle strikes. When combined with the shy distance measure on the opposite side of the median, and the raised median width of 12', the center portion of the roadway has a 16' separation between opposing travel lanes. Medians can be planted or installed as an impervious surface, typically as stamped concrete. The median landscape design parameters are determined during land use and/or construction plan review.

3.4.2.1.1 Standard Deviation Request – Raised Median

Designers may request a standards deviation review by the City Engineer for elimination of the raised median portion of the arterial or collector roadway while still maintaining the 56' standard street width. The deviation request to convert the

16’ median area to a two-way-left-turn lane would be reviewed under the review criteria of Section 3.2 of this document and the following specific review criteria:

- Driveway spacing;
- Access management;
- Left turn demand;
- Roadway volumes;
- Pedestrian crossing demand and facilities; and
- Sight line availability for driveways and access roads.

3.4.2.1.2 Standards Deviation – Elimination of Median

Designers may request a standards deviation review to eliminate the entire 16’ median on arterial and collector streets under the review criteria of Section 3.2. The curb-to-curb width of this roadway shall be 36’ and striped with 6’ bike lanes, 11’ travel lanes, with 2’ separation between opposing travel lanes. The following specific review criteria shall be utilized:

- There is one, and not more than one, through travel lane in each direction;
- Left turns can be accommodated from the through travel lane without negatively impacting corridor capacity or operations;
- Design speed limit of 35 mph or lower;
- Pedestrian crossings are facilitated by adequate gaps in traffic for single stage crossings of the arterial or collector roadway or are enhanced with signing and striping;
- The arterial or roadway intersection that would remain open due to the elimination of the raised median does not experience significant crashes due to turning movements that would be eliminated by the installation of the median; and
- The horizontal and vertical roadway alignment is adequate to create adequate left-turn intersection sight distance along the roadway segment.

3.4.2.1.3 Standards Deviation – Additional Travel Lanes

Designers may request a standards deviation review for additional travel lanes to accommodate existing or projected vehicle demand on arterial and collector streets under the review criteria of Section 3.2 of this document. The outside-curb-to-outside-curb width of this roadway would be 72’ and maintain the 16’ median. The standard lane width would reduce to 11 feet. The following specific review criteria shall also be utilized:

- Street Policy 21 of the TSP for travel demand management has been addressed; and
- Existing or projected design year volumes greatly exceed the capacity of a 3-lane roadway.

Four lane roadways are generally discouraged due to the difficulties that exist in crossing pedestrians and the inefficiency of the inside travel lanes to accommodate both through traffic and left turning traffic.

3.4.2.2 Local Streets

Within the Bend Development Code requirements exist to plan for fully gridded local street systems with short block length and alley access. The City recognizes that increasing grid and connectivity optimizes emergency vehicle routing, enhances walkability and bikability and reduces traffic volumes on any one local street.

Local streets design standards contained herein were developed to reduce vehicle speed, avoid construction of excessive pavement and create livable neighborhoods. In general these standards provide for narrower streets, on-street parking and sidewalks. These local streets are designed as "queuing streets" in that the space available for use by through traffic varies depending on the on-street parking demand. When on-street parking demand is high, opposing traffic flows are required to reduce their travel speeds or take turns to pass. This builds in traffic calming to enhance neighborhood livability while still maintaining emergency vehicle routing and set-up widths.

The local street standard for cross-sectional element widths are:

Local Streets	
Cross-sectional Element	**Standard Width**
Street within Residential Zoning	24 - 32'
Street within Industrial Zoning	36 - 44'
Street within Commercial Zoning	36'
Cul-de-sac	96' internal diameter, 102' outside diameter (varies)
Sidewalk	5' / 6'
Planter strip	Yes

Bike lanes are generally not provided on local streets. If circumstances warrant the installation of bike lanes, a design standard deviation may be requested to add pavement width for the bike lanes.

On-street parking is allowed on streets if proper width is available for emergency vehicle access. Where parking is restricted, "No Parking" signs shall be posted. Streets that are 24 feet wide allow for no parking on both sides of the street, 28-foot-wide streets allow for parking on one side of the street, and 32-foot-wide streets allow for parking on both sides. Parking is prohibited in cul-de-sacs. Islands at the center of the cul-de-sac bulb are discouraged unless they serve a practical purpose for storm water detention.

Sidewalks are required on both sides of the street and are required to be located property line tight, permitted to meander to avoid barriers (utilities, trees, etc.). Due to the width requirements of cul-de-sac roadways, sidewalks may be located curb-tight.

The planter strip width will vary depending on the street width. Planter strips shall contain street trees when required by the Bend Development Code. Street trees shall conform to the City's landscaping requirements found in Chapter 14 of this document. Planter strip design standards are contained in Chapter 4.6.2 of this document.

3.4.2.2.1 Standards Deviation – Sidewalk One Side of the Street

Designers may request a standards deviation review by the City Engineer to eliminate sidewalk on one side of the street and/or to utilize curb-tight sidewalk under the review criteria of Section 3.2 of this document and the following specific review criteria:

- Hillsides exceeding 15 percent prevailing slope; and
- Adequate stopping sight distance to cross pedestrians to remaining sidewalk.

3.4.2.2.2 Standards Deviation – Narrower paved local streets

Designers may request a standards deviation review by the City Engineer for narrower pavement width where on-street parking is requested to be eliminated under the review criteria of Section 3.2 of this document and the following specific review criteria:

- Hillsides exceeding 15 percent prevailing slope;
- Site topography limits standard street width;
- Frequent driveway spacing prevents on-street parking; and
- No parking signage is adequately designed to ensure compliance.

3.4.2.3 Alleys

The alley standard for cross-sectional element widths are:

Alleys	
Cross-sectional Element	**Standard Width**
Alley	20'

No parking is allowed within the standard widths provided above for alleys. The City may require that alleys be designed and stamped by a professional engineer as part of any permit application.

3.4.3 Roundabout Design

Roundabouts shall be considered and designed according to the City Roundabout Design Guidelines. There are three design guideline documents that are included by reference as the standard for the City:

- Intersection Form Evaluation;
- Roundabout Operational Analysis; and
- Roundabout Design Consistency.

3.4.4 Traffic Signal Design

Traffic signals will be approved only where warranted in conformance with the Manual on Uniform Traffic Control Devices (MUTCD), as indicated by the traffic study approved by the City Engineer.

Traffic signal installations shall conform to the current edition of the MUTCD with Oregon Supplements and City Standards and Specifications. ODOT approval is required for traffic signal installations on state highways within City limits.

All traffic signal plans shall be prepared in substantial conformance with the ODOT Traffic Signal Design Manual. For road improvement projects with existing traffic signals, temporary signals or temporary relocation of existing signal heads may be required to maintain proper signal head alignment during construction.

Unless otherwise directed by the City Engineer, all new or reconstructed traffic signals shall include the following:

- Mast arm type signal poles
- Illumination – with luminaires mounted on signal pole luminaire arms at standard orientation over the mast arms
- Vehicle detection system(video detection unless otherwise directed)
- Pedestrian crosswalks and curb ramps at all corners
- Accessible Pedestrian Signals (APS) with pushbuttons which provide audio and vibrotactile walk indications.
- Countdown Pedestrian Signals
- Emergency vehicle preemption system
- Interconnect, when within or adjacent to a signalized corridor
- Communications infrastructure, such as land-line phone, cellular modem, or wireless interconnect, as determined by the Engineer
- Mast-arm-mounted street name signs

Controller cabinet prints and optimized traffic signal timing shall be prepared for all new traffic signal or signal modification designs.

3.4.5 Medians

A median is defined as the area between opposing traffic lanes. The median includes shy distances as well as raised medians or two-way-left-turn-lanes.

As detailed in Chapter 3.4.2 of this document, the City requires medians to be designed and constructed on all new and all reconstructed and modernized arterial and collector roadways, however, standards deviations can be pursued in order to provide flexibility in design and develop context sensitive roadway designs that reflect the abutting land use.

Raised medians implement access management by reducing conflicting turning movements to improve traffic safety and roadway capacity, however, they should be

designed utilizing a system approach in coordination with the affected properties on a corridor segment basis.

Medians can also improve traffic safety by restricting turns from driveways or intersecting roadways that have inadequate sight lines. Medians can also serve as refuges for pedestrians, facilitate roadway aesthetics and provide space to accommodate left turn lanes. Medians can also be used for storm retention and roadway drainage facilities. Medians also serve to reduce the heat island effect of large expanses of asphalt pavement. Therefore, landscaping within the raised median shall be included and shall meet the City's xeriscaping landscaping requirements found in Chapter 14 of this document.

Median end treatment s shall have offsets and gradual approach tapers as shown in the Standard Details. The design reduces the possibility of vehicles striking the leading edge of the median.

The pedestrian refuge opening requirements shall be governed by the pedestrian and bike system context for the local area. This may include numbers of pedestrians. Median pedestrian island refuges shall meet all PROWAG standards.

3.4.6 Islands

Within the intersection area, the element separating traffic movements is considered an island.

Island end treatment s shall have offsets and gradual approach tapers as shown in the Standard Details. The design reduces the possibility of vehicles striking the leading edge of the island.

3.5 Roadway Geometry

Roadways shall be designed to extend to and through adjoining properties. Designers shall demonstrate with centerline profiles for horizontal and vertical geometry that the roadway can be extended while meeting the City's standards or shall adjust the design to allow for the continuation of the roadway.

3.5.1 Intersections

3.5.1.1 Geometry

Street intersections shall be as near right angles as possible except where topography or existing geometric constraints requires a lesser angle. In no case shall the acute angle be less than 80 degrees.

All intersections shall be designed to provide the required AASHTO intersection sight distance for all movements. At complex intersections, or where unusual or unexpected maneuvers are likely, decision sight distance as shown in AASHTO 2004 Exhibit 3-3 is required. Design shall take into consideration the back of the planning year's 95th percentile queues.

Intersection sight triangles shall be provided at all approaches and necessary grading and clearing performed. At times this will require a sight line easement to be created and purchased. Traffic control devices shall not eliminate the need for the appropriate sight

lines without first receiving a design standards deviation from the City Engineer. The design deviation review for intersection sight distances shall include the following criteria:

- Ability to design intersection at a different location that provides adequate sight distance;
- Ability to provide sight triangles across adjacent property;
- Complexity and level of uniqueness of proposed intersection;
- Extent of access control, number of accesses within functional area of intersection;
- Concentration of travel demand in area;
- Amount of visual clutter or distractions;
- Crash history in the vicinity of the proposed intersection;
- Prevailing speeds on all uncontrolled approaches;
- Traffic volumes and truck percentages.
- Tangent approaches shall be required at all intersections.

Cross streets that intersect arterial or collector roadways shall have their centerlines aligned, with no off-sets allowed unless there is a median on the arterial or collector roadway that creates two tee-intersections.

Curb returns and corresponding grades and transitions shall be designed to ensure drainage of the intersection, with no standing water. Grades shall be noted on each quarter delta of the curb return.

Dedicated right turn lanes on approaches to signalized and roundabout intersections shall be designed to incorporate pedestrian islands to minimize the impact of the additional crossing width of the roadway and intersection.

Channelized turn lanes are not easily navigated by pedestrians with total blindness. Adequate way-finding, orienteering, and reduced speed approach speeds must be provided in order to be fully accessible. Gap identification supplements may be necessary.

3.5.1.2 Curb Radius and Curb Returns

The minimum curb radius shall be as follows:

Curb Return Type	Minimum Curb Radius
Local-local	15 feet
Local-collector	20 feet
Local-arterial	20 feet
Collector-collector	25 feet
Collector-arterial	35 feet
Minor arterial – major arterial	55 feet

Where a radius larger than 35 feet is desired, or where site constraints warrant, a 3-centered symmetric compound curve shall be used. Three-centered symmetric compound curves shall be designed only on right-of-way sufficiently large to accommodate 12 feet minimum between curb face and the property line. The radii of the 3-centered symmetric compound curve shall be 120-feet 40-feet 120-feet. The offset of the 40-foot radius shall be determined by the design vehicle as follows:

Design Vehicle	Offset
SU	2 feet
BUS	3 feet
WB-40	4 feet
WB-50	5 feet
WB-67	6 feet

3.5.2 Horizontal Alignment

3.5.2.1 Cross slope

Standard normal cross slope is 2 percent straight line with a crown in the center of the roadway. Unless approved by the City Engineer, cross slopes shall not exceed 4%. Standard roadway alignment shall place the centerline of the roadway at the centerline of the right of way. This may lead to a negative superelevation for some relatively flat curves. Particular attention shall be paid to the design of downhill left turns and downhill left turns on rightward turning curves to ensure overturning hazards are eliminated.

3.5.2.2 Superelevation

Superelevation is to be used only as a design element to enhance drivability of horizontal curves on arterial and collector roadways. Superelevation design is typically around the road centerline in conformance to AASHTO's 2004 Exhibit 3-40 (A). The use of superelevation for other purposes, or on local streets, shall require a design deviation from the City Engineer.

The maximum design superelevation shall be 0.060 ft/ft, however in conditions where traffic operations frequently limit travel speeds to below the design speed, the maximum design superelevation shall be 0.040 ft/ft (4.0%) to reduce the possibility of sliding during snow and ice conditions. Minimum design superelevation shall be 0.020 ft/ft (2.0%).

3.5.2.3 Horizontal Curves

The minimum radius of curvature for a particular superelevation rate shall be calculated using AASHTO's 2004 formula 3-10 and those values presented in AASHTO's 2004 Exhibit 3-15 and 3-16.

Street Class	Design Speed (mph)	Friction Factor (f)	Super Elevation, e (%)						
			-2.0	0.0	2.0	3.0	4.0	5.0	6.0
Local	15	0.38	50	47	44	43	42	Not Recommended	
	20	0.27	107	99	92	89	86		
	25	0.25	198	180	167	160	154		
Collector	30	0.20	333	300	273	261	250		
	35	0.18	510	454	408	389	371		
Arterial	40	0.16	762	667	593	561	533	508	485
	45	0.15	1039	900	794	750	711	675	643

Compound horizontal curves should be avoided on streets having a design speed of greater than 30 mph. If a compound curve is necessary, the ratio of the flatter radius to the sharper radius should not exceed the following:

- 31 – 49 mph design speed 2 : 1
- 50 + mph design speed 1.5 : 1

Where the ratio exceeds these limits, a suitable length of spiral or a circular arc of intermediate radius shall be inserted between the two curves.

Adjustments for traveled way widths shall be provided based on AASHTO's 2004 Exhibit 3-48 and 3-50 in order to reduce the amount of off-lane tracking on horizontal curves for the design vehicles ranging from bus to semi-tractor trailer combinations.

On all streets having a design speed greater than 30 mph there shall be a minimum 100-foot tangent section between reverse horizontal curves.

3.5.2.4 Pavement Width Transitions

At times there are transitions that need to be accommodated to widen or reduce pavement widths. These transitions shall utilize the recommended MUTCD taper length formulas as follows:

For speeds 45 mph or greater; $L=WS$ and

For speeds less than 45 mph; $L=WS^2/60$

Where:

L = length of the taper (in feet)

W = off-set distance of the travel lane (in feet)

S = design speed of the roadway (in mph).

Reviews shall include identification and mitigation for downstream roadside obstacles when pavement widths are narrowing.

3.5.2.5 Deceleration Tapers for Auxiliary lanes

AASHTO's 2004 Exhibit 9-95D (L=149 feet or L=102 when approved by City Engineer) is the City's standard to provide for entry into left turn lanes and right turn lanes on curbed urban streets. This asymmetrical reverse curve system provides for urban speeds, reduces the possibility for snow plow damage, and reduces the possibility that drivers can hit the leading edge of the taper resulting in loss of control of the vehicle.

Turn lane storage length shall be separately accounted for when providing the deceleration tapers and shall be based on the analysis of the design year's 95th percentile queuing.

3.5.2.6 Sight Distance

Standard AASHTO 2004 Exhibit 3-1 stopping sight distances for the design speed shall be provided continuously along a roadway including provision of stopping sight distance sight lines through medians and park strips around horizontal curves.

3.5.3 Vertical Alignment

3.5.3.1 Sight Distance

Vertical curves shall conform to the American Association of Streets and Highways Transportation Officials (AASHTO) design criteria and be designed to provide at least the stopping sight distance shown in AASHTO 2004 Exhibit 3-1. These distances are considered minimums; additional sight distance is recommended to provide drivers with additional margin for error. Longer decision sight distance is needed at critical locations such as those with concentrated demand that are visually cluttered, at changes in cross-section, or at intersections where unexpected or unusual maneuvers are required. AASHTO 2004 Exhibit 3-3 provides decision sight distances for various maneuver types.

3.5.3.2 Minimum Grades

To allow for adequate drainage, the minimum longitudinal tangent grade is 0.5 percent for all roadways.

3.5.3.3 Maximum Grades

Street grades shall be determined with consideration of topographical conditions and relation to existing and planned streets. Where intersections occur on roadway sections with moderate to steep grades, grades shall be reduced through the intersection wherever practical to facilitate vehicular turning movements and reduce the potential for crashes.

Roadway Classification	**Maximum Permissible Grade**
Local Streets and Alleys	10%*
Collectors, Major	8%*
Arterials (Principal, Major, Minor)	6%*

*Exceptions:
1. Grade breaks - Grade breaks are permitted within a corridor, but are not to exceed 1.0% every 100-feet.
2. Hillsides – Street grades on hillsides exceeding 15% slope may exceed maximum street grades, subject to Fire Department approval.

3.5.3.4 Sag Vertical Curves

Minimum lengths of sag vertical curves shall be determined in accordance with AASHTO 2004 requirements, using equations 3-48 and 3-50 and Exhibit 3-74, using stopping sight distances as the value of S. These minimum lengths provide for headlight sight distance.

Design controls in terms of (K), rate of curvature, for each design speed and corresponding stopping sight distance, are shown in AASHTO Exhibit 3-75. To provide for adequate drainage, K values for sag curves shall not exceed K = 167.

Design Speed (mph)	Stopping sight distance (ft)	Rate of vertical curvature, K
15	80	10
20	115	17
25	155	26
30	200	37
35	250	49
40	305	64
45	360	79

3.5.3.5 Crest Vertical Curves

Crest vertical curves shall be designed to provide at least the stopping sight distance for the design speed of the road. Equations to calculate these minimum lengths, based on differential in grade for a given design speed are shown in AASHTO 2004 Equations 3-41 through 3-44. Exhibit 3-71 provides a graphical representation of minimum curve lengths based on rounded values determined from these equations. Design controls for stopping sight distance and crest vertical curves expressed in terms of terms rates of curvature (K) are provided in Exhibit 3-72.

Design Speed (mph)	Stopping sight distance (ft)	Rate of vertical curvature, K
15	80	3
20	115	7
25	155	12
30	200	19
35	250	29
40	305	44
45	360	61

3.5.3.6 Intersections

At intersections, the grade break permitted at the gutter line is not to exceed 4%. This allows for a -2% standard crown thru-street to grade break and max slope up at +2% for an accessible crossing between curb ramps.

Only at stop controlled intersections can the vertical curve “K” be less than AASHTO standards dictated in sections 3.5.3.4 and 3.5.3.5 above. The vertical curve at the intersection must have a minimum 50-foot length and not be less than the 15 mph “K” value.

3.6 Other Right of Way Design Elements

3.6.1 Sidewalk

The City of Bend in association with the transition plan for City of Bend Americans with Disabilities Act (ADA) Transition Plan for Curb Ramps and Sidewalks in the Public Rights-of-way August 2013 and the 2016 – 2018 ADA Transition Plan for Curb Ramps in Public Rights-of-Way update. The City has developed the following design guidelines and policy in association with the Unites States Code of Federal Regulations (CFR) (See 28 CFR 35). The 2010 ADA Accessibility Standards are guidelines for helping meet Federal ADA requirements set forth in PROWAG. Curb ramps are required for both new construction and most reconstruction projects. Additionally, maintenance operations or approved privately funded (public) improvements may require upgrades, roadway surface alterations or addition of ADA facilities.

Sidewalk construction and location details shall be as shown on the Standard Details. Asphalt sidewalks are not permitted. Asphalt trails may be used in place of sidewalks as planned in the City's Transportation System Plan. It is not desirable to have two parallel facilities (sidewalk and trail) therefore, when replacing the sidewalk, the trail shall conform and meet all sidewalk requirements as outlined herein.

Sidewalks shall be located within the right-of-way. If design deviations to this location are desired then a request shall be made of the City Engineer. Deviation considerations shall include the review criteria from Chapter 2.2 as well as these specific criteria:

- The centerline of the sidewalk shall not meander more than 35 feet from the street curb line; and
- Where topographical or vegetation limitations require, 15' public access easements (7.5' each side of centerline) shall be provided.
- Sidewalk shall be 5-6 feet in width as required by the Bend Development Code.

3.6.1.1 Obstructions

Structures and obstructions including but not limited to fire hydrants, street signs, utilities, utility poles, signal poles, central delivery mailboxes, and individual mailboxes shall not be located in the accessible path of travel portion of the sidewalk.

3.6.1.2 Horizontal Alignment

Sidewalks shall be constructed abutting the property line (back of walk at 6 inches from property line). Designers may meander the sidewalk from the property line when necessary due to topographical or vegetation issues, rather than economical or other design issues.

The sidewalk shall generally follow a smooth and gradual alignment free of sharp angles or bends; horizontal curves shall not be less than 20' radius.

3.6.1.3 Vertical Alignment

Sidewalk grades shall comply with PROWAG guidelines. Changes in vertical elevation of the sidewalk with respect to the roadway's running curb elevation can lead to difficulties in achieving ADA compliance with running slopes and ramp slopes.

The total vertical separation between the top of curb and the top of the sidewalk influences roadside grades and cross-slopes of planter strips.

When curb tight sidewalk is constructed, the total vertical separation between the top of curb and the top of sidewalk shall be zero feet – the sidewalk shall be flush with the curb.

3.6.1.4 Surface alterations

A roadway **alteration** includes activities such as reconstruction, rehabilitation, resurfacing, widening, and projects of similar scale and effect (See 2010 ADA Accessibility Standards, section 106.5). Maintenance activities such as filling potholes, minor pavement patching, and limited trench cuts for utilities are not typically considered alterations. However, any of these activities that occur within a street level pedestrian walkway (a marked or unmarked crosswalk) may not reduce the path's accessibility (See 28 CFR 35.133(a). A street level pedestrian walkway (e.g. marked or unmarked crosswalk) is where the pedestrian would cross an intersecting road, regardless if curb ramps are currently present.

3.6.1.5 Sidewalks Through Driveways

Sidewalks shall travel through City Standard driveway aprons at sidewalk grade, with the driveway being segmented by the sidewalk. To maintain their effectiveness, detectable warning surfaces should not typically be used where an accessible route of travel intersects a residential or commercial driveway entrance or within a parking lot. However, the City reserves the right to require detectable warning surfaces at certain high volume commercial entrances that may function like a roadway. The minimum sidewalk width through driveways is 4 feet, zero inches.

3.6.2 Curb Ramps and Crosswalks

All required curb ramps must meet the Public Rights-of-Way Accessibility Guidelines (PROWAG) published by the U.S. Access Board. The City, by this reference adopts PROWAG into its standards.

Curb ramps are only required where there is a pedestrian walkway (e.g. a sidewalk or trail/path) with a *prepared surface* that intersects a roadway. *Prepared surfaces* may include concrete, asphalt, or other compacted materials such as soil and granite. Concrete and asphalt are the two most common *prepared surfaces* found in Bend.
Conditions for curb ramp construction:

1. If any work (new construction or reconstruction) impacts a curb where there is a pedestrian walkway (e.g. a sidewalk or trail/path) intersecting a roadway then a new ramp or replacement of an existing non-compliant curb ramp must be constructed.
2. If any work includes resurfacing through a street level pedestrian walkway (e.g. marked or unmarked crosswalk), even if the work is not the full width of the roadway, curb ramps must be built or reconstructed on both ends of the crosswalk.
3. If any sidewalk work connecting to an existing non-compliant ramp that requires any modification to any portion of the ramp to meet current sidewalk design standards, then the entire ramp shall be reconstructed to current standards.
4. If any utility trench work impacts a curb at a cross walk, with or without a ramp, the replacement of an existing non-compliant curb ramp must be constructed.

5. If utility trench work does not impact a curb ramp but is “limited to a portion of the pavement, including a portion of the cross walk” replacement of an existing non-compliant curb ramp may not be required (dependent on overall project scope and required pavement restoration limits).

Any Land Use application for new development that includes requirements for sidewalk construction or frontage improvements meeting current City Standards, all curb ramps along the property frontages shall be reviewed for compliance with current standards. Any non-complaint curb ramps along the property frontage must be brought into compliance. This requirement must be included as a Condition of Approval in the Land Use Decision.

3.6.2.1 Number and Direction of Curb Ramps

The City prefers each new intersection to be designed with two (paired) curb ramps per corner allowing for all directions of travel, unless site conditions require modification. These are often referred to as **directional** ramps. If site conditions prevent the use of directional ramps, the Design engineer must provide documentation to the City Engineer for review and approval as described in 3.6.2.2.

An example of “all directions of travel” in this case means six curb ramps at a T or three legged intersection. This would be two curb ramps at each corner (one per crosswalk) and two on the “top of the T” allowing for crossing of both roadways.

At a four legged intersection this would be eight curb ramps (two at each corner, one per crosswalk). Each ramp shall run parallel to (in line with) each crosswalk (regardless of if the crossing is marked or unmarked).

3.6.2.2 Type of Ramps Preferred and Documentation

A perpendicular curb ramp for each crosswalk is the City’s most preferred design because it does not present unnecessary grade changes in the path of travel for pedestrians that are not crossing the roadway.

If existing site constraints such as the required use of a “curb tight” sidewalk prevent the use of perpendicular curb ramps, the next most preferred and allowable design options include parallel or combined perpendicular/parallel curb ramps which still provide a separate and distinct curb ramp for each crosswalk. Documentation in writing of existing site constraints preventing the use of a perpendicular curb ramp and instead utilizing parallel or combined perpendicular/parallel curb ramp design must be provided to and approved by the City prior to construction.

A single diagonal curb ramp or blended transition (a blended transition in this case is when the entire sidewalk is depressed at the corner and the resulting landing is shared by two crosswalks) at a corner may only be used when significant existing site constraints do not allow two ramps to be installed (one per crosswalk). Documentation in writing of these significant existing site constraints must be provided to and approved by the City prior to construction. To summarize the City’s requirements for selecting an appropriate curb ramp design, the following flow chart is provided:

- Most preferred: **Perpendicular** curb ramp for each crosswalk (two per corner)
- **Parallel** curb ramp for each crosswalk (two per corner)*

- **Combined** perpendicular/parallel curb ramp (this provides a separate and distinct curb ramp for each crosswalk)*
- Least preferred: **Diagonal** curb ramps or blended transitions shared by two crosswalks (only allowed with significant existing site constraints that shall be fully documented, provided in writing to and approved by the City prior to construction)

*Allowable only if constraints dictate, such as the required use of "curb-tight sidewalk." Documentation in writing shall be submitted to and must be approved by the City prior to design and construction.

3.6.2.3 Existing Physical Constraints

Where existing physical constraints make it impracticable for altered elements, spaces, or facilities to fully comply with the requirements for new construction, compliance is required to the extent practical within the scope of the project. If the engineer of record deems the work is not practical due to existing constraints, the City Engineer will decide whether any deviation or claim of impracticality is justified. (For more information on existing physical constraints, see below).

A common example of "within the scope of the project" would be when all work related to a project is restricted to one corner of an intersection. In this case the project would only be responsible for providing two accessible curb ramps at this location (regardless of what was present in the existing conditions). The project would not be responsible for constructing new or altering existing curb ramps on the other corners of the intersection outside of the project limits.

Existing physical constraints can include, but are not limited to, underlying terrain and topography, right-of-way availability, underground structures, adjacent developed facilities, drainage, or the presence of a notable natural or historic feature.

3.6.2.4 Design Details

Curb ramps must be designed to fit the site and must be detailed on constructions plans. The design must provide sufficient horizontal and vertical control and the drawings annotated to ensure that ramp conforms to federal, state, and local accessibility standards. Curb ramps with corresponding grades and transitions must be designed to ensure proper drainage of the intersection. Grades including running slopes and cross slopes must be noted on each quarter delta of the curb return. The City may require that curb ramps be designed and stamped by a professional engineer as part of any permit application.

To assist in the City's review of plans and for contractors and inspection staff to ensure compliant and quality ramp construction, the following information is required to be shown in plans:

- **Running slope** (parallel to path of travel) percentage and direction
- **Cross slope** (perpendicular to path of travel) percentage and direction
- **Control points** with finished grade and top of curb (where applicable) elevation information*
- **Dimensions** of features (e.g. length and widths of ramps and landings)

*Control points may include throats of ramps, top and bottom of ramps and landings, tie-in points to match existing or other proposed features, and any wings or curb returns.

Per PROWAG, the absolute legal maximum constructed slopes allowed are:

- 8.3%* (or 12:1 run/rise) for a **running slope** (parallel to the direction of travel); and
- 2.0% (or 48:1 run/rise) for **cross slope** (perpendicular to the direction of travel).

Since the City recognizes that when curb ramps are constructed in the field some tolerances from the design may occur, designers are directed to use the following maximum design values to ensure the constructed ramps and sidewalks will be below the following PROWAG required absolute legal maximum slopes:

- For **running slope** (parallel to direction of travel) the maximum design value should be 7.5%*
- For **cross slope** (perpendicular to direction of travel) the maximum design value should be 1.5%

*Per PROWAG, curb ramps and transition ramps are not required to be longer than 15 feet.

3.6.2.5 Additional Definitions and Requirements

ORS 801.220 defines crosswalks as any portion of a roadway at an intersection or elsewhere that is distinctly indicated for pedestrian crossing by lines or other markings on the surface of the roadway. Where no marked crosswalk exists, a crosswalk is every crossing of an intersection.

In general, when a feature in the public right-of-way is altered, the requirements for new construction must be applied to the maximum extent feasible. Any design that does not meet the accessibility requirements for new construction must be documented in writing, submitted to and approved by the City prior to construction.

Detectable warning surfaces are required on all accessible curb ramps, and where the pedestrian paths of travel cross intersecting roadways, such as a paved trail intersecting a roadway with no curb. PROWAG refers to this as a blended transition. Detectable warning surfaces must extend for the full width of the curb ramp or blended transition.

3.6.2.6 Planter Strip

The planter strip is that portion of the roadside that is located between the curb and the sidewalk. Planter strips are required to conform to roadside safety requirements in terms of their slope, landscaping, appurtenances, utilities, etc.

The landscaped portion of the planter strip must be a minimum of 5 feet wide, except where the sidewalk meander returns to be adjacent to the curb. In order to prevent sharp re-entrant angles in the landscaped portion of the planter strip, an edge not less than 8 inches long and squared to the curb must be constructed at the juncture of the sidewalk to the curb.

Planter strips must contain street trees when required by the Bend Development Code. Street trees shall conform to the City's landscaping requirements found in Chapter 12 and sight distance requirements in Chapter 3.3 of this document. Planter strips may be utilized for swales or landscaping and shall conform to the applicable Bend Development Code

provision. When used for landscaping, the landscaping shall conform to the City's xeriscape and landscape provisions found in Chapter 12 of this document.

The cross-slope of the planting strip between the curb and the right-of-way must not be steeper than 4H:1V to provide a recoverable roadside slope. All appurtenances, utilities and structures located within the planter strip that are roadside safety obstacles must comply with roadside safety principles of Chapter 1.6 of this document. Obstacles must be located as far from the roadway as possible and be designed with recoverable slopes or breakaway foundations complying with AASHTO "Standard Specifications for Structural Supports for Highway Signs, Luminaires, and Traffic Signals, with interim revisions."

The planter strip must not contain stairs. Stairs are not allowed to be located within the public way. Deviations to this standard may be submitted to the City Engineer for design standard deviation review per the requirements of Chapter 3.2 of this document.

3.6.2.7 Exceptions

This section identifies exceptions to the ADA requirements. The City's Transition plan outlines requirements for operation of the ADA program. This design guideline does not set direction of maintenance activities or operational goals outlined in the transition plan. However, when a ramp upgrade or installation is required, it must meet these requirements unless otherwise stated in a project scope or contract.

3.6.3 Transit Facilities

Bus stop locations, bus pull-out locations and transit facilities located within the public right-of-way shall be approved by the City Engineer.

When evaluating bus stop locations or a corridor of stops, the impact on roadway operations and safety shall also be considered. Analysis inputs should include: dwell time; bike lane and travel lane blockage effects; transit vehicles ability to enter and exit the flow of traffic; convenience and safety of passengers; and convenience and safety of pedestrians accessing the bus stop.

Transit facilities shall be designed to incorporate roadside safety features by locating benches and shelters far away from the traveled edge of the roadway, as close to the right-of-way line as possible. Deviations in sidewalk alignment to facilitate the installation of transit facilities shall be designed to comply with the horizontal alignment requirements of this chapter. Consideration should be given to using breakaway support features to reduce the crash severity of vehicle run off the road events when elements cannot be located with adequate clearance to the traveled way.

3.6.3.1 Bus Stop Locations

A Transit or bus stop is a designated place along a transit route typically in the street right-of-way where a public transit vehicle stops to load and unload passengers. The following are design guidelines for the locations of bus stops:

- Distance between stops is typically 800 feet;
- Stops are located in areas where passengers have a safe and direct access to sidewalks, walkways and waiting areas;

- Passengers have access to an accessible route to and from the bus stop and onto the bus;
- Convenient access for pedestrians;
- Analysis and design of safe pedestrian crossings of the roadways are incorporated into bus stop locations;
- A properly developed and located bus stop allows for safe movement by the bus in to and out of the main traffic flow.

3.6.3.2 Types of bus stop locations

3.6.3.2.1 Far-side

Far-Side bus stop is a stop that is located immediately following an intersection and is recommended when:

- Traffic in the direction the bus is traveling is heavier approaching the intersection than leaving the intersection;
- There is high demand for right turns in the direction the bus is traveling;
- The crossing street is a one-way street where traffic flows from left to right;
- The location is one that offers a clear advantage for transit riders by providing improved access to a major destination or to other intersecting bus routes;
- Priority control at the traffic signal is utilized to maintain bus schedules.

3.6.3.2.2 Near-side

Near-Side bus stop is a stop that is located immediately before an intersection and is recommended when:

- Traffic in the direction the bus is traveling is heavier leaving the intersection than approaching the intersection;
- The cross street is one-way where traffic flows from the right to left;
- The location is one the offers a clear advantage for transit riders by providing improved access to a major destination or to other intersecting bus routes.

3.6.3.2.3 Mid-block

Mid-block bus stop is a stop that is generally located 100 feet or more before or beyond an intersection and is recommended when:

- The distance between intersections far exceed the standard for bus stop spacing;
- Traffic or physical street characteristics prevent siting a stop close to an intersection;
- The bus stop serves large businesses, housing developments, or other significant trip generators.

3.6.3.3 Bus Stop Turnouts

Bus stop turnouts are not standard for arterial and collector roadways. Design standard deviations review shall consider the following criteria:

- Bus dwell time;
- Dwell time impact on bicyclists; and
- Width of roadway and impact of following vehicles passing bus during dwell time on arterial or collector roadway operations and safety.

When approved, bus turnouts shall be designed in accordance with the current standards set forth in AASHTO.

3.6.4 Driveways

The locations of new driveways shall be approved through land use (e.g. part of a master plan, subdivision, or site plan) and through a right-of-way permitting process. Driveways shall be reviewed with the following considerations:

- There is a valid land use approval for the driveway (or it is confirmed that no land use approval is necessary for the driveway in question);
- There is only a single access point to the property;
- The access is to the lowest classified roadway facility abutting the property (alleys are lower classifications than local streets);
- Adequate intersection sight distance for all turning movements in and out of the proposed driveway are provided;
- The driveway meets the following minimum spacing (10 feet apart (bottom of curb drop to bottom of curb drop))
- Maximum distance to an intersection is provided given the lot configuration and site layout;
- Driveways shall not compromise safety and operations; and
- Where a driveway is proposed across the street from another driveway, alley, or street, the path of travel should be aligned, where possible.

Concrete driveway approaches are required on all new construction or reconstruction where sidewalk or curb is existing or proposed. Asphalt driveways are permitted where sidewalk or curb is not existing or proposed, as approved by the City Engineer. New alleys or reconstructed alleys must have a driveway approach at the intersection of the alley and roadway. The driveway approach shall be designed to ensure that all drainage is contained on-site. Design standards deviation requests to consider a curb return rather than a driveway approach may be considered by the City Engineer in accordance with 4.2 and the following specific driveway review criteria:

- The design vehicle for the site is too large to accommodate turns within the standard driveway apron; and

- All site drainage is still contained on-site.

The minimum sidewalk width through driveways is 4 feet for construction within the City of Bend. The design shall provide sufficient horizontal and vertical control and the drawings annotated to ensure that driveway conforms to federal, state, and local accessibility standards.

3.6.5 Signing

No sign shall be designed for or installed within public right-of-way unless it has first been reviewed and approved by the City Engineer or designee.

Street signs and barricades shall be designed and installed according to City of Bend Standards and Specifications, and meet the requirements of the most current edition of the Manual on Uniform Traffic Control Devices (MUTCD) as well as the Oregon Supplements to the MUTCD. This applies to signs and traffic control devices on all streets open to public travel, whether publicly or privately owned or maintained.

To provide appropriate roadside safety, ground-mounted signposts shall be breakaway in compliance with the current AASHTO "Standard Specifications for Structural Supports for Highway Signs, Luminaires, and Traffic Signals, with interim revisions."

New signs shall be installed, and existing signs modified, to reflect new lane configurations and in coordination with existing or revised pavement markings. Remove and replace signs beyond the project limits as necessary to reflect changes implemented with the project.

Existing signs within project limits that are not in compliance with these requirements in terms of offsets, siting, physical condition, and applicability shall be updated to bring them into compliance.

Plans shall reference signs by MUTCD type, and include designs for all non-standard signs. Designs for standard signs are provided in FHWA's Standard Highway Signs manual; ODOT's Sign Policy and Guidelines and the City's Standard Details include designs for Oregon- and City-specific sign designs not found in the federal manual.

Before any new highway, detour, or temporary route is opened to traffic, all necessary signs and barricades shall be in place. Signs necessitated by road conditions or restrictions shall be removed when those conditions cease to exist or the restrictions are withdrawn. Temporary TRAFFIC CONTROL CHANGE AHEAD signs, installed on wood posts, shall be installed on any project that changes traffic control type.

3.6.5.1 Placement

Sign installations shall not block pedestrian paths of travel in the sidewalk; an ADA-compliant pedestrian access route shall be maintained at all times.

For arterial and collector roadways, the signs shall be visible from, at a minimum, the stopping sight distance of the roadway for the design speed (AASHTO). This requires that street name signs not be placed too far around curb returns on side streets to meet the visibility requirements. Existing and proposed site features shall be reviewed to ensure that there are no existing or proposed obstructions to sign visibility within this required sight distance.

Signs for private streets at intersections with public streets (i.e. Stop sign/street name sign installations) shall be installed within public right-of-way.

End-of-Road Markers shall be installed on dead-end or stub streets where the pavement ends. Type III barricades are advisable where a higher level of visual cue is desired, such as where the end of roadway precedes a non-traversable slope or major obstruction. Type IV OM4 object markers may be considered on low volume roads.

Type III barricades, with appropriate road closed signage, shall be installed at the end of the traveled way when the pavement continues but travel is restricted beyond a certain point. The barricades shall effectively block traffic. Barricade colors, reflectivity, and design shall conform to the most current edition of the MUTCD with Oregon Supplements.

3.6.5.2 Horizontal and Vertical Clearance

Sign installations shall comply with the most current edition of the MUTCD and City of Bend Standard Details. Vertical and horizontal clearance to the sign face shall be maintained for vehicular and non-motorized traffic.

3.6.5.3 Sign Design

Detailed drawings of standard signs and alphabets are shown in the Federal Highway Administration (FHWA) Standard Highway Signs manual and ODOT Sign Policy and Guidelines, current edition. These guides shall be followed for sign dimensions, colors, messages, letters, numerals, spacing, borders, etc., except as otherwise provided in these City Standards and Specifications.

Drawn-to-scale drawings for nonstandard signs shall be included in the construction plan set for approval prior to fabrication.

Standard post-mounted street name signs are single-sided; signal mast arm-mounted street name signs and central island roundabout street name signs are single-sided. Refer to Standard Drawing R-7, R-7A, R-8 and R-9.

3.6.5.4 Street Name Signs

Street name signs naming both streets shall be installed at each intersection. The signs shall be mounted with their faces parallel to the streets they name.

In business districts and on collectors and arterials, street name signs shall be placed in at least two locations, on diagonally opposite corners so that they shall be on the far right side of the intersection for traffic on the major street. On local streets and residential areas, street name signs shall be placed in at least one location for each intersection.

Street name signs at signalized intersections shall be mounted overhead on signal pole mast arms for optimal viewing. Such signs shall be included on the Traffic Signal Plans. Maximum sign sizes and placement specifications apply; refer to the Oregon Standard Drawings.

Signs for private streets shall be installed on private property, outside of public right of way. Such sign installations shall incorporate a supplemental PRIVATE DRIVE sign mounted below the standard street name sign.

3.6.5.4.1 Colors and Visibility

Public street name signs shall have a white border along the outside edge of the sign and white lettering. The colored background shall be green.

Private street name signs mounted on private property at locations other than intersections with public streets shall include a background color of retro-reflective green, blue, brown, or black, with white retro-reflective lettering. Private street name signs shall be accompanied by a supplemental black on yellow PRIVATE DRIVE sign when installed at intersections with public streets.

School-related signs shall be fluorescent yellow-green.

3.6.6 Pavement Marking/Striping

Striping and other pavement markings shall be provided on all arterial and collector streets within City limits. Striping of local streets is not required unless deemed necessary by the City Engineer.

Striping designs shall comply with the current edition of the MUTCD with Oregon Supplements, and City Standards and Specifications. Oregon Standard Drawings TM500-TM503 contain pavement marking line and legend details.

Plans shall show and identify a minimum of 300 feet of existing striping beyond the project limits, to ensure proper tie-in to existing striping. Where project limits occur within 500 feet of existing pavement or striping tapers, limits of striping plans shall be extended to include the full taper. Plans shall show and identify all existing striping and include all striping removal necessary to implement new striping as shown.

Plans shall reflect the following City standards:

- Left turn lane transitions - where painted center medians transition to left turn lanes, gaps are preferred over reverse curves.
- Turn lane storage shall reflect 95th-percentile queues as determined in a queuing analysis, which shall be submitted with the striping plan.
- The City does not use raised pavement markers (RPM's) on the roadway surface, due to snow removal operations.
- Leading ends of raised medians and islands shall be painted yellow or white as applicable, in conformance with the MUTCD. Reflective RPM's of the same color shall be placed on the top of the curb around the leading ends of medians and islands. In addition, surface-mounted tubular markers shall be installed as shown in City's Standard Detail for median end treatments.
- Where a fixed obstruction is present within a paved roadway, such as a raised median preceded by a painted median or two-way-left-turn-lane, the approach area shall be marked with Transversee diagonal lines and no passing lines, unless otherwise provided in Section 3 of the MUTCD.
- Marked crosswalks shall be provided at all signalized intersections and at other locations according to the City's Standard Operating Policy. Crosswalks shall not be marked at uncontrolled locations without City Engineer approval.

3.6.7 Curb Painting

Curbs shall be painted yellow for a total of 20 feet approaching a stop sign. Curbs shall be painted red for a total of 20 feet at fire hydrants, 10 feet on either side of the hydrant.

Paint shall be high performance latex, designed for streets and parking lots. The paint must meet federal specification TT-P-01952E Type II. The paint should be suitable for surfaces such as Portland cement concrete, bituminous cement concrete, asphalt, tar, and previously painted areas of these type surfaces.

Colors must meet Traffic Standards for the Traffic Yellow and OSHA Safety Red. Examples of common colors and their FED-STD-595 color chip Yellow – #33538 and Red – #31136.

The curb must be prepared for the paint application. Any organic material near the curb shall be removed, existing loose paint shall be scraped off, and oil spills shall be cleaned.

Acceptable methods of cleaning the curb surface are high pressure washing and/or hand scrubbing using clean water and clean water to rinse.

Surface shall be clean and completely dry before application of paint starts.

Curb shall be painted from the top seam of the curb (sidewalk or planter strip edge) to a point even with the driving surface and within the limits specified by the City of Bend and its representative.

Paint areas shall be protected (masked, taped or both) to prevent dripping or over spray of paint onto the sidewalk or street surfaces and to provide clean/straight edges.

Apply the paint per manufacturer's specifications, or typically when the weather is between 60 and 80 degrees Fahrenheit and overnight temps do not drop below freezing for optimal adhesion. Choose a day when the weather is dry and when the wind is not blowing to avoid the wind carrying the paint and to prevent blowing debris onto the freshly painted surface.

3.6.8 Mailboxes

Mailboxes located within roadway rights-of-way are subject to these Standards and Specifications. Roadside design safety aspects shall be considered. Fatal crashes have occurred within the City of Bend due to vehicles striking mailbox fixed object hazards that did not provide breakaway supports. Foundations and support structures of individual and cluster postal delivery boxes shall meet the current AASHTO "Standard Specifications for Structural Supports for Highway Signs, Luminaires, and Traffic Signals, with interim revisions."

The mailbox shall be firmly secured to the post to ensure that the impact of a vehicle does not loosen the box which could then become a flying object hazard.

Mailboxes shall not require that users cross an arterial or collector roadway. Mailboxes shall be located on the users side of arterial and collector roadways.

For all new and reconstructed roadway projects, rural delivery mailbox styles shall be considered for consolidation into cluster postal delivery boxes.

The location of cluster postal delivery boxes shall be shown on the engineered plan submittal drawings for review and approval. The United States Postal Service will approve the location of cluster postal delivery boxes.

An accessible pedestrian path of travel must be designed and constructed to the mailbox per PROWAG requirements.

An accessible pedestrian path of travel must be maintained on sidewalks adjacent to cluster boxes per PROWAG standards.

Cluster postal delivery boxes shall not be located on arterial and collector streets, unless otherwise approved by the City Engineer. Their location shall be shifted to nearby and convenient local streets. When locating the cluster postal deliver box care should be taken to locate it in an area that minimizes impact on abutting properties.

The back edge of the sidewalk shall smoothly meander back from the central delivery mailbox station to provide a 5-foot wide unobstructed pathway. The edge of the mailbox shall comply with the City's Clear Zone Requirements of this document.

3.6.9 Illumination

Streetlights are required at all street intersections with collectors and arterials, including private street intersections with collectors and arterials. This requirement does not extend to alley intersections. Requests for street lights at other locations shall be reviewed in conformance with the Transportation Division's Standard Operating Procedure and installed only with City Engineer approval.

Separate street lighting plans are not required for most projects although proposed streetlights shall be shown on plan and profile or utility sheets. Plans must include the following:

- Proposed pole locations shall comply with the City's Roadside Safety requirements of this document.
- Power supply shall be provided via underground wiring and conduit systems conforming to power company requirements.
- Fixtures shall be cut-off fixtures to minimize light pollution and up-lighting.
- Light poles and fixtures shall be approved and maintained by the power company.

On private development projects, all costs of installation shall be borne by the developer. The City will pay for ongoing power and maintenance expenses for public street lighting. Ongoing expenses for private street lighting (including power costs) shall be borne by the developer or homeowner's association.

Decorative lighting will not be permitted without special approval and maintenance agreements signed by the City Engineer.

The City encourages the use of energy-conserving luminaire fixtures. Proposed equipment must be approved by the City Engineer and the power company.

3.6.10 Drainage

Roadways shall comply with the storm drainage requirements of Chapter 6 of this document.

The standard drainage inlet feature for arterials and collectors shall be curb inlet when bike lanes are present.

3.6.11 On-Street Parking

On-street parking shall be designed to accommodate parking parallel to the curb. There may be instances when head in or back in angle parking is desirable. The City will consider these instances on a case-by-case basis.

3.6.12 Traffic Calming Devices

Traffic Calming Devices in the context of the standards means specific traffic calming devices designed to restrict travel speeds over or through a specific location. Traffic calming devices include neighborhood traffic circles (which are very specifically not roundabouts), speed humps and raised pedestrian crossings. Within the context of this document, traffic calming devices are not curb extensions, medians, roundabouts, signals, stop signs or cross-walks as these are typical operational or cross-sectional elements of roadway design.

City standards provide for arterial and collector roadway designs that are reflective of their abutting land use zoning and are sensitive to their surrounding context. The installation of traffic calming devices are not allowed on arterial and collector roadways due to their negative impacts on emergency vehicle routing, maintenance issues, and truck circulation issues.

Traffic calming devices are restricted in use to local residential streets or local commercial streets. Requests for traffic calming devices during the land use process may be evaluated for local residential streets. However, their use shall be approved by the City Engineer and shall not be installed without this approval. Consideration shall be given to emergency vehicle routing.

Currently the City allows traffic circles and raised speed tables or raised pedestrian crossings as traffic calming devices on local streets. Their designs shall conform to the standard drawing for these elements.

3.7 Temporary Traffic Control

The primary function of temporary traffic control is to provide safe and efficient movement of all road users through or around work zones while protecting those within the work zone. The City requires temporary traffic control, based on a City-approved Traffic Control Plan, for all improvement projects, public or private, performed within, or impacting travel on, public right-of-way.

Traffic Control Plans (TCP's) shall be provided for review with the ROW permit submittal.

Traffic Control Plans shall be developed according to the following:

<u>TCP's must be in substantial compliance with:</u>

- The Manual on Uniform Traffic Control Devices (MUTCD), current edition; see Chapter 6. *http://mutcd.fhwa.dot.gov/pdfs/2003r1r2/ch6a_e.pdf*
- The Oregon Supplements to the MUTCD
- The Oregon Temporary Traffic Control Handbook for Operations of Three Days or Less (OTTCH) when applicable *http://www.oregon.gov/ODOT/HWY/TRAFFIC-ROADWAY/docs/pdf/OTTCH_06.pdf*

Additional Resources:

- Oregon Standard Drawings, TM 800 series – contains additional information and details for traffic control scenarios not found in the OTTCH. *http://egov.oregon.gov/ODOT/HWY/ENGSERVICES/traffic_drawings.shtml*

Non-project related TCP's need not be CAD-drawn, but must be legible and scaled or dimensioned to clearly indicate relevant spacings and distances. Figures from the references listed in this Chapter may be utilized whenever applicable, and customized as necessary. At a minimum, TCP's must show the following:

- Existing features within 300 feet of the work area (# of lanes, turn lanes or medians, bike lanes, sidewalks, stop signs, traffic signals). (Extend to 500 feet if work area is within 500 feet of a traffic signal.)
- All proposed Traffic Control Devices, including signs, cones/tubular markers, barrels, barricades, etc. Identify devices by MUTCD types or Legends/Colors, and size.
- Posted speed. Work zone area component lengths and device spacings are dependent upon prevailing speeds of area traffic. Speed signs for speeds less than the permanently posted or statutory speeds may only be implemented with a Temporary Speed Zone Reduction approved by the City Engineer.
- Spacing of all Traffic Control Devices. See Section 1.9 of the Oregon Short Term Traffic Control Handbook
- Lengths of the Temporary Traffic Control Zone Area components, including the Advance Warning Area, Transition Area, Activity Area (Buffer Zone+Work Zone), and Termination Area. See Section 1.9 of the Oregon Short Term Traffic Control Handbook or Section 6C of the MUTCD for required lengths.
- Proximity to nearest intersection. Site specific drawings are required for all work zones within 500 feet of a signalized intersection. Note that Oregon law prohibits flagging through an operating traffic signal (except for uniformed traffic control officers). Lane reductions through an operational, signalized intersection may be permitted on multi-lane facilities.
- Accommodations for non-motorized vehicles and pedestrians within a work zone must be provided – See Section 1.3 of the OTTCH. A minimum 4-foot wide path of travel must be maintained on all pedestrian or bicycle ways left open to users. Closures of pedestrian ways and bicycle lanes must be clearly indicated, and users diverted upstream at appropriate locations. Signs used shall be MUTCD-compliant.
- Existing traffic control devices, including stop signs and traffic signals, within 300 feet of the work area. Detour signing must show each proposed sign, and

include signing adequate to direct motorists through the complete detour route and back to the original roadway. Detours shall be used only with an approved Street Closure Permit approved by the City Manager.

Modifications to approved traffic control shall be made during construction, if deemed necessary and directed by the City Engineer.

Temporary Traffic Signals - Plans for temporary traffic signals shall include the same information required for permanent installations.

Traffic Signal Removal Plan/Traffic Signal Staging Plan – such plans, when deemed necessary by the City, shall be prepared in the same format and including the same information referenced above.

3.8 Pavement Restoration Requirements

3.8.1 Grades

The City of Bend establishes a "Grade" based pavement cut standards system developed on the date of construction, the last qualifying pavement treatment applied and the Pavement Condition Index (PCI) rating of a pavement. These standards will be in effect for any City roadway from initial construction or from the time the most recent qualifying pavement treatment was applied. The PCI and road classification (Arterial, Collector or Local road) will determine which Grade must be used.

Grade 1 - Pavement Cut Restriction Standard (PCI 100-60, < 5 years): Pavement cuts will only be allowed on an emergency basis or through the wavier process defined in Part I Section 2. No planned or permitted cuts will be allowed when these standards apply. If pavement cutting is necessary for emergencies, pavement restoration will be at the direction of the City Engineer and may include a full width restoration.

Grade 2 – Full Standard (PCI 100-60, > 5 years): Pavement cuts must be full depth and extend twelve inches (12") beyond the nominal trench edge longitudinally and Transversely (Standard Drawing R-10) and be a minimum of four (4) feet in width. Pavement cuts must be at lane and skip lines. Transverse trenches (perpendicular to the center line) that are less than 20' (inside edge to inside edge) apart shall be patched as one patch. Restoration must extend from curb to fog/bike lane line (5-7' from curb); curb to centerline (if cut is past fog/bike lane line) and curb to curb (if past centerline).

Grade 3 - Modified Standard (PCI 59-40): Pavement cuts must be full depth and extend twelve inches (12") beyond the nominal trench edge longitudinally and Transversely (Standard Drawing R-10) and be a minimum of four (4) feet in width. Pavement cuts must be at lane and skip lines or center of traveled lanes. Transverse trenches (perpendicular to the center line) that are less than 20' (inside edge to inside edge) apart must be patched as one patch.

Restoration must extend from:

- Curb to fog/bike lane line (5-7' from curb);
- Fog/bike lane line to center of traveled lane;
- Center of Traveled lane to center line;

- Fog/bike lane line to centerline; or
- Curb to curb (if past centerline).

All pavement restoration must be shown on the permit plans and approved prior to construction. Half lane improvement are on a case by case basis and as approved.

T-Cut Standard (PCI 39-0): Pavement cuts must be full depth and extend twelve inches (12") beyond the nominal trench edge longitudinally and Transversely (Standard Drawing R-10) and be a minimum of four (4) feet in width.

Applicable standards based on Grade (number of years since last qualifying pavement treatment) and City Street Classification is established in the following table:

TABLE 1- RESTORATION REQUIREMENTS BY CLASSIFICATION AND TIER

Classification	PCI 100 - 60 < 5 years	PCI 100-60	PCI 60-40	PCI 40 - 0
Local	Grade 1	Grade 2	Grade 3	T - Cut
Collector	Grade 1	Grade 2	Grade 3	Grade 3
Arterial	Grade 1	Grade 2	Grade 2	Grade 3

Grade 1 - Pavement Cut Restriction Standard;
Grade 2 - Full Standard;
Grade 3 - Modified Standard; T - Cut Standard (ACP Only)

Note: Proposals to deviate from the standards described above may be allowed at the discretion of the City Engineer and will require approval in advance by the City Engineer. See exemption process described below. During the permit review process, the City Engineer will determine the applicable standard based on the above table. (See figures 1-9 attached)

3.8.2 Permits

As part of obtaining a Right-of-Way permit per Bend Code, Chapter 3.40, Permittee must submit a complete application to Community Development Department for review and approval. A Right-of-Way application is available on the City website. The City Engineer will determine the restoration requirements in accordance with these Standards. The Permittee must provide the City Engineer at least twenty-four (24) hours notice prior to completing final restoration to allow for inspection. The permittee shall notify the City within 48 hours after completion of the work (3.40.025). Warranty period will not begin unless the final inspection has been completed. Permittee is responsible for all work until the permit is closed and the warranty period begins.

If the City Engineer determines, in the City Engineer's discretion, that previous violations of these Standards exist, future construction work may be disallowed until the Permittee has fulfilled all obligations. Written notification by the City Engineer will be sent prior to this action.

3.8.3 Responsible Party

The Permittee shall be responsible for all construction and warranty requirements of these standards even when the work is done by a Permittee-retained contractor.

3.8.4 General Requirements

Materials must comply ODOT Standards and specs and as amended by the City of Bend's Standards and Specifications.

a. All patching materials and construction requirements not addressed in this document must conform to the City's Special Provisions Section 00744.

b. To the extent Controlled Low Strength Material (CLSM aka CDF) is required for a particular repair, the Permittee must follow ODOT Standard Specification, Section 00442 – Controlled Low Strength Materials.

3.8.5 Pavement Sections

Pavement Sections must meet the pavement design standards in Section 11.4 and comply with the following standards, or as specified in a stamped geotechnical report as approved by the City Engineer:

a. Alleys shall be 4 inches of pavement and a minimum of 6 inches of base rock.
b. Local roads shall be 4 inches of pavement and a minimum of 6 inches base rock.
c. Collectors shall be 6 inches of pavement and a minimum of 8 inches of base rock.
d. Arterials shall be 8 inches of pavement and a minimum of 10 inches of base rock.

3.8.6 Full, Modified, and T-Cut Patching Standards

Patching must comply with the following standards:

a. Longitudinal cuts that extend through multiple grade classifications require discussion with the City Engineer to determine the appropriate patching approach. In principle, each road section will be patched according to the applicable standard and grade in which it is ranked; however, the City retains the right to require a higher level grade at its discretion.

b. For all full depth asphalt repairs on local roads, the minimum asphalt thickness shall be 4 inches, or match the existing depth of asphalt, whichever is greater.

c. Existing base rock disturbed within full depth asphalt repairs must be re-compacted prior to paving. For trench backfill requirements Bend Standard Specs. (see Standard Drawing R-10)

d. All cold-planed surfaces must be swept and kept clean at all times. All cold-planed materials must be removed and disposed off-site at the cost of the Permittee.

e. If a new patch adjoins an existing patch, the existing patch will need to be replaced up to 20 feet from the edge of the new patch. This will be on a case by case basis and will be at the discretion of the City Engineer.

f. If any part of the excavation, patch or damaged area intrudes into an adjacent lane, that lane must also be replaced.

g. New patches adjacent to any existing patch must be combined into one patch if there is less than 4 feet separation.

h. When two (2) or more patches on the same project are created within twenty (20) feet of each other (inside edge of trench to inside edge of trench), they must be incorporated into a single patch at the expense of the Permittee. The total number of street cuts should be kept to a minimum. If there are three or more street cuts within a block every effort must be made to combine all three into one patch. It is at the discretion of the City Engineer to determine the final pavement restoration limits of a project.

i. All restoration shall be shown on approved permit plans; otherwise the grade standards apply in full.

j. Pavement cuts must be straight and clean and must be either parallel or perpendicular with respect to the travel lane. No jagged, broken or undermined edges will be allowed unless otherwise approved by the City Engineer.

k. All pavement cuts shall be sealed hot crack seal methods. Hot crack seal must be consistently applied throughout, four (4) to six (6) inches in width.

l. Contractors must use ODOT approved release agents and tack when placing multiple lifts of ACP.

m. The top lift of asphalt for all longitudinal repairs with a length that exceeds thirty (30) feet must be placed using a paving machine with a screed or an asphalt spreader box.

n. The completed surface of all courses must be of uniform texture; smooth, uniform as to crown and grade and free from defects. The completed surface of the wearing course must not vary more than one-quarter (¼) inch from the lower edge of a twelve (12) foot straightedge placed parallel to the centerline. Tolerance exceptions and corrective measures due to existing roadway conditions or other reasons must be approved by the City Engineer.

o. All areas outside of the travel lanes or shoulders that are affected by the work must be restored to their original condition.

3.8.7 Traffic Control

Permittee must use Section 3.7 for all traffic control.

3.8.8 Pavement Cut Restriction (Exception Process)

After any street has been constructed, reconstructed, paved or overlaid by the City, the pavement surface must not thereafter be cut or opened for a period of 5 years or as directed by the City Engineer or Director of Streets & Operations. It is understood that field conditions or emergencies may warrant an exception to this Policy. However, the exception process in NO WAY obligates the City to allow cutting or opening the Street Cut Restriction Street, and any such decisions are at the City's discretion.

A utility desiring to perform work in Street Cut Restriction streets must schedule a meeting with City staff prior to submittal of a permit application. If an exception is granted, the Private Development Engineering Department will make a concerted effort to protect the integrity of the pavement structure, and to ensure a high quality replacement patch or overlay. Additional restoration requirements and extended limits will apply.

When granting exceptions to this policy, the Streets Director or City Engineer may impose conditions determined appropriate to insure the rapid and complete restoration of the street and the surface paving.

Valve and manhole repairs must be exempt from the patching requirements of these standards. Valve and manhole patching requirements must be in accordance with City Standards. All warranty and construction requirements must be met. No longitudinal construction joints must be allowed in the wheel path.

Potholing to find utilities must be exempt from patching requirements of these standards. To be exempt, it is preferred that all potholes are cut with a core/hole saw. If a larger pot hole is required the pavement cuts must be less than two (2) feet square with no joints in the wheel path and must be backfilled with CLSM or other City approved fill from twelve (12) inches above the utility to bottom of asphalt. Core holes must be hot patched in the existing pavement.

City capital improvement projects will be subject to testing and warranty requirements that are established under the applicable public procurement contracts.

An exception from the street cut restrictions standards may be granted if the City Engineer determines that impacts to vehicle, bicycle, and/or pedestrian traffic would negate the public benefit of this standard.

3.8.8.1 Exception Request

Permittee may seek an exception of these Standards as follows:

a. Permittee must submit an exception request to the City Engineer identifying the proposed project, the impact the project will have on the roadway, the timeline for completion and explaining how all alternative solutions including avoidance have been exhausted.

b. A meeting with the City Engineer to discuss the project may be required and the City may request additional information.

c. The City Engineer must accept or deny any such request. If a request is accepted, the City Engineer may attach conditions of approval that require additional restoration of the area affected and/or special

inspections, the cost of which shall be borne by the Permittee.

3.8.9 Permits for Non Street Cut Restriction Streets and Street Cut Restriction Streets with Approved Exception

No excavation or tunneling must be performed under any area within public rights-of-way prior to first obtaining the applicable permit from the City (permits for emergency work may be issued after the fact per this policy).

Applications for utility permits must be made on forms provided by the City. The applicant must describe the purpose, location, and size of the anticipated construction project (work), the name of the person/firm performing the actual work, and the name of the person/firm for whom the utility work is being performed. The application must be endorsed by the person/firm for whom the work is being performed or the person's/firm's agent. By signing the application, it is understood that the person/firm performing the utility work will comply with the requirements of this policy and any conditions imposed upon the work.

Depending on the impact to traffic, pedestrians, businesses or residents, public notification plans (signs, advertisements, flyers, public service announcement, etc.) may be necessary and submitted as part of the permit application. It is the responsibility of the permit applicant or the duly authorized representative to coordinate with all affected neighbors. A pedestrian detour route shall be clearly delineated whenever sidewalks are obstructed.

Emergency utility or service lateral repair work necessary for the immediate preservation of life or property is acceptable; provided that any person making such emergency repair work they call for emergency locates. Permittee must notify the City Engineer of emergency repairs not later than the next business day. The ROW restoration for such emergency repairs must be in conformance with the criteria stated in this policy. Note, work necessary to locate faulting utilities, conduits or pipes during the emergency situation is considered part of the emergency repairs. Permittee must make every reasonable effort to restore the roadway quickly.

When the City Engineer determines that traffic conditions, safety or convenience of the public necessitates ROW utility or service lateral construction and repair be performed as quickly as possible, the City Engineer will require the permittee to provide adequate personnel, equipment, and facilities on a 24-hour basis such that the utility or service lateral work be completed as soon as practicable. This may include, but is not limited to, flaggers, temporary traffic control signs and devices, lighting, etc. The permittee must be responsible for the cost of providing the necessary personnel, equipment, and facilities.

If work is being performed within Highway 20 & 97 (including Parkway 3rd St and Greenwood), coordination with Oregon Department of Transportation (ODOT) may be necessary and the applicant must comply with their requirements for all work solely in the ODOT jurisdiction. For any work in that is jointly permitted, the utility/permittee must provide a copy of the ODOT permit to in conjunction with the City's permit application.

3.8.10 Special requirements for Concrete Roads

All concrete road cuts must be pre-approved before beginning work (except in the case of an emergency situation). Concrete roads must require full panel replacement unless approved otherwise by the City Engineer. All concrete joints must require an approved tie

bar and dowel retrofit. Depth of concrete replacement must match the existing thickness or as directed by the City. Care must be made not to undermine the existing panels. If the adjacent panels are disturbed or damaged, they also must be replaced at the City Engineer's direction. All joints must be sealed with material approved by the City Engineer. Where concrete roads are overlaid with asphalt, the concrete must be replaced as described above and asphalt portion of the cut must be constructed according to the pavement standard.

3.8.11 New Development

These standards are minimum standards applicable to all cuts made in existing roadways. For new development, additional requirements may apply. Contact the Community Development Department for specific additional requirements.

3.8.12 Temporary Pavement Restoration

Pavement must be restored with temporary patches before the road is reopened to traffic as defined below. The Permittee must maintain the temporary patch until the patch has been permanently restored. Gravel surfacing is not acceptable as a temporary patch.

An immediate patch may be used to open the roadway to traffic. Immediate patches may include the use of steel plates with signs or be a minimum of two (2) inches thick cold mix asphalt on two (2) inches thick crushed surfacing. Immediate patches will only be allowed while work is being completed and must be replaced with an interim or permanent patch within seven (7) days after placement. Steel plates must be pinned and ramped with cold mix asphalt. At the direction of the City staff or City Engineer, Steel plates may not be used from November 1st to the end of March 31st. Higher classification roads are on a case by case basis. Steel plates may only be used for less than 5 working days.

When a permanent patch cannot be completed within seven (7) days of an immediate patch, an interim patch must be used to keep the roadway open to traffic. Interim patches must be a minimum of two (2) inches thick ACP on two (2) inches thick crushed surfacing. Interim patches must be replaced with a final patch within thirty (30) days after placement.

Material exceptions may be requested in the event that the ACP Plants have shut down for the season or at the discretion of the City Engineer. Material exception forms must be submitted with the final inspection. Permittee is responsible for making final restoration within 45 days of the ACP plants opening for the season or as directed by the City. Permittee must submit photo documentation, and street location of all street cuts with material exceptions 5 days prior to completing the work

3.8.13 Testing and Warranty Requirements

ACP testing must be in accordance with Bend Standards and Specifications. Patches greater than 8' in width will require density testing per the Bend Standards and Specifications and ODOT Standards and Specification (current adopted version). The City reserves the right to require density testing on a case by case basis if field observations indicate minimum compactive efforts are not being achieved as required in the Bend Standards and Specification.

Pavement restoration on roadways under all pavement cut standards will have a minimum warranty period of one year and up to (2) years. The patch must be repaired if necessary until the warranty has passed.

All warranties will become void if the road receives a qualifying pavement treatment within the patching limits. Qualifying pavement treatments include the following but are not limited to: Mill and overlay, removal and replacement, thin lift overlay, large area patches half a block in length, and half a lane in width or full street reconstruction. Slurry seals, chipseals, and fog seals are not considered pavement treatments; they are considered a maintenance treatment.

All warranty work requires that a City inspector be on site. The Permittee must be required to coordinate inspection with the City Engineer.

The following minimum defects identified by the City Engineer must be covered by warranty (but not limited to):

a. Sunken pavement patches greater than or equal to one-quarter inch (1/4") (measured by a twelve foot (12') straight edge).

b. Surface raveling or oxidation due to deficiencies with the asphalt material.

c. Poor workmanship.

d. Inadequate compaction per Bend Standards and Specifications.

Notice of Repairs

e. If emergency repairs are needed due to safety concerns, the Permittee must immediately make such repairs and give notice to the City Engineer.

f. For non-emergency repairs on arterial or collector streets, the Permittee has forty-eight (48) hours in which to make such repairs from time of verbal notice by the City Engineer. For residential streets, the Permittee has up to seven (7) days to make such repairs.

g. The City may undertake the repairs if not completed within the specified timeframes above. The City Engineer must notify Permittee of non-compliance and Permittee must make all identified repairs within two (2) business days of notification of noncompliance. Repairs involving public safety maybe made by the City without notice. Permittee will be assessed all costs associated with the City performed repairs, plus fifteen percent (15%) overhead fees.

h. If repairs are made other than seam sealing to the warranted patch, a new warranty will be implemented for the new patch.

3.8.14 No Dig/Trenchless Technology

To minimize damage to road surfaces and other surface infrastructure, implementation of no dig/trenchless technology is the preferred method for most utility work.

3.8.14.1 Trenchless Technology Plan Requirements

Applicants for work in the ROW planning to use trenchless technology must submit plans prepared by a qualified professional. Any qualified professional, as defined in this policy, experienced in trenchless utility installation may prepare plans for simple work. Typical "simple work" includes borings of 100' or less perpendicular to street alignment and borings of 200' or less parallel to road and sidewalk surfaces. For longer distances, the applicant must meet with Department staff to discuss the proposed operations. The City Engineer may require the plan to be prepared by a qualified registered civil engineer,

geotechnical engineer or geological engineer licensed in the State of Oregon and require additional studies or information than those required for “simple work”. The plans for “simple work”, at a minimum, must address/consider the following:

a. The proposed bore path (bore plan and profile must be provided) should be planned to allow sufficient room from other utilities or structures for workers to perform maintenance or operations on adjacent utilities. There must be a 5-foot minimum horizontal and 18-inch vertical separation between the proposed utility and City sewers or as otherwise directed. However, additional separation may be required depending upon depth of new utility installation, environmental factors, and engineering conditions.

b. The locations of other utilities within or adjacent to the proposed bore path (within 5 feet) must be shown. Include proposed potholing locations.

c. In preparing the plan, location of other structures such as manhole covers, valve box covers, meter boxes, telephone and cable television boxes, electrical transformers, conduit, or droplines from utility poles, pavement patches, previous locator markers, heating oil tanks, utility vaults, and sewer lateral cleanouts must be considered.

d. Include pavement restoration details (as needed) according to this policy. This includes repair of borehole entry pits and potholes.

3.8.14.2 Drilling Fluid Handling

The trenchless technology contractor must contain, handle, and dispose of drilling fluids in accordance industry and Oregon Department of Environmental Quality standards. Excess drilling fluid must be confined in a containment pit at the entry and exit locations until recycled or removed from the site. Precautions must be taken to insure that drilling fluid does not enter roadways, streams, municipal storm or sanitary sewer lines, and/or any other drainage system or body of water. Unintended surfacing of drilling fluid must be contained at the point of discharge and recycled or removed from the site. Drilling fluids that are not recycled and reused must be removed from the site and disposed at an approved disposal site. Any damage as a result of using Trenchless Technologies is the sole responsibility of the permittee.

3.8.14.3 Settlement/Heaving Monitoring

Trenchless technologies must be performed in a manner that will minimize the movement of the ground in front of, above, and surrounding the boring operation; and will minimize disturbance of the surface above and in the vicinity of the boring. The applicant must be responsible for the repair to City infrastructure resulting from heave or settlement caused by the use of the trenchless technology. All operations must stop immediately whenever a vertical change in elevation of ½-inch or more, or any surface disruption is observed. The permittee must then immediately report the amount of settlement to the Engineering Inspector, Street Department or Utility Department.

3.8.14.4 Trenchless Technology Operations Guidelines

All construction work must be performed in accordance with City requirements and industry standards. The permittee must ensure that all cleanup and restoration is in compliance with the City requirements for right of way restoration. In some cases determined by the Department, the permittee will televise, in the presence of Department staff, the City stormwater and wastewater components within five feet parallel to boring activity or crossed by the boring activity.

3.8.14.5 Compliance

As part of the notice of noncompliance, the City Engineer will include a notice to comply within five (5) working days or all future permits may be denied until the problems have been corrected. A meeting must be arranged with the City Engineer and a plan of action to prevent future noncompliance must be presented before issuance of any new permits.

Noncompliance Activities include:

a. Failure to obtain a permit.

b. Failure to maintain temporary patches.

c. Failure to make permanent repairs.

d. Failure to make emergency repairs.

e. Failure to make warranty repairs.

f. Failure to inform the City of asphalt completion date.

g. Failure to follow traffic control measures, as required.

h. Failure to meet specified timeline for any repairs.

SECTION 2-4

Sanitary Sewer Systems

Table of Contents

4.0 Sanitary Sewer Systems 3
4.1 Sewer Main 4
4.1.1 Depth 5
4.1.2 Minimum Diameter 5
4.1.3 Flow Calculation 5
4.1.4 Peak Factor (Domestic Flows Only) 7
4.1.5 Line Diameter and Velocity 7
4.1.6 Minimum Grade (Gravity) 7
4.1.7 Inverted Siphons 8
4.1.8 Flows in Pressure Sewers 8
4.1.9 Minimum Velocity 8
4.1.10 Maximum Velocity 8
4.1.11 Pressure Sewer Appurtenances 8
4.1.12 Waterline Crossings 8
4.1.13 Marking Tape and Locate Wire 9
4.1.14 Materials 9
4.1.15 Construction 10
4.1.16 Septic System and Municipal Sewer Extensions 10
4.1.17 Sewer System Extension Requirements 10
4.2 Manholes (Gravity) 11
4.2.1 Manhole Placement 12
4.2.2 Manholes (Pressure to Gravity Sewer) 12
4.2.3 Pressure Sewer Manholes 12
4.3 Sewer Services 12
4.3.1 Cleanouts 13
4.3.2 Sample Manhole 13
4.3.3 Sample Manholes on Pressure Sewer Systems 14
4.4 Sewage Pump Station Design 14
4.4.1 Wetwells 15
4.4.2 Pumps 17
4.4.3 Reliability and Redundancy 18

4.4.4 Telemetry and SCADA 18
4.4.5 Pump Control Panels 19
4.4.6 Electrical Enclosure 19
4.4.7 Hydrogen Sulfide Protection 21
4.4.8 Station Access 21
4.4.9 Station Fencing 21
4.4.10 Force Main Cleanout 22
4.4.11 Flow Metering 22
4.4.12 Bypass System 22
4.4.13 Safety Systems 22
4.4.14 Lift Station Standards 22

4.0 Sanitary Sewer Systems

Minimum design standards for sewer facilities are defined by the Oregon Department of Environmental Quality (DEQ) regulations as detailed in the appropriate Oregon Administrative Rules (OAR), Division 52. City of Bend Design Standards may be more stringent. In cases where the City of Bend Standards are different from the requirements specified by DEQ, the City of Bend Design Standards will be used. In cases where the City of Bend lacks a design standard, designers shall refer to OAR Division 52, Appendix A – Sewer Pipelines, and OAR Division 52, Appendix B – Raw Sewage Lift Stations, for detailed criteria.

The City of Bend requires gravity sewers. The City has made this requirement due to the expense of long term operational and maintenance costs associated with non-gravity sewer systems. This has been evaluated in the City's Collection System Master Plan (CSMP) and will continue to be evaluated in future updates of the CSMP. In places where a gravity solution is not possible, two solutions exist, pressure sewers, and a regional pump station with force main. Regional pump stations will be determined through the City's CSMP. Where a regional pump station is defined in the CSMP, all sewer flowing to the wet well will be by gravity. No pumping from one pump station to another pump station will be allowed. In addition, no lines or pump stations will be allowed to connect to the discharge line (force main) of any City owned pump station, until the first manhole at which force main line becomes a gravity flow line.

Pressure sewers may be proposed as an alternative. Pressure sewers are defined as an area where each lot is served with a privately owned, operated, and maintained sewer pump that feeds to a pressure line in the public right of way. No City owned or operated pump stations will be connected to a pressure sewer system. Each pressure sewer will be evaluated on a case by case basis by the City Engineer or designee. Pressure sewers are not allowed to connect to the discharge line of any City owned pump station and the City is only responsible for the main line that individual pressure pumps connect to. Multiple lots are not allowed to be served by a single pump station on a pressure sewer system, therefore each lot is required to have its own privately owned and operated pressure pump. The City is not responsible for any maintenance or operation of any privately owned pump station. When determining if a gravity system is not possible, the City will consider the long term operational and maintenance costs associated with any pressure sewer solution.

Additional flow into the City sewer system is not permitted where the system has no capacity. Capacity is defined as having the ability to adequately convey additional sewer flow during peak flow periods without violating criteria for surcharge, wet well capacity, or velocity. Distance from a municipal sewer line that has capacity is not a limitation on providing service. If, and only if, the City lacks capacity to provide sewer service to any development, the property owner can elect to consider on-site treatment and disposal for interim sewer needs until city sewer capacity is available. On-site treatment includes, but is not necessarily limited to, traditional septic tanks and leach fields or advanced treatment systems such as membrane technology. The process selected for treatment must be approved by the City of Bend, Deschutes County and DEQ, and shall comply with local,

state and federal laws and regulations. On-site treatment is allowed only after the City Engineer determines in writing that the City's sewer system lacks capacity to provide sewer when the property owner needs the service.

Any system that is designed to treat and dispose of sewer on-site must be designed to be connected to City sewer within 12 months of sewer system capacity becoming available, as determined by the City Engineer. The City Engineer can extend the 12-month connection requirement to a date or event certain, based on the performance of the on-site system, the anticipated lifespan of the on-site system, the investment in the on-site system and/or other relevant factors. In addition, any on-site treatment system owner will be required to enter into an agreement with the City that clearly identifies the owner's responsibility to maintain and operate the facility. The agreement will also provide that the City is not required to maintain or operate these systems and that should they fail, the land owner is responsible for any necessary repairs or requirements to satisfy State and Federal law even if the laws have been amended since contract initiation with the City. Any federal and/or state permits to operate an on-site system shall be included as an attachment to the agreement. The agreement shall be recorded against the subject property and shall remain in effect even if the property is transferred. The City may elect that a trust, contract to operate the system, or similar permanent financial mechanism, be established to cover repair and maintenance costs for the system to remain in compliance for perpetuity.

At the time that the City develops sewer capacity to serve a site with an on-site system, the City can require the owner to connect to the City's collection system, per the Bend Development Code, if it is located within 300 feet of any property line, or as required under OAR 340-071-0160. Unless the connection requirement has been extended as provided above, this connection shall occur within 12 months of capacity availability. The expense of such connection will be the responsibility of the property owner. All applicable connection fees, including system development charges, shall be paid upon connection to the municipal sewer system.

Approval for use of any alternative to gravity sewer shall be requested through the waiver process identified in Part I Section 2 Change Process.

All design calculations and studies of wastewater conveyance systems shall be submitted in an organized, legible, and professional form for review. These calculations, bearing the signature and stamp of a registered professional engineer, shall also include a thorough list of assumptions used in making the calculations. Submittals that are not legible, poorly organized, are inaccurate in the assumptions for the calculations, or are otherwise not in accordance with submittal requirements will be returned to the applicant for correction and re-submittal. Any work done on City sewer lines requires a Right of Way (ROW) permit.

4.1 Sewer Main

Sewer facilities shall be designed using alignments in public rights-of-way. Sanitary sewers shall be located as close to the roadway centerline as possible or centered within the right-of-way when no roadway exists. Sewers on curved roadways may vary from the centerline to minimize the use of manholes; however, the manholes themselves shall be located as close to the roadway centerline as possible. On narrow streets where locating the manhole on the center line of the roadway would force a water line in the same

roadway to be located outside the paved area or within close proximity to the curb line, the manholes shall be located as close to six (6) feet from the roadway centerline as possible.

All sewer improvements shall terminate at a sewer manhole. Stubbing sewer pipe for future extension will be permitted for approved multi-phased, master planned developments only where approved by the City Engineer.

Sewer shall maintain a minimum 10 foot horizontal separation from all water mains and water services. Franchise utilities shall maintain 2 feet horizontal separation and 12 inches vertical from sewer services and 10 feet horizontal separation from sewer mains. Six inch vertical separation from franchise utilities will be granted on a case by case basis.

Ninety degree fittings for sewer mains are not permitted, unless otherwise specified.

Sewer mains within private property, outside City of Bend right of way, shall be within a recorded sewer easement not less than 20 feet wide, with the pipe centered in the easement. Additional easement width may be required as determined by sewer depth and topographic conditions, as determined by the City Engineer.

Sewer mains that are unused shall be removed from the right of way. Sewer mains within City sewer easement, on private property, are preferred to be removed but can be abandoned in place, with approval from the City Engineer, provided the sewer easement is extinguished.

4.1.1 Depth

Minimum cover from finished grade to the outside top of the pipe for all sewer lines except sewer services shall be 36-inches. If conditions do not allow for a 36-inch depth consideration will be given from the City of Bend on a case-by-case basis.

4.1.2 Minimum Diameter

For gravity sewer, the minimum inside diameter shall be 8 inches, unless otherwise approved by the City Engineer. Minimum size for pressure collection system lines shall be 4 inches, unless otherwise approved by the City Engineer.

4.1.3 Flow Calculation

Average sanitary sewage flows shall be calculated using the most current land use zoning, and applying the unit rates shown in Table 4-1.

Flows generated by unusual land uses such as institutional or heavy industrial shall be based on actual (preferred) or estimated water consumption records. Estimates must be based on either an industry standard, or water consumption from a similar use.

Projected flows for a development are based on the Collection Sewer Master Plan (CSMP) and Equivalent Dwelling Units (EDUs). Any subdivision building or proposing a community swimming pool that is connected to a sewer lift station shall be required to provide flow calculations and general information pertaining to volumes being discharged into the City's collection system for cleaning purposes. Additionally, there shall be a requirement to

mandate this procedure being done during off peak hours. Furthermore, the pool maintenance staff shall be required to notify the City Collections staff prior to performing this work.

TABLE 4-1

Basis for Sanitary Sewage Flow Estimation

Land Use	**Average Daily Flow**
Residential	130 Gallons / Unit / Day
Non-Residential	427 Gallons / Acre / Day
School	347 Gallons / Acre / Day
Medical District Overlay	490 Gallons / Acre / Day
OSU-Cascades	490 Gallons / Acres / Day
Central Business District	185 Gallons / Unit / Day

Equivalent Dwelling Unit Calculations for known site conditions
130 Gallons / EDU / Day

Residential Use	
Single Family Dwelling	1 EDU
Two Family or Duplex Unit	2 EDU
Multi-Family	0.8 EDU / unit

Institutional Use	
Schools	
Kindergarten	0.05 EDU / person
Elementary	0.08 EDU / person
Junior & Senior	0.10 EDU / person
College	0.15 EDU / student
Nursing Home	0.65 EDU / bed
Hospital	0.75 EDU / bed
Library	1 EDU

Commercial Use	
Retail	1.0 EDU for first 2,000 SF floor area 0.5 EDU / Each additional 2,000 SF
Service & Repair Shop	1.0 EDU for first 1,800 SF floor area 0.5 EDU / Each additional 18,000 SF
Bank & Office	1 EDU / 2,000 SF
Medical, Dental, Veterinary	1.0 EDU / 1,000 SF floor area
Restaurant	1.0 EDU / 600 SF
Automobile service station	2 EDU
Barber Shop	0.30 EDU / Chair
Beauty Shop	0.38 EDU / Chair
Industrial, Manufacturing, Beverage Processor & Commercial Warehouse	0.09 EDU / person
Commercial laundry	2.58 EDU / 1000 Gallons of water use
Laundromat	1 EDU / machine
Theater	0.009 EDU / seat
Parks with restroom	1 EDU
Stadium	2 EDU
Swimming Pool	6 EDU
Dry Cleaners	3.10 EDU / 1,000 SF floor area
Recreational Roller Rink, Dance Hall	0.27 EDU / 1,000 SF floor area
Spa & Athletic facilities	6.67 EDU / 1,000 SF floor area
Armory	1 EDU
Carwash	1.17 EDU / wash stall
Pet Grooming	0.67 EDU / 1,000 SF floor area
Motel, Dormitories	0.40 EDU / room

4.1.4 Peak Factor (Domestic Flows Only)

Sanitary sewage design flows are calculated by applying a peaking factor to the average daily flow. This is done by accumulating flows from the upper reaches of the system and multiplying the accumulated average daily flow at specific nodes.

Apply the following peaking factors to obtain the design peak flow at that point:

Average Domestic Flow	Peaking Factor
< 1.0 mgd	3.0
1.0 – 2.5 mgd	2.5
2.5 – 5.0 mgd	2.25
> 5.0 mgd	2.0

Peaking flows for large institutional, commercial, or heavy industrial point sources shall be determined by analysis by a qualified professional engineer and require approval by the City Engineer, or designee.

Flow calculations shall be based on Manning's equation using the following values for n:

Pipe Material	Mannings 'n'
PVC pipe	0.009
HDPE pipe	0.009

4.1.5 Line Diameter and Velocity

Line diameters shall be computed using the procedures above to calculate the peak flow and selecting a diameter that will flow eighty percent full at that peak design flow [sewage depth/inside diameter (d/D >= 0.8)]. For example:

- A 6-inch line @ 0.006 ft/ft minimum grade flowing half full = 97.5 gpm
- An 8-inch line @ 0.004 ft/ft minimum grade flowing half full = 171.5 gpm

Slopes and diameters for gravity sewers shall be designed to maintain a minimum velocity of 2-feet per second (fps) at the average daily flow rate. However, no design shall ever exceed 8 fps, to ensure the liquids do not surpass the solids.

4.1.6 Minimum Grade (Gravity)

Designers shall use the following minimum grades (based on PVC Manning's n=0.013, velocity 2 ft/sec at 50% flowing full). Reference OAR 340 Division 52 for additional information:

Pipe Inner Diameter (inches)	Slope (feet per 100 feet)
4	1.5 min, 2 typ
6	0.75
8	0.40
10*	0.25

12	0.19
16	0.14
18	0.11
21	0.09
24	0.08
30	0.06

* 10” sewer pipe will not be permitted with new construction unless otherwise approved by the City Engineer.

4.1.7 Inverted Siphons

Inverted siphons shall not be permitted. If there are no practical alternatives for gravity sewer service without a siphon the designer may request a waiver using the process described in PART I, SECTION 2 “Change Process.”

4.1.8 Flows in Pressure Sewers

Flow calculations for pressure systems shall be based on the Hazen and William’s equation using the following value for *C*:

Material	**C Value**
PVC	135

4.1.9 Minimum Velocity

Line diameters for pressure sewers and force mains shall be selected to maintain a minimum velocity of 3-ft/sec at the minimum pumping flow rate for variable flow pumps.

4.1.10 Maximum Velocity

Maximum velocity along any point in pressure sewers, including force mains, shall be 8-ft/sec.

4.1.11 Pressure Sewer Appurtenances

Pressure sewers and force mains shall be designed with a constant downstream elevation rise, with the discharge being the highest point in the line. Pumping downhill (the discharge elevation being lower than the pump elevation) is not allowed. Variable grades shall require a waiver as described in Part I, Section 2 “Change Process” for any pressure sewer of force main that is unable to achieve a constant downstream rise. In cases where a waiver is granted for maintaining a constant downstream rise, designers shall include air release/vacuum relief devices at high points and cleanout facilities on pressure sewer or force mains over 500-feet long.

All air or air/vacuum relief valves shall be provided with freeze protection including insulated enclosures and designed by a professional engineer. Designers shall assume -10 ^{0} F sustained outside temperature. Design calculations for air release valves shall be submitted with the plans.

4.1.12 Waterline Crossings

Sanitary sewer line and water line crossings shall be designed per OAR 333-061 and/or AWWA standards, whichever is most stringent.

When a sanitary sewer main or lateral crosses a water main or lateral, the bottom of the water line shall be 1.5 feet or more above the top of the sewer line, wherever possible. One full length of the water line shall be centered at the crossing.

Where the water line crosses over the sewer line with a clearance of less than 1.5 feet or where the water line crosses under the sewer line, the sewer line shall be constructed with AWWA C-900 PVC pressure pipe for one full length of pipe, centered at the crossing point (at a right angle with 10 feet on each side of the crossing water line) and be equipped with gasketed PVC couplings specifically designed for transition from gravity sewer pipe to PVC water pipe. In either of these cases, a written report of findings must be provided indicating the reasons of reducing the separation.

Minimum vertical pipe separation shall be 12 inches, with reduction to 6 inches vertical separation with approval from the City Engineer.

4.1.13 Marking Tape and Locate Wire

Marking tape will be minimum 2 inches wide, APWA green and stretchable to a minimum of seven times its original size.

Marking tape is required on all mains and laterals. The marking tape shall be installed 12 inches above the pipe.

In addition to the marking tape requirement described above, pressure and vacuum sewer mains shall be wrapped with marking tape a minimum of 4 wraps per 20 lineal feet of main.

A #12 minimum tracer locate wire shall be installed within a 1-inch conduit directly above vacuum and pressure sewer mains, centered on the main. Tracer wire is not required on gravity main installations. Tracer wire shall be installed directly above gravity, vacuum, and pressure sewer services per OSS 00445.11(e) and 0045.48. Tracer locate wire shall be tested for continuity prior to pipe burial.

Sewer Type	**Marking Tape**	**Tracer Wire**
Gravity Main	12 inches above	None
Gravity Lateral	12 inches above	Directly above lateral
Pressure Main	12 inches above and 4 wraps per 20 LF of main	Tracer wire within 1-inch conduit above main
Pressure Lateral	12 inches above	Directly above lateral
Vacuum Main	12 inches above and 4 wraps per 20 LF of main	Tracer wire within 1-inch conduit above main
Vacuum Lateral	12 inches above	Directly above lateral

4.1.14 Materials

Gravity sewer mains and services shall be constructed of ASTM D3034 PVC sewer pipe. Pressure main lines and force mains shall be Schedule 40 (under 4” pipe) or C900 pipe and have a minimum DR of 18. Vacuum mains shall be constructed of SDR 21 PVC.

4.1.15 Construction

Construction of a sewer in an unimproved street shall include bringing the street to subgrade elevation to ensure that adequate bury, depth of cover, and utility separation is acquired. The street must be fully improved within six months after sewer is installed. If the street cannot be improved within the six months after sewer is installed, a 14-foot wide 2" thick paved all weather access road, with a 6-inch base, or as approved by the City Engineer, shall be installed centered over the sewer line with 6' x 6' asphalt or concrete pad around manholes. If the access road requires a vehicle turn around, adequate space shall be included for an all-weather access road.

If the street is to be improved more than six months after construction approval, the designer shall require that the street be properly staked to the approved design prior to the commencement of sewer line construction.

4.1.16 Septic System and Municipal Sewer Extensions

OAR 340-071-0160 requires denial of a Construction, Installation, Alteration, and Repair Permit for a septic system serving:

- A single family dwelling or other establishment with a maximum daily sewage flow not exceeding 899 gallons if the nearest municipal sewer connection point is within 300 ft of the closest property line to be served.
- A proposed subdivision or group of two to five single family dwellings or other establishment with the equivalent projected daily sewage flow if the nearest municipal sewer connection point from the closest property line to be served is not further than 200 feet multiplied by the number of dwellings or dwelling equivalents.
- For proposed subdivisions or other developments with more than five single-family dwellings or equivalent flows, the City Engineer will determine municipal sewer availability.

Measurement of the sewer extension requirements shall be from the sewer point of connection, down the road centerline, to the nearest property corner of the property. Sewer extension shall be a minimum one stick of sewer pipe, or 20 feet, into beyond the property line.

The property owner will be required to incur all costs to design, permit and construct an extension of the public sewer system to serve the property unless other agreements and/or funding arrangements have been approved by the City. If it is determined that a property is not within sewer availability or other circumstances exist that would prohibit a connection as determined by the City Engineer, a Septic Authorization Form will be approved by the City to allow the use of a septic system.

4.1.17 Sewer System Extension Requirements

If a sewer extension is required as part of Section 4.1.16 for compliance with OAR 340-071-0160, the property owner shall be required to extend the City sewer main a distance sufficient to establish a standard perpendicular service connection into the property or 20 feet, whichever is greater.

For all other developments, sewer mains shall be required to be extended to and through the length of the property frontage.

4.2 Manholes (Gravity)

Manholes shall be located in a manner to provide unobstructed access for maintenance and inspection, to prevent stormwater infiltration, and to minimize the possibility of damage from vehicles or injury to pedestrians. Sewer mains shall be extended as necessary to place new manholes at street intersections. Manholes shall be located on pavement centerline, at intersections, with spacing limited to not more than 500-feet. When no intersection exists within the spacing requirements, manholes shall be located in the pavement centerline. On narrow streets where locating the manhole on the center line of the roadway would force a water line in the same roadway to be located outside the paved area or within close proximity to the curb line, the manholes shall be located as close to six (6) feet from the roadway centerline as possible.

Manholes shall not be located within 25 feet of street sag low points. At the end of cul-de-sacs, storm drainage is to be designed to prevent manhole placement adjacent to catch basins.

Manholes located on mains larger than 12 inches in diameter or at a pressure/gravity sewer intersection may be required to be lined for corrosion resistance. The manhole can either be a Xypex manhole, Armorock manhole, or equivalent approved by the City Engineer.

Manholes for all piping in excess of 12-inch diameter, or manholes that have three or more inverts must be 60-inch in diameter and use an eccentric cone configuration with the manhole opening located over a point opposite the outlet pipe. All other manholes shall be a minimum of 48-inch-diameter and use an eccentric cone configuration with the manhole opening located over a point opposite the outlet pipe.

Existing 48-inch-diameter manholes are not required to be replaced with 60-inch-diameter manholes when additional invert(s) are added. The existing and new inverts shall be separated by a minimum of 12 inches in all directions.

Each manhole shall be designed with a minimum fall through the invert of not less than 0.1-foot. Invert fall through manholes that divert flow more than 45 degrees or are 60-inch diameter shall have a fall through the invert of not less than 0.2-foot. At no time shall manholes direct flow more than 90 degrees, preferably less, unless at intersections with multiple incoming inverts.

For pipes that are larger than 8-inch diameter, internal invert drops are limited to not more than 2.0-foot differential between the invert in and the invert out. For pipes that are 8-inch diameter and smaller the internal invert drop is limited to 1.0-foot differential between the invert in and the invert out. The City encourages designs that avoid the use of external drops through the adjustment of the grade of the pipe entering the manhole. Where pipe slope cannot be adjusted because of excess sewer velocities, external drops are required on all manholes when the differential requirements stated here are exceeded.

4.2.1 Manhole Placement

Where manholes are adjacent to but outside paved right-of-way, a paved access pad sufficient for service equipment to operate without blocking the traveled way shall be constructed. Where manholes are away from paved right-of-way, a 14-foot wide 2" thick paved all weather access road, with a 6-inch base, or as approved by the City Engineer, shall be installed centered over the sewer line with 6' x 6' asphalt or concrete pad around manholes. This paved access road shall be a minimum of 14-feet in width. Support facilities such as, but not limited to, vehicle turnaround or fencing with a lockable gate may be required at certain manhole locations. These requirements will be at the determination of the City Engineer or designee.

Location of manhole frame and covers in a vehicle wheel track is not acceptable. Location of the center of manholes within 5-feet of the curb line is not acceptable. Location of manholes outside of paved areas is not acceptable.

4.2.2 Manholes (Pressure to Gravity Sewer)

Manholes shall be placed where pressure sewers connect to gravity main lines after the point at which the pressure line is in laminar non-pressurized flow. A minimum of one joint of gravity pipe shall be installed prior to the manhole. The joint of gravity pipe shall be installed at minimum grade, as practical.

4.2.3 Pressure Sewer Manholes

Manholes are required in all pressure sewers where cleanouts, air release, or vacuum relief devices are placed. Cleanout manholes shall not be more than 500-feet apart. As with gravity manholes, manholes shall be located on or near to pavement centerline.

4.3 Sewer Services

Sewer services shall be placed perpendicular to the main sewer whenever possible and shall not be connected into any manhole. All sewer services shall have tracer wire and marking tape installed in conformance to section 4.1.13.

Gravity sewer services are not to be less than 4-inches in diameter. All other gravity sewer services and all pressure sewer services shall be the appropriate diameter for the application as specified by the designer and approved by the City Engineer.

Ninety degree fittings for sewer services are not permitted, unless otherwise specified.

Sewer services shall have not less than 24-inches of cover at the property line. If the service crosses a roadside ditch, or any low area, 24-inches of clearance must be obtained at the crossing, measured for where solid compacted backfill was placed.

For all residential, commercial, industrial, or institutional parcels, each lot can only have a single service. On lots with multiple buildings, each building is required to have at least one service, but those services can only feed to a single service connected to a sewer main.

Sewer services that cross property lines are discouraged and require approval from the City of Bend Building official. Width of the recorded easement is to be determined at the time of sewer approval, typically 10 feet wide with service centered in the easement.

All unused or abandoned service pipes within the right of way shall be cut and capped at the main. The unused service pipe shall be completely removed within the right of way.

Sewer services are the ownership of the property owner they service. The property owner is responsible for the maintenance of the sewer service from the main into the property, including any private pumps required for pressure sewer systems.

Where properties have sewer service provide from a pressure sewer system, a check valve shall be installed on private property at the right of way line. Beyond the check valve an individual pump with sump shall be installed in conformance to the Oregon State Plumbing Code under a City plumbing permit. All private pumps are owned and maintained by the homeowner or homeowner group. No lots shall pump into a force main (a sewer main with a City pump station) without the approval from the City Engineer.

4.3.1 Cleanouts

Permanent cleanouts within the right of way are not acceptable on gravity mains unless approved by the City Engineer. Cleanouts are permitted on private property per the Oregon Specialty Plumbing Code.

4.3.2 Sample Manhole

Sample manholes must be located on private property, unless otherwise approved by the City Engineer. Sample manholes shall be located in a manner to provide complete accessibility, to prevent stormwater infiltration and to minimize the possibility of damage from vehicles or injury to pedestrians. Sample manholes shall be located away from traffic and parking. Sample manhole placement shall allow easy access 24 hours per day. Fences or walls shall never be erected around the manhole blocking access. Where sample manholes are constructed in unpaved areas, a 6’ x 6’ x 6” thick concrete pad shall be constructed around the rim.

Sample manholes shall be constructed on all commercial and industrial properties. Where there are multiple buildings on a site, the City Engineer may require each building’s service lateral to have a sample manhole. Sample manholes shall always be installed downstream of a grease trap or oil water separators, when applicable.

Sample manholes do not require sulfide resistant material. Drops between the inlet and outlet invert shall be 5% minimum or match existing pipe slope where installed on an existing service line.

When sample manholes are located on private property, the Building Department will inspect the sample manhole. The sample manhole will be inspected per Standard Drawing S-15 and Oregon Specialty Plumbing Code.

4.3.3 Sample Manholes on Pressure Sewer Systems

Sample manholes connected to pressure sewer systems shall be placed prior to the on-site pressure sewer manhole.

4.4 Sewage Pump Station Design

The City's policy is to install gravity sewer in all situations unless it can be demonstrated to the City that gravity cannot service an area. The City of Bend recognizes that there may be cases where a sewer pump station will be required due to topography or other reasons. In any case where a sewer pump station is being proposed, it needs to be verified in the most currently adopted Collections System Master Plan (CSMP) that it is also showing the need for a pump station in the proposed location. There may be times where the CSMP does not reflect the desired location of a pump station in which case a waiver must be requested through the waiver process in Part I, Section 2 "Change Process". In such cases where a sewer pump station is being requested through a waiver process, the designer should allow additional time for review. In no case will a pump station be allowed to connect to another force main or pressure sewer. Any pump station must have a dedicated force main that flows to a gravity manhole.

The City of Bend requires strict compliance with Oregon Revised Statute 672 for Professional Engineers. The professional design engineer must have had prior experience in designing similar systems. Unless otherwise indicated by the City, prior to the initiation of a study for any new pump station and/or sewer project, the Design Engineer shall submit qualifications for review, and approval by the City.

Design of pressure sewer facilities and sewage pumping stations shall conform to the City of Bend Standards and Specifications and the Oregon Department of Environmental Quality (DEQ) regulations as detailed in the appropriate Oregon Administrative Rules (OAR), Division 52. Designers shall refer OAR Appendix B – Raw Sewage Lift Stations, for detailed criteria.

All raw sewage pump stations shall use submersible pumps in the wet well. In some cases, immersible pumps designed in a wet/dry well configuration will be allowed. This will be determined at pre-design.

All pump station mechanical equipment shall be provided by a single provider, including the pumps, base, guide rails, etc. All electrical devices must be UL or CSA approved, and meet all NFPA and NEC codes and NFPA codes regarding classified areas. All pump stations are subject to submittal to DEQ for approval.

City maintained pump stations shall be located in dedicated tracts of land owned by the City or, when approved by the City Engineer, in a City of Bend easement. A hydrant shall be located at the frontage of the tracts / easement for cleaning the pump station wet well.

The Design Engineer shall provide pump operating data, including pump curve, total dynamic head and calculations used to derive peak flow rate.

A pre-design meeting shall be scheduled with the City. At the pre-design meeting the City will provide a list of requirements for the pump station improvements. The Design Engineer shall come to the meeting with the design service area and anticipate flow rate information development by the service area. Prior to beginning the final design, the Design Engineer shall submit a pre-design report to the City for review, covering all aspects of the Pump Station Design, as described in the pre-design meeting and herein.

The following additional guidelines supplement the Oregon Standards.

4.4.1 Wetwells

All wetwells, shall be concrete epoxy lined self-cleaning design per ASTM standards. A precast, circular wetwell design is required unless otherwise approved by the City Engineer. Pre-packaged pump stations with fiber glass wet wells will be reviewed on a case by case basis, complying with Flyght standards or approved equal.. Joints shall be keyed rubber ring per ASTM 443 with mastic gaskets and be water proof. A leak test shall be conducted by the Design Engineer and witnessed by the City Inspectors with written documentation of the test provided.

Floors shall be sloped to drain to pump at a minimum of 45 degrees.

The top of the wetwell and associated valve pit shall be flush with the surrounding pavement. Top deck and lid of wetwell and valve pit shall be flush with the surrounding pavement/grade with properly sized 316 Stainless Steel gooseneck vent installed in top of wetwell. (See 3-13.)

The invert of the inlet to the wetwell will be located in such a manner to reduce the turbulence in the wetwell. This may require the pipe be sloped outside the wetwell from the normal pipe depth with maximum slope of 22.5 percent.

The Design Engineer shall calculate the buoyancy potential for the wetwell assuming ground water level at the ground surface and an empty wetwell. A factor of safety of a minimum of 1.25 shall be used in the calculation and as deemed appropriate by the Design Engineer and approved by the City. Invert of inlet above operating flow level and designed to reduce turbulence.

4.4.1.1 Working Capacity

The minimum working capacity of the wetwell, from pump off to pumps on, shall be determined at pre-design based upon estimated peak inflow rates and pump manufacturers recommendations.

4.4.1.2 Emergency Capacity

The emergency capacity of a wet well may be required under certain circumstances and shall be reviewed and approved by the City on a case by case basis and the City shall provide design criteria that must be met. This will be determined at pre-design.

4.4.1.3 Design Flow

Pumping stations and related components shall be designed to discharge Peak Hourly Flow (PHF), Final design PHF shall be reviewed and approved by the City. The PHF shall be calculated using a combination of the following parameters:

- Average Residential Per Capita Flow per the City of Bend Collection System Master Plan.
- Infiltration and Inflow Allowance per the City of Bend Collection System Master Plan.
- Peak Hour (Diurnal) Flow Peaking Factor per the City of Bend Collection System Master Plan.
- Non-Residential Flow Factors per the City of Bend Collection System Master Plan.

- Seasonal Peaking Factors shall be applied per the City of Bend Collection System Master Plan.

The Design Engineer shall review the City's Collection System Master Plan and DEQ guidelines for pump stations and develop the flow calculations for review and approval by the City of Bend in the Preliminary Design Report.

4.4.1.4 Design Life

Wetwells shall be designed and sized to accommodate for the build-out within the identified basin(s) contributing to the pump station, unless otherwise approved by the City. Pumps, motors, electrical systems and related components shall be designed and sized for a minimum 20-year service life, unless otherwise approved or required by the City. Structures shall be capable of a minimum 75-year design life.

4.4.1.5 Wetwell Wiring

Submersible pump wetwells shall incorporate an electrical section for access to electrical boxes and seal-offs. The electrical section shall have a separate 30-inch square hatch, a poured concrete bottom, a minimum of 18-inches deep, and be open to the wetwell. This area shall use explosion-proof seals and junction boxes supported and fastened to the floor directly under the hatch opening.

All pump cords and float cords shall run from the float suspension rod to the electrical section of the wetwell vault. Pump power lines and float control lines shall terminate into copper-free, explosion-proof junction boxes. Boxes are to be traffic rated and approved by the City.

Acceptable products are:

- Utility Vault Hatch: Cat. # 3030 P, or
- Utility Vault Hatch: Cat. # 3030 AL

The invert of the lowest influent pipe to the wetwell will enter no more than 1-foot above the lead pump's on setting, to reduce the turbulence in the wetwell. This may require that the pipe be sloped outside the wetwell from the normal pipe depth with maximum slope of 22.5°. The emergency storage time in the wetwell may be calculated to the invert elevation of the influent pipe in the last manhole prior to the sloped section.

4.4.1.6 Level Control

Level control shall be provided by the use of a submersible level transducer or radar sensor located inside the wet well. A redundant level sensor shall be provided.

One High-High level sensing float-switch type alarm shall be provided in the wetwell to provide backup pump start control and alarming in the event the primary level sensors become inoperable. This float switch will start the lead pump to insure the contents of the wetwell are pumped out in the event of a primary level control failure.

Float controls shall be utilized as a redundant high and low alarm device and pump control capable of by-passing the control circuit, unless as determined by the City of Bend. The high level PLC and redundant float set point shall initiate the operation of the standby pump along with the high level alarm. Separate contacts shall be used for the alarm and operational points. Float controls shall be intrinsically safe and motor starters shall be NEMA rated. Float switches shall be of a weighted design, which do not require tying off

in order to tip and operate properly. Floats shall be individually hung, at a distance no less than 8-inches apart from each other, from stainless steel uni-strut fastened to the concrete with stainless steel hardware and installed in such a manner as not to interfere with pulling pumps for maintenance and free of water turbulence.(see float suspension detail). Floats and other level control shall be intrinsically safe, run in their own conduit system, and terminate in their own explosion proof J-box. All clamps, straps, fasteners and other hardware shall be stainless steel

All applicable NEC and NFPA 820 requirements for explosive environments must be utilized.

4.4.1.7 Hardware

All hardware and fasteners inside the wetwell shall be stainless steel. Hatch assembly shall align with the slide rail system for pump removal. Rails shall be one piece, solid stainless steel construction of a two rail design. Wetwell and valve pit access lid shall be as manufactured by Utility Vault 4872AL 4-feet x 6-feet Double Door Aluminum suitable for H20 loading with no cross bar (no manhole lids).

All wet well hatches will include an OSHA approved fall protection grating. It will be a minimum of T-316 stainless steel, two piece, with a latch to hold it in the open position. Suggested manufacturers are Flyght and Halliday Products. All hatches shall be full traffic rated suitable for H20 loading.

4.4.2 Pumps

All pump stations that are to be owned and maintained by the City of Bend shall be of immersible motor construction, unless otherwise determined by the City of Bend. Pumps shall be designed for continuous operating service for pumping raw, unscreened sewage, constructed to meet the intended service

The pumps shall be mounted on a 316 stainless steel guide rail lift out system provided by the manufacturer. The pump shall meet NFPA 820 and NEC requirements, be explosion proof, and shall be capable of passing a minimum 3-inch solid diameter sphere. Three phase services are to be specified. Single phase power may only be specified for pumps with a maximum power of five (5) horsepower only as explicitly approved by the City.

The pumps shall be supplied by a distributor authorized to service them throughout warranty period and afterwards. The pumps shall be warranted by the manufacturer for a minimum period of two years after the City has accepted them into service. Certified pump tests shall be provided by the manufacturer for each pump provided.

All wetted parts shall be compatible and suitable for application with municipal raw wastewater and the corrosive environment associated with a typical municipal pump station, in addition to the specific materials requirements specified herein.

Each pump shall be provided with a stainless steel, stamped nameplate indicating the serial number, rated head and flow, impellor size, pump speed and manufacturer's name and model number.

Compatibility-Pumps and pump station equipment shall be selected considering compatibility with other City Pump Stations and final selections shall meet the approval of the City of Bend.

The Design Engineer shall provide system curves that indicate the required pump operating conditions. System curves shall be developed for static head and dynamic losses due to suction and discharge piping, valving, and other sources of head loss.

The Design Engineer shall select pump (s) that operate under the determined system curve conditions with the highest efficiency possible. Pumps selected shall operate under the manufacturer's recommended operating conditions and limitations. All system and pump curve information shall be submitted for approval by the City Engineer.

4.4.2.1 Pump Types

Immersible pumps shall be supplied by one of the following approved manufacturers:

1. Flyght (N-type impellor), or
2. Approved equal.

Self-priming pump stations are not permitted.

4.4.3 Reliability and Redundancy

All pump stations shall be designed to meet the EPA Class I reliability requirements, which includes pump redundancy, standby power provisions, and a telemetry/SCADA system.

Pump redundancy shall mean adequate pump capacity to discharge the PHF with one unit out of service. All pump stations shall be constructed with a three pump system (minimum 2 pumps operating alternately and an additional pump as an installed backup) unless otherwise determined by the City of Bend. All installed pumps shall be capable of assuming a lead, lag, or standby role

Pumping facilities shall be equipped with a backup control system, which shall operate the pumps in the event the primary power and/or control system fails.

Standby power and telemetry systems shall be provided per these standards.

All new, expanded, or upgraded pump stations shall be supplied with a permanently installed onsite generator with a functional automatic transfer switch with the capacity to operate all pumps, controls, lights and any other necessary equipment to operate the station simultaneously. The backup generator shall automatically transfer during loss of power and automatically re-transfer upon resumption of electrical utility power. The generator set shall be equipped with outputs capable of integrating pertinent information via the City of Bend SCADA system. Those outputs shall be, but are not limited to: generator run, generator low temperature, generator low oil pressure, generator failed to start, amperage, and voltage. The backup generators shall be fueled by natural gas unless otherwise approved by the City of Bend.

Allowable Generator Manufacturers:

1. Katolight
2. Kohler,
3. Or approved equal

4.4.4 Telemetry and SCADA

The telemetry system shall be designed, installed and approved by the City of Bend. Ancillary telemetry systems may be required in addition to the standard data transmission telemetry. Additional hardware and software may be required as determined by the City.

Supervisory Control And Data Acquisition (SCADA) software may be required as determined by the City of Bend. The software shall be installed in a panel mounted Human Machine Interface (HMI). The HMI shall be industrial quality with a touchscreen view panel as approved by the City of Bend. Allen Bradley is currently the only HMI allowed in the City of Bend.

4.4.5 Pump Control Panels

Pump panel shall be manufactured using discrete components by a nationally recognized manufacturer. Pump operation shall be controlled by an Allen Bradley Programmable Logic Controller (PLC) unless otherwise determined by the City of Bend. The PLC shall be programmed for alternating pumping sequences and utilizing the Lead, Lag, Standby concept. The PLC shall be capable of integration with the current City of Bend Utility SCADA system. The PLC shall interface with an intrinsically safe level sensor that produces an isolated 4-20 mA signal for pump control. In all selected applications, redundant level controllers will be required with PLC programming to include operator selection and differential alarm settings.

Panels shall include hand, off, auto selector switches, alternating switch with lead selection capability, if applicable, phase failure/reversal relay, starter auxiliary contacts for telemetry use, elapsed time meters, and high level alarm contacts for telemetry. HOA switches, alternating switches, handles for pump breakers, branch and control circuit breaker, reset buttons, overtemp and seal lights and resets shall be operable from the exterior of the control panel door. All electrical power transfer switches shall be mounted externally to the control panel and inside the pump station enclosure. All wires shall be properly labeled; tie wrapped, and laid in wire way as to maintain a professional installation. Cut sheet for products along with computer generated wiring schematics, and equipment layout diagrams all properly labeled showing the entire system shall be approved through the permit process and submitted to Public Works prior to startup of the system. In addition, all operational, maintenance, warranty, and informational documentation including pump curve, electrical schematics, and pump information plate as provided by the manufacturer shall be supplied at start-up to the City.

All pump stations shall be designed for 3 phase power. All stations receiving 240 volt 3 phase line power will be wired so the high leg is on B phase at the first connection after the utility company connection, with clockwise rotation, wired and labeled according to the NEC. If the pumps require counterclockwise rotation, the change will be made at the pump starter. All 460 volt stations will be wired according to the NEC with clockwise rotation. If the rotation must be changed for the pumps, it will be changed at the pump starter.

Allowed Panel Manufacturers: Powers of Automatron, Renco, Pump Tech.

Circuit breaker and contactor permitted: Cutler Hammer, Square ”D”, General Electric.

4.4.6 Electrical Enclosure

All electrical devices must be UL or CSA approved, meet NEC codes and NFPA codes regarding classified areas. All pump stations are subject to submittal to D.E.Q. for approval. All electrical components (Pump panel, telemetry, circuit breaker panel, transfer switches, etc.) shall be installed in a free standing, floor mounted, 2 door, and Nema 12 enclosure. The size shall be a minimum of 72-inches x 72-inches x 20-inches deep and shall include a back panel to mount equipment on. A paddle lockable hasp shall be mounted above the exterior handle. The panel shall be on 12-inch high floor stands and

securely mounted to a poured concrete base, which extends at least 12-inches past the edge of the panel on all sides.

The panel shall be located outside of the Class 1 Division 2 area as defined by NFPA 820. In no case shall the panel be less than 60-inches from any wetwell hatch or electrical hatch opening and 60-inches from any wetwell vent.

Acceptable Products:

1. Hoffman A-727220ULP Enclosure,
2. Hoffman A-72P72 Back Panel,
3. Or approved equal.

The enclosure shall contain a 200 cfm; thermostatically controlled cooling fan located in the lower right or left hand sidewall. A seven-inch by seven-inch (7" x 7") louvered plate with filter shall be located on the upper wall opposite the cooling fan. There shall also be an 800-watt, 120-volt electric fan forced heater with separate thermostat. Baseboard and residential can type heaters shall not be acceptable, nor shall open unguarded axial type cooling fans. A toggle switch controlled porcelain keyless fixture with 100-watt bulb installed on the upper back wall shall be included along with a 15-amp GFI receptacle. Next to the outlet box shall be a 4-Square steel box with raised steel switch cover for use as a telemetry power switch. The power source for the telemetry switch shall be fed from the pump panel control circuit.

All this and other utilization and distribution equipment including air compressors, light and heat shall be wired from or to a source other than the pump control panel, control circuit and/or control transformer. This will require adding a small 6 or 8 circuit panel tapped off the load side of the pump control panel disconnecting. In the case of a 480-volt pump station a properly sized step down transformer with disconnects shall be required.

All these components shall be wired in EMT conduit, rigid steel conduit, or liquid tight metallic flex.

Acceptable Products:

1. Cooling fan Hoffman A-PA6AXFN
2. Louver / filter Hoffman A-VX66, AFLT66
3. Heater Hoffman D-AH8001B
4. Light Lithonia 9875
5. Electrical panels may be required to be enclosed in a pump station building as determined by the type and quantity of the equipment used.

4.4.6.1 Standby Generator Receptacle

The pump station panel enclosure shall include a Crouse Hinds reverse contact (S22) generator receptacle with back box. Sized appropriately for the pumps and station and wired through a manual transfer switch in such a manner as to back up power to the entire station using the City of Bend standard generator set. The receptacle shall be mounted no less than 36-inches above grade and shall be securely fastened to the enclosure using minimum 5/16-inch diameter bolts. The wiring configuration must conform to the City standard.

The receptacle shall be installed as an additional electrical backup system and shall be installed in accordance with all applicable codes.

Acceptable products:

1. 240 Volt Crouse Hinds, reverse service, 200 Amp AREA 204126S22
2. Appleton AR 200 44 RS
3. lt; Appleton 200 Amp 22 Deg. Turn, Reverse Service, AP 200 44 P4RS

4.4.7 Hydrogen Sulfide Protection

Each station may require a chemical treatment basin per City specification, but each odor/ corrosion control system will be approved for the individual station. Odor containment systems may include valves, tanks, pumps, piping, containment, secondary containment, and other pertinent appurtenances as required by the City of Bend.

4.4.8 Station Access

All pump stations shall be designed to allow for ease of access for equipment and operation of equipment.

4.4.8.1 Equipment Access

Design drawings and specifications shall incorporate all applicable and reasonable provisions to maximize efficient removal, replacement and maintenance of all equipment. This includes but is not limited to adequate clearances, sufficient anchorage, hoists, hatches and platforms as necessary.

4.4.8.2 Site Access

Site Access shall be provided such that a maintenance vehicle and/or vactor truck may be parked off-road and on the pump station site without hindering area traffic. Paved access shall be provided to the station at all times. The access shall allow a vehicle, including the City's Jet Rodder Combination Truck (20-foot W.B. 10-foot overhang, front/back) to park over the wetwell without blocking any traffic lanes or pedestrian walkways. Access shall be level as possible, but shaped to drain away from wetwell. All paving shall be shown on construction plans and approved by the Engineering Division prior to construction. A 10 foot clear space shall be required between existing, proposed, or future equipment (including 12 foot by 20 foot designated generator area) and fencing on all sides of the pump station.

4.4.9 Station Fencing

The stations shall be enclosed with a chain link fence with 16-foot wide gate with sight screening vinyl slats. There shall be a double gate at least 16 feet wide. There shall be sufficient room inside the fence for a concrete pad 6 feet wide and 9 feet long next to the wetwell and electrical panel. Each installation shall be reviewed and approved on an individual basis. All gates shall be supported by wheels; alternate fencing materials will be considered on an individual basis. Fencing shall be at the tract property line and there shall be a minimum 10 foot clear space between the fence line and any existing, proposed or future pump station equipment/structures. Alternate fences shall be considered if maintained by adjacent HOA.

4.4.10 Force Main Cleanout

Each station shall have a pig launch with a 1-inch ball valve with a brass swivel fitting with brass plug mounted in the center of the flange to permit the attachment of jet rodder hose. There shall be a plug valve on the discharge side of the pig launch.

4.4.11 Flow Metering

Each sewer pump station will have an inline-electro magnetic flowmeter installed on the station discharge main in the vault. There must be no moving parts, or obstruction in the flow. The flowmeter can be used A.C. or D.C. model signal, using a 120-volt A.C. power source. The meter must be designed for and approved for wastewater use with an accuracy of 1%. The meter must be programmable with a built-in keypad, with data storage. The transmitter is to be mounted in the station enclosure. There must be 4-20 mA inputs and outputs, with an interface capable of communicating with the City's RTUs and/or SCADA system. The meter must be installed according to the manufacturers specifications with the O and M manual supplied to the City. All necessary conduit and wires for electrical power and communications must be installed and connected. A downstream plug valve must be installed downstream from the meter at a distance required by the manufacturer of the meter for accurate operation and a properly sized spool piece of the same piping material must be provided to facilitate removal of the flow meter.

Acceptable manufacturers are: Krohne, Endress & Hauser, Yokogawa, or approved equal

4.4.12 Bypass System

Each pumping station shall be equipped with a sewage bypass system unless otherwise determined by the City. The Bypass System shall consist of a manhole prior to the pumping station wet well and a discharge port located on the discharge pressure pipe. The manhole shall be readily accessible and located on the site of the pumping station. No manhole will be allowed under cover or inside any of the on-site buildings. The discharge port shall be installed on the discharge pipe immediately after exiting the pumping station. The discharge port shall be readily accessible and on the same site as the pumping station. It shall be constructed of 6-inch ductile iron and extended vertically 12-inches above grade. A 6-inch plug valve shall be installed with a 4" x 6" cast iron, flanged concentric reducer and a 4-inch aluminum camlock fitting with a lockable cover.

4.4.13 Safety Systems

Each pumping station must conform to all applicable OSHA safety regulations. Additional safety devices such as fall protection and atmosphere monitoring devices may be required as determined by the City of Bend.

4.4.14 Lift Station Standards

An example plan set for lift station design is provided as Part VII – Appendix B – Example Lift Station Plan Set.

SECTION 2-5

Water

Table of Contents

5.0 Water 2
5.1 Main Line 2
5.1.1 Minimum Size 2
5.1.2 Marking Tape 2
5.1.3 Materials 3
5.1.4 Location 3
5.1.5 Velocities 3
5.1.6 Pressures and Flow Calculations 4
5.1.7 Bends and Joint Deflection 4
5.1.8 Thrust and Restrained Joints 5
5.1.9 Pressure Reducing Vaults 5
5.2 Service Lines 5
5.2.1 Services Off of Fire Lines 6
5.3 Valves 7
5.3.1 Valve Location 7
5.3.2 Valve Types 7
5.3.3 Pressure Reducing Valves 7
5.3.4 Blow-Offs 7
5.4 All-Weather Access 8
5.5 Meters 8
5.5.1 Automatic Meter Reading Systems 8
5.5.2 Standard Meters 9
5.5.3 Vaults and Meter Boxes, Including Insulation 9
5.6 Fire Services, Flows and Hydrants 9
5.6.1 Fire Flow Requirements 10
5.6.2 Fire Service Lines 11
5.6.3 Hydrants General 11
5.6.4 Location 11
5.6.5 Concrete Pad 12

5.0 Water

Materials and procedures for water facilities shall conform to the most current Oregon Standard Specifications for Construction as supplemented and/or modified by the City of Bend's Special Provisions. The Oregon Health Division Administrative Rules, and American Water Works Association (AWWA) standards, may also be referenced.

Designers shall note that some areas within the City limits are served by private water utilities (Roats and Avion). The private water utilities shall be shown on the infrastructure plans. The design standards require these private utilities apply for a right of way permit (Tier II or Tier III/Infrastructure depending on work being performed) when water infrastructure is being installed for ultimate ownership by the private utility and requires their approval.

All design elements below are minimum requirements. Any exception will require a waiver request as outlined in Part I, Section 2 "Change Process".

5.1 Main Line

The City's water distribution system is designed to meet peak hour demands and all fire flow requirements with minimal impacts to City of Bend water customers. All new elements added to the existing system need to be designed with these requirements in mind. Where new water infrastructure is being constructed, water systems shall be looped into existing water pipes in the project vicinity or as directed by the City Engineer.

City of Bend Water mains and services in the City's right of way that are not in use shall be removed completely. Where water mains and services within a City utility easement (outside of public right of way) on private property is to be decommissioned, it is preferred to have all pipes removed, however with the City Engineer's approval, they can be abandoned in place when the easement is extinguished and the City releases liability of the abandoned pipeline to the property owner.

City of Bend water pipe shall be constructed in a trench with Class B compacted backfill within the pipe zone in conformance with the standard drawings. Water mains shall not be constructed on blocks.

5.1.1 Minimum Size

The minimum pipeline diameter for distribution mainlines shall be 8-inches. Distribution mains shall be either 8 inches or 12 inches in diameter. Transmission mains shall be minimum 16 inches in diameter. Fire hydrant lines shall be 6-inches in diameter and have a 400-foot maximum running length. All mainline extensions and system designs shall meet required minimum fire flow for that zoning (See Table 5.6.1).

5.1.2 Marking Tape

Marking tape is required on all mains. Marking tape must be minimum 2 inches wide, APWA blue, and stretchable to a minimum of seven times its original size. The marking tape must be installed at the top of the pipe zone material, 12 inches minimum above the main, centered on the main. Refer to Standard Drawing W-1.

5.1.3 Materials

Ductile iron is the only material approved for construction of water lines and fittings in the City of Bend system. Adequate controls and protective equipment shall be provided so that the level of pressure rise resulting from surges and other variations from normal operations shall not exceed the internal design pressure at any point in the piping system and equipment by more than ten percent. Surge analysis calculations shall be provided on request for City review and shall be included with any design submittals.

Minimum class requirements:

Pipe Diameter (I.D.)	Class
6-inches to 12-inches	52
16-inch and larger	50

5.1.4 Location

All water lines must be located in public right-of-way, unless otherwise approved by the City Engineer. Public easements across private property will not be allowed unless approved by the City Engineer. Any public water lines (domestic water services, fire services, or private water mains) entering into private property requires premise isolation (backflow devices) at the right of way. The location of the premise isolation shall be on private property, unless otherwise approved by the City Engineer. Backflow devices will be permitted within a building on a case-by-case basis.

Water mains shall be located 10-feet from roadway centerline. Water mains shall be offset a minimum 6-feet from the centerline where located on streets 32-feet or less in width (curb to curb). Water mains shall be constructed a minimum 3-feet from the curb.

A 10-foot minimum horizontal separation from sanitary sewer, storm and underground utilities shall be maintained. At sewer and storm crossings, the bottom of the water line shall be 1.5-feet or more above the top of the sewer line. Where 1.5-feet vertical separation cannot be obtained at the crossing, the sewer/storm pipe at the crossing shall be constructed such that one full 20-foot stick of water pipe is centered at the crossing. Separation from sanitary sewer lines is established by Oregon Administrative Rule (OAR) 333-061-0050. Utility crossings are to maintain a typical 12-inches vertical separation from all water crossings, with minimum 6-inch vertical separation permitted with City approval.

All water lines shall have a minimum of 36-inches of cover measured from the top of the outside pipe to the top of the roadway surface. Maximum depth of a water main shall not exceed 6-feet. If greater depth is needed the Design Engineer shall provide vertical deflection up to establish a 6 foot depth maximum at all branch and hydrant valves.

5.1.5 Velocities

Normal working velocities (Average Day Demand) shall not exceed 5 feet per second. In no case will velocities exceed 12-feet per second. Consideration for surges from higher velocities must be considered in the design.

5.1.6 Pressures and Flow Calculations

The City of Bend has numerous pressure zones around the City, each with unique pressures. The City strongly recommends that the designer understand the pressure zone they are in and the specific requirements associated with that zone.

The following table identifies the City of Bend requirements for pressures:

Condition	Pressure (PSI)
Minimum Service Pressure Under Fire Flow	20
Maximum Service Pressure without PRV	80
Maximum Service Pressure with PRV	120

The City of Bend is required to ensure required fire flows can be obtained at 20 psi. Pressures higher than 20 psi are not guaranteed, and the designer should consider how pressures may change over time as additional development is added beyond any proposed tie in or extension of the existing water distribution system.

Normal service pressures are defined as static pressures on peak day demand. Pressures below 40 psi typically generate complaints. To avoid complaints, the designer is required to design facilities to obtain this goal. If normal service pressures cannot be met, each service line will require an individual and private pressure pump located a minimum of six feet past the City premise isolation and shall not be located on City Right-Of-Way, and/or the title to the property that the service line is serving shall be modified to state:

> *"Known low water pressure area. The City of Bend is not responsible for inadequate service pressures associated with this property. If pressures are unsatisfactory to the property owner, the property owner at their discretion can install a pressure pump on the downstream side of the City Meter at the owner's expense. The pump shall be located at a minimum of six feet past the premise isolation and shall not be located on City Right-Of-Way. In no situation is the City responsible for maintenance, service, replacement, of this pump."*

Maximum service pressures that are at, or exceed, 80 psi on City owned mainlines will require a pressure reducing valve and vault. The designer will need to meet with the City to determine exact location, orientation, size, and type to be installed. Water service lines past the City owned meter must meet plumbing code requirements for maximum pressure. It is strongly suggested that service lines that are within 10% of maximum pressure as determined by plumbing code install individual pressure reducing valves.

5.1.7 Bends and Joint Deflection

All bends shall be called out on the plan and profile by station and offsets, including size, number, and designation (90°, 45°, 22-1/2°, 11-1/4°) of each. When applicable, joint deflection shall be called out in the number of degrees per joint and radius of curvature when several joints in succession are to be deflected. Deflection shall not exceed one half the manufacturer's recommendation in conformance with the City of Bend, Special Provisions, Section 01140.41.

5.1.8 Thrust and Restrained Joints

The City requires mechanical restrained joints. Any other thrust restraints require a waiver request as specified above. All restrained systems shall be in conformance with the City of Bend, Special Provisions, Section 01140.

The Engineer shall provide calculated restrained lengths for all bends, tees and appurtenances requiring thrust restraint. Calculations shall be run under the following minimum requirements, as per AWWA standard: 2:1 safety factor, type 5 trench, 3-foot bury, 150 psi test pressure and soils consistent with the site geology (typically a GM – Silty gravel, or as determined by the engineer of record). All improvement plans shall have a restraint table stating the applicable restrain lengths for pipe size and fittings used, calculation inputs and installation notes.

5.1.9 Pressure Reducing Vaults

Pressure Reducing Vaults designs shall be coordinated with the City on a case by case basis.

5.2 Service Lines

The minimum water service line size is 1-inch diameter to the meter. This line size may be reduced through the meter as required for domestic service. The water meter shall be the same size or one size smaller than the water service line. No more than one service line per tax lot is permitted unless otherwise approved by the City Engineer.

Service lines shall be installed as shown on the Standard Drawings. All service runs shall be one continuous run of copper within the City's right-of-way. All service lines shall have a minimum of 3 feet of cover.

Marking tape shall be installed a minimum of 12 inches above the service line at the top of the pipe zone material, centered on the service line.

Service taps at the main shall not exceed one tap every 2 feet and be a minimum 2 feet from bends or bells on the mainline. Water services are to maintain 10 feet separation from franchise utilities, sewer and storm when within the right of way or in a utility easement.

Services 2-inches and larger shall be hot tapped with a minimum 2-inch valve, using the appropriate tapping saddle and appurtenances as called out by the Engineer of Record. Service connections to existing pipe may utilize a saddle tap and valve. All water service lines shall be placed perpendicular to the water main.

New service connections greater than 2" shall be designed by a Professional Engineer.

Connections to transmission lines are not permitted. A separate distribution line shall be required to provide single services.

City standard is that services are to be provided directly to property with meters and premise isolation installed within the right of way for residential application. Reference Standard Drawings W-4, W-4A, and W-4B for residential service installation. Service connections beyond the premise isolation, installed through one property to another shall be considered private and installed within an easements. The City is not responsible for maintenance beyond the meter. Reference Standard Drawings W-5, W-5A, and W-5B for commercial service installation.

Water services not being used, needing to be upsized or needing to be relocated within in a parcel are required to be removed back to the main and the pipe removed from the right of way. The City requires that the corp stop shall be removed from the main and the main be plugged, unless otherwise approved by the City Engineer or designee.

If the meter assembly/box or service line is damaged during construction / site improvement activities / during the warranty period or if the existing meter box or service line does not meet current City Standards and Specification, the developer / property owner will upgrade the components of the service out of conformance.

For all non-residential potable services a minimum of a D.C.V.A. (Double Check Valve Assembly) shall be required for Premise Isolation. The Premise Isolation Assembly shall be installed in accordance with O.A.R. (Oregon Administrative Rules) 333-061-0071, Oregon Plumbing Specialty Code Chapter 6, and City of Bend Standards and Specs before a meter is set by City of Bend Utilities Personnel. The degree of hazard of each service connection shall be identified and verified by City of Bend Safe Drinking Water Program. Health Hazard connections shall be required to either utilize an approved In-Premise Backflow Prevention Assembly that is commensurate with the degree of hazard, (Air Gap or Reduced Pressure Principle Backflow Prevention Assembly) or install the Health Hazard Assembly as Premise Isolation. A Reduced Pressure Backflow Assembly will be required at the service connection when non-potable water services (i.e., COIC irrigation) and City water services exist at the same project site, per State regulations.

All residential water services shall have the backflow assembly/meter loop installed by City of Bend Utilities Personnel after construction and inspection approval of the service pipe and water meter box.

5.2.1 Services Off of Fire Lines

The City of Bend will not permit fire hydrant or fire sprinkler lines to be used as the domestic service line. Potable water services must be tapped from the main separate from the fire line. Fire sprinkler services shall not connect to fire hydrant lines unless approved by the City Engineer.

Fire sprinkler lines must have a Double Check Detector Assembly (DCDA) installed with leak detection meter. The City's ownership of the fire sprinkler lines terminate at the right of way line with the installation of a gate valve per the standard drawing W-13B. All fire sprinkler lines and fire sprinkler vaults shall be reviewed by the Building Department when on private property to be in conformance with plumbing and fire code regulations. Fire sprinkler vaults are required at the right of way when the building exceeds 20 feet from the right of way line. In the instance where the building is within 20 feet of the right of way, the developer has the option of installing a fire sprinkler vault or installing the fire sprinkler plumbing (DCDA, Post Indicator Valves, and Fire Department Connections) within the building as approved by the Building Official.

Fire sprinkler services that use any chemical additions shall require an approved R.P.D.A. (Reduced Pressure Principle Detector Assembly). Fire services, vaults and backflow prevention assemblies shall be installed in accordance with O.A.R. (Oregon Administrative Rules) 333-061-0071, Oregon Plumbing Specialty Code and City of Bend Standards and Specs.

Unless approved otherwise, fire hydrant lines on private property shall have premise isolation at the right of way. The hydrant main and hydrant is privately owned and maintained by the property owner beyond the premise isolation.

5.3 Valves

Main line valves shall be located in the public right-of-way. The maximum distance between valves is 1,000 feet on transmission mains and 500 feet on distribution mains. Valve locations to be determined by the City. Typically, transmission mains are defined as lines that have no other services or distribution connections to them and are typically coming from one of the sources of water. All other lines are distribution lines.

5.3.1 Valve Location

Valves shall be located outside the normal path of wheel travel, bike lanes, and accessible travel path. No valve shall be located within 3-feet of an existing or proposed street gutter line and shall fall minimum 12 inches beyond the gutter pan where curb and gutter exists. All valves shall have a minimum distance of 18 inches measured from the top of the valve body to the top of the road surface. Where valves fall outside paved roadways, a concrete collar shall be constructed not less than 6 inches deep and centered in a 3-foot by 3-foot pad.

At all tee and cross fittings, valves shall be installed on every branch of the fitting unless otherwise approved by the City Engineer. In cases where the legs of the branches of the fitting are of different sizes, a valve shall be placed on the smaller diameter first. All valves shall be located within 5-feet of the cross or tee fitting.

At all dead-end lines shall be terminated using a valve and blow off.

Hot taps to existing watermains shall be permitted depending on the location of existing valves in the vicinity. Where valves are not adequate to the existing system, a cut in tee will be required with valves installed on all branches, or as determined by the City Engineer. Size-on-size taps will not be permitted unless approved by the City Engineer.

5.3.2 Valve Types

Gate valves are required on all waterlines 8 inches and smaller. Butterfly valves shall be used on all waterlines of 10-inch diameter or larger; or on smaller diameter lines where 18 inches of cover to the top of a gate valve body cannot be obtained. Butterfly valves shall be mounted with the stem vertical and on the “curb” side of the main.

Air-Vac/Air Release valves shall be considered during design. Typically these will be located at all elevation rises and elevation high points. Typically, a 1-inch Air-Vac valves shall be installed for 12-inch and smaller water mains and 2-inch Air-Vac/Air Release valves installed for all larger watermains, however the sizing shall be verified against manufacturer’s recommendation. All Air-Vac/Air Release valves will be located outside the vehicular roadway as illustrated in the Standard Details. All Air-Vac/Air Release valves shall be designed to be insulated to protect against a sustained temperature of -10 degrees Fahrenheit. Hydrants are not considered Air-Vac or air release.

5.3.3 Pressure Reducing Valves

Projects requiring a PRV station shall set up a meeting to discuss design requirements.

5.3.4 Blow-Offs

Blow off valves shall be located on all dead end lines. New lines that are connecting to existing lines at both ends will require a temporary blow-off for chlorination purposes. In no cases shall hydrant spacing be modified to use as a blow off. Design shall address

how water from blow off and flushing will be addressed to prevent any erosion or landscape damage.

5.4 All-Weather Access

Where water facilities requiring maintenance access outside paved right-of-way, a paved access pad or road sufficient for service equipment to operate without blocking the traveled way shall be constructed. Where water facilities (such as fire hydrants and valves) are away from paved right-of-way, a 14-foot wide 2-inch thick paved all weather access road, with a 6-inch base, or as approved by the City Engineer, shall be installed to provide access. If the access road requires a vehicle turn around, adequate space shall be included for an all-weather access road.

Where water facilities not requiring maintenance access (such as transmission lines) lie away from paved right-of-way, an all-weather access road shall be constructed over the line. This all-weather access road shall be a minimum of 14-feet in width and shall be surfaced with a minimum of 6-inches of compacted aggregate base. Compaction and treatments shall be in conformance with Part II, Section 2-3. The road shall be shaped to promote drainage and shall not cause the ponding of storm runoff.

5.5 Meters

All water service lines must have a meter box and assembly placed a minimum of 1 foot outside of hard surfaces (concrete and asphalt) unless approved by the City Engineer. Where meter boxes are unable to be located outside hardscape, an expansion joint shall be installed 12-inches around the entire perimeter of the meter box. When meter boxes are located in sidewalks with tree wells, the meter box shall be located a minimum of 6 feet from the tree well. Fire lines no longer require meters but are required to have double detector check assemblies (DCDA) to detect low-flow events. Any service line that is providing water from the City of Bend distribution system for purposes other than fire flow must have the entire amount of water used measured. Water meters shall be sized to the water service line size or one size smaller.

New meters installed at commercial and industrial properties must be one-inch minimum.

Commercial water meters shall be installed on residential projects that have three dwelling units or more.

Meters that are 3 inches or larger will be either a Sensus Omni or HbMag. All accessories, except the MTU, need to be included to insure the meter functions properly.

For domestic water services, the City's ownership ends at the meter. City's ownership for fire services ends at the right of way.

5.5.1 Automatic Meter Reading Systems

The City requires the STAR Network AMI system as manufactured by Aclara on all metered services.

All meters shall include an Aclara/STAR meter transmission unit. The transmission unit shall be installed on the bottom of the meter box lid as shown in the Standard Details.

5.5.2 Standard Meters

All water meters 2-inch and smaller shall be installed by the City of Bend. Meters shall be approved by the City prior to installation.

5.5.3 Vaults and Meter Boxes, Including Insulation

All vaults and meter boxes shall be installed a minimum of 3 feet off of the corner property line in each direction. No vaults or meter boxes can be installed more than 5 feet from the property corner without approval from the City Engineer. Vaults and meter boxes are to be installed outside of hard surfaces.

Meter banks, multiple meters placed in close proximity to one another to provide multiple lot services, are permitted with approval from the City Engineer. Meter boxes shall be staggered per Standard Drawing W-4. Water taps shall be spaced a minimum of 2-feet apart at the main. Stamped or engraved stainless steel or brass address tags shall be on the meter box to identify which meter services which address. Refer to the water meter standard drawing.

The following, or an approved equal, are the only approved meter boxes for services for 2-inch and smaller. All meter boxes must be tier 8 or equal. Meter boxes shall not have mouseholes.

Brand	Box	Lid
Armorcast	BOX –17x 30 x 18	LID-1730 Polymer with cast iron meter reader lid
Quazite	Polymer concrete; flared L 17 x 30 x 18	Quazite H20 17 x 30

For all meters larger than 2-inch, the designer will determine the appropriate meter box or vault. All meter boxes and vaults must be traffic rated. See Standard Details for 3-inch and larger meters.

All meter vaults and boxes must be installed to the correct finish grade. Any that do not meet this requirement, including requirements for correct depth of meter stops and service line, will not be activated and locked off with a City of Bend lock.

5.6 Fire Services, Flows and Hydrants

The City of Bend requires all new developments or extension of existing facilities to have a fire flow analysis performed. This analysis must be performed by the City of Bend. All relevant information to the proposed development or extension of services must be provided. Forms and fees for this service are available from the permit center in the Community Development Department (CDD) or on the City's website.

The fire flow analysis uses a calibrated hydraulic model to determine available flow. The analysis uses the peak day demand in the distribution system with storage tanks at half full to determine the available flow, static pressures, and residual pressures.

No other analysis for fire flow can be substituted for the analysis performed by the City using its calibrated hydraulic model.

5.6.1 Fire Flow Requirements

The following table is the required fire flows based on land use and development type:

Land Use Code	Development Type	Required Fire Flow (GPM)
AOD	Airport Operations District	2,500
ARID	Aviation Related Industrial District	2,500
ASD	Aviation Support District	2,500
ASDRA	Aviation Support District Reserve Area	2,500
CB	Central Business District (CBD)	3,500
CC	Convenience Commercial District	2,500
CG	General Commercial District	2,500
CL	Commercial Limited	2,500
CN	Commercial Neighborhood	2,500
EFUTRB	Exclusive Farm Use	1,500
IG	General Industrial District	2,500
IL	Light Industrial District	2,500
IP	Industrial Park	2,500
ME	Mixed Employment	2,500
MR	Mixed-use Riverfront	2,500
PF	Public Facilities	2,500
PO	Professional Office	2,500
PO/RM/RS	Mixed Use Office/Residential	2,500
RH	High Density Residential	1,500
RL	Low Density Residential	1,500
RM	Medium Density Residential	1,500
RR10	Medium-10 Density Residential	1,500
RS	Standard Density Residential	1,500
SM	Surface Mining District	2,500
SR2-1/2	Suburban Low Density Residential	1,500
UAR10	Area Reserve District	1,500

5.6.2 Fire Service Lines

The City of Bend requires all fire service lines be designed by a registered Professional Engineer up to the right of way and submitted through a right of way plan review and approval process. The fire service backflow/premise isolation device shall be designed in accordance to all applicable building/fire/plumbing codes under a building department permit. Where the building is located within 20 feet of the right of way line, the developer has the option of installing the premise isolation within the building, otherwise it shall be placed in a vault near the right of way line. All fire service lines will be installed from the nearest water main with a valve located adjacent to the tap/tee. Fire Department Connections (FDCs) and Indicator Valves (PIVs or WIVs) can be located on building walls with fire and building department approval. PIV's and FDC's must be located on private property, unless otherwise approved by the City Engineer. If approved by the City Engineer to be located within the right of way, the PIVs and FDCs shall be a minimum 5 feet from roadways/curb. Construction documents shall provide a plan and profile of the fire service installation up to the right of way line. The City of Bend standard detail for fire lines is a minimum standard only.

All fire service lines will require a DCDA around the backflow preventer.

Backflow Assembly vaults shall comply with the Uniform Plumbing Code requirement for electrical and heat for freeze protection as determined by the Building Department.

5.6.3 Hydrants General

Each hydrant shall be connected to the main with a 6-inch-diameter ductile iron branch with a 6-inch shutoff gate valve using a restrained MJ x MJ connection. Breakaway flange shall be no higher than 4-inches above the surrounding surface for Roadside Design compliance. See Specification 01160.10(a) and Standard Drawing W-7. No valve shall be located closer than 84-inches to the hydrant. When the hydrant branch line exceeds 100 feet in length, two valves shall be required: one near the hydrant, and one at the main.

Hydrants shall comply with AWWA specification C-502-64 with a dry top, left-hand opening, and have one 5 1/4-inch steamer nozzle and two 2 1/2-inch hose nozzles. The steamer nozzle should always face the street with the exception of parking lots.

Hydrant extensions are not allowed on new hydrants but can be utilized only on existing hydrants at the discretion of the City Engineer and the City of Bend Utilities Department. Extensions shall be from the manufacturer or approved equal, with a maximum of one extension per hydrant. Hydrant extensions shall not exceed 12-inches. All hydrant extensions shall be inspected during installation and approved by a City inspector. Hydrant drains will be surrounded by a washed gravel pocket, wrapped with filter fabric or 12 millimeter plastic, to provide drainage. No hydrant drains will be connected to either the sanitary or storm sewer system.

Hydrants are not to be used in lieu if air release or air-vac valves.

5.6.4 Location

Fire hydrant placement shall be outside the pedestrian path of travel. Hydrants shall be spaced at no more than 400-foot intervals. Any further spacing requires approval of the Bend Fire Department.

Hydrants shall be located such that maintenance staff has complete access. They shall also be located to minimize the possibility of damage from vehicles or injury to pedestrians,

with location preferred near intersections not directly on the corner. Hydrants located in parking areas must be protected, preferably by placing hydrants in a curbed landscape median/island. Concrete filled steel bollards are not preferred. Unless otherwise approved by the City Engineer, hydrants placed onsite shall have a premise isolation valve installed at the right of way line. All plumbing onsite shall be privately owned and maintained by the property owner.

A hydrant shall be positioned within 100 feet of an FDC when required by the Fire Marshall.

5.6.5 Concrete Pad

Concrete hydrant pads shall be required around all hydrants (See Detail W-7 and W-8).

SECTION 2-6

Stormwater

Table of Contents

6.0 Stormwater 2
6.1 Design Storm 2
6.1.1 Water Quality Design Storm 2
6.1.2 Water Quality Design Volume 2
6.1.3 Water Quality Design Flow 2
6.1.4 Flow Control and Conveyance 3
6.2 Hydrologic Basis of Design 3
6.2.1 Hydrologic Design Criteria 3
6.2.2 Drainage facility testing 4
6.3 Water Quality Treatment 8
6.3.1 Treatment Controls 8
6.4 Conveyance 10
6.4.1 Pipe Material 11
6.4.2 Pipe Diameter and Length 11
6.4.3 Placement and Alignment 11
6.4.4 Outfalls 11
6.4.5 Storm Drain Debris and Safety 11
6.5 Flow Control 11
6.5.1 Sequential Implementation 12
6.5.2 Fencing 12
6.5.3 Embankments 12
6.5.4 Access 13
6.6 Drainage Submittals 13
6.6.1 Concept Drainage Report 14
6.6.2 Concept Drainage Report Applicability 14
6.6.3 Road and Drainage Plans 14
6.6.4 Minimum Plan Elements 15

6.0 Stormwater

To meet the City goals for stormwater management, stormwater drainage and stormwater quality as prescribed in the City of Bend Stormwater Master Plan, the City has adopted best management practices for addressing stormwater drainage in the City of Bend.

Designs of stormwater facilities and conveyance systems shall conform to the City of Bend Standards and Specifications and the applicable Oregon Department of Environmental Quality (DEQ) regulations. Where a conflict is discovered between City and DEQ requirements, the Design Engineer shall notify the City Engineer of the issue and the most stringent practice shall apply.

The City recognizes the current 2010 Central Oregon Stormwater Manual (COSM) as a standard design manual for stormwater and incorporates it into these Design Standards except as modified or otherwise prescribed herein. The following sections summarize key elements of the City design requirements. Stormwater design professionals are required to be familiar with the specific requirements and practices of the Manual and implement them fully into their designs for City approval.

6.1 Design Storm

All stormwater designs for new development or redevelopment projects shall address and comply with the eight basic requirements prescribed in the COSM. Any deviation from the Basic Requirements, or other provisions of the COSM must be fully demonstrated and documented in writing by the design professional through the drainage submittal process.

6.1.1 Water Quality Design Storm

The six-month National Resource Conservation Service (NRCS) Type I, 24-hour storm event is the designated water quality storm event to be utilized for both volume based and flow rate-based water quality best management practices (BMP's).

6.1.2 Water Quality Design Volume

Volume-based treatment BMPs are sized the same whether located upstream or downstream from detention facilities. The water quality design volume is defined as the volume of runoff predicted for the proposed conditions pollutant generating impervious surface (PGS) areas from the NRCS Type I, 24-hour storm with a 6-month return frequency.

6.1.3 Water Quality Design Flow

For runoff treatment facilities preceding detention facilities or when detention facilities are not used, the water quality design flow is defined as the peak flow rate predicted for the proposed conditions Pollutant Generating Surfaces (PGS) areas from the NRCS Type I, 24-hour storm with a 6-month return frequency.

For runoff treatment facilities located downstream of detention facilities, the water quality design flow is defined as the full 2-year release rate of the detention facility.

6.1.4 Flow Control and Conveyance

At a minimum, the 25-year design storm shall be required. Additionally, safe passage shall be provided for the 100-year event storm via an overflow path that drains toward the natural discharge point of the contributing basin, away from adjacent buildings and residences.

High-risk areas, as defined by the City Engineer, with the potential for extensive flooding, safety, or other concern, the design capacity shall be provided for a 50-year storm with safe passage for a 100-year storm. Low/sag points within roadways shall be designed to a minimum 100-year storm event.

Flow control facilities must be sized based on the total developed site area (both impervious and pervious areas, regardless of pollution generation) and take into account the immediate drainage basin(s) wherein the site lies.

6.2 Hydrologic Basis of Design

The following methods shall be used for the design of flow control and conveyance systems, in compliance with the COSM. The Engineer shall take into account soil types and geotechnical conditions into the design.

- National Resource Conservation Service (NRCS) Urban Hydrograph Method (TR-55)
- Santa Barbara Urban Hydrograph Method
- Level Pool Routing Method
- Rational Method / Bowstring Method

Other testing methods shall not be used in calculating facility sizes unless approved by the City Engineer.

6.2.1 Hydrologic Design Criteria

The Engineer shall use the following information in preforming storm water design, originating from the Central Oregon Storm Water Manual.

City of Bend 24-hour Storm Depths (inches)

6-Month	2-Year	10-Year	25-Year	50-Year	100-Year
1.0	1.5	2.0	2.5	2.8	3.0

The Rational and Bowstring Methods are not to be used for basins exceeding 10 acres. Rainfall intensities shall be based on the COSM's Appendix 5C Intensity-Duration-Frequency Curves, which have been tabulated from Bend in the following table.

City of Bend Rainfall Intensity (I, inches per hour)

Tc (min)	5	10	20	30	40	50	60	70	80	90	100
2 yr	1.30	1.05	0.78	0.60	0.49	0.42	0.37	0.34	0.30	0.28	0.26
10 yr	2.45	1.95	1.50	1.10	0.86	0.71	0.61	0.55	0.48	0.46	0.42
25 yr	3.25	2.65	1.90	1.50	1.25	0.95	0.82	0.71	0.65	0.60	0.55
100 yr	5.20	4.10	3.00	2.35	1.80	1.30	1.20	1.10	0.95	0.88	0.79

Time of Concentration (Tc) shall be no less than 5 minutes, with overland flow segments not exceeding 300 feet.

All applicable coefficients and design valves (Manning n, Time of Concentration value, etc.) are found in the COSM's Chapter 5.

Within the public right of way, storm delineation basins shall detain storm volumes no larger than 25,000 gallons (3,342 cubic feet). Catch basins, curb cuts and all applicable storm detention infrastructure shall be designed to reduce the basin size, avoid sag low points, and connect basins with overflow piping when conditions allow.

Public street design shall incorporate the storm water catchment basin to extend a minimum of 20-feet into the private lot. If topography is such that stormwater will never enter the right of way after the private lot's development, the Engineer of Record shall design the basin to the right of way. Calculations shall incorporate appropriate curve numbers or runoff coefficients for anticipated future impervious surface within the first 20 feet.

Where a regional storm basin (collecting private property into a public street) is to be employed in design or as determined necessary by the City Engineer, the larger basin design shall require geotechnical infiltration investigation specific for the drainage facility for use in design and have overflow structures installed to convey the 100-year storm event for the basin. The overflow is to be a separate structure from the 25-year containment facility, providing redundancy to the system.

Private sites, that meet the COSM review requirements (COSM chapter 2.1 criteria), will be reviewed by the City to ensure a 25 year 24-hour storm event is contained onsite and will not flow into the public right of way or an adjacent property. The size of private drainage facilities (UIC's or swales) do not have a maximum size unless there is the potential of the drywell to flow into the public right of way or a neighboring private property. If said conditions exist, storm facilities shall not exceed 25,000 gallons (3,342 cubic feet) as determined by a 25 year-24-hour storm event.

6.2.2 Drainage facility testing

Prior to approval of any private or public right of way project, the Engineer of Record (EOR) shall oversee the construction and testing of the drainage facilities on the approved construction documents.

Public drywell facilities shall conform to the following testing criteria:

1. Install the drywell per the approved plans, specifications and applicable construction guidelines. The EOR shall witness the construction of these facilities to ensure that the drain rock quantity is being placed, drain rock has sufficient voids, and the construction is per the City of Bend's standards and specifications. Pictures shall be taken and provided with the EOR's certification.
2. Inspect drywell prior to testing, making sure the drywell is clean and free of sediments.
3. Field check the accuracy of the flow meter by filling up a suitable container with known volume; for example a calibrated 55-gallon barrel.
4. Introduce clean water into the drywell and monitor using an in-line flow meter.
    a. If the drywell total inflow design volume is 10,000 gallons (1,336 CF) or less, place the design volume in the drywell within a 1 hour period and verify that the water either disappears immediately or document the standing water per the COSM Appendix 4B, Full Scale Drywell Test Method.

b. If the drywell total inflow design volume is between 10,000-25,000 gallons (1,336-3,342 CF), place an initial 10,000 gallons (1,336 CF) into the drywell within 1 hour. If any standing water is present at the end of the 10,000-gallon test, then the City will require the full design inflow volume and/or a Full Scale 2-hour Drywell test per COSM Appendix 4B.

5. Public and private swale facilities shall conform to the following testing criteria:

    a. Install the swale per the approved plans, specifications and applicable construction guidelines. The EOR shall witness the construction of these facilities to ensure the drain rock quantity is being placed per the design, has sufficient void capacity, and is constructed per the City of Bend's standards and specifications, if applicable. Pictures shall be taken and provided with the EOR's certification.

    b. Introduce stormwater into the swale per COSM Appendix 4E (Swale Flood Test) or 4F (Pond Flood Test)

6. Infiltration testing. Post-construction infiltration testing is required. Regardless of infiltration determination/testing, it is required that the EOR certify that all stormwater infiltrate from drywells/swales within 72 hours per COSM requirements.

    a. For drywells, draw down measurements shall be performance to determine infiltration rate and recorded during the drywell testing, tested in 5-minute increments for 20 minutes (obtaining 4 recorded draw down measurements). An average infiltration will be determined from the draw down measurements and compared to the design infiltration used in the calculations.

    b. For swales, infiltration shall be testing in conformance to the COSM Appendix 4D (Single-Ring Infiltrometer test), or other City approved method

        i. If design infiltration rates are not met during testing, the EOR shall determine how to 1) increase infiltration rates or 2) back calculate the facility design with the measured infiltration rate to determine if the facility has adequate capacity including a safety factor.

7. At the project closeout, private or public, the EOR will be required to certify the testing and construction of the drainage facilities, that they meet the performance standards under the stamped and approved design. Stormwater certification shall include

    a. All testing documents

        i. Recorded amount of water discharged into the facility, with start time and end time.

        ii. Draw down measurements. Depth of water at end of test with depth of water at 5-foot increments for 20 minutes duration, or until the facility is dry.

        iii. Construction inspection forms and pictures. Private and public project will not be approved by the City without this certification.

b. Certification letter. The letter shall be stamped by the project EOR on company letterhead as conforming to the approved construction document and identifying design assumptions are true in the completed facility.

Swale and drywell failure is determined if the facility cannot 1) contain volumes during the test, 2) if the facility is unable to infiltrate at the design infiltration rate (dictated in the construction documents or the storm water report) and 3) if the stormwater rises to the highest perforation in the drywell. It is the burden of the EOR to have the drainage facilities work in accordance to the design criteria approved on the construction documents.

Private and Public drainage facilities shall be tested for volume in conformance to a method determined by the EOR and in conformance to COSM and that all storm systems work in conformance to the engineer's design.

The standard testing form to be submitted to the City is provided on the next page.

UIC/Swale (Facility) Testing Report Form

Project: _____ Permit number: _____

Drywell ID: _____ Engineer of Record: _____

Date Tested: _____ Engineer Company: _____

Tester: _____ Testing Company: _____

Facility Dimensions:

Depth (*A*): _____ feet Length: _____ feet Width: _____ feet

Testing (Based on approved plans and COSM requirements)

Required quantity: _____ gallons Required Testing time: _____ min.

Assumed / Design Infiltration: _____ gal/min = _____ ft/min

Test Time Start: _____

Depth of water at start: _____ feet

Test Time End: _____

Depth of water at end: _____ feet (*B*)

Drawdown time – Infiltration Determination

Time (After test)	Depth, feet	Depth Change, feet, (*C*)	Infiltration (ft./min) I = *C* / 5
Test End	(*B*) =	0	
5 min			
10 min			
15 min			
20 min			
		Infiltration Average =	

Passed: ☐ Failed: ☐

Tester Signature: _____ EOR signature: _____

6.3 Water Quality Treatment

Water quality treatment design shall comply with Chapter 6 of the COSM with the following modifications:

The City of Bend is subject to Oregon Department of Environmental Quality (DEQ) regulations for piped discharges to surface water bodies and for underground injection control (UIC) systems. All UIC systems installed shall meet rule-authorization requirements. All rule-authorized UIC systems must have a pre-treatment barrier, or other appropriate control(s) in place to treat stormwater prior to discharge into the subsurface. Additionally, UIC systems shall not be installed within 500 feet of any water wells, within drinking water protection two year time of travel areas, or in locations where the injected stormwater could affect contaminated soils or DEQ cleanup sites.

6.3.1 Treatment Controls

The following treatment controls are required by the City, in descending order of preference. The treatment controls selected for a specific site shall address the pollutants expected for that site, along with the specific geotechnical conditions of the site. Projects within major drainage basins adjacent to the river or drainage basins containing MS4 system shall address pollutants of concerns for the river, which is nitrogen limited. Pollutants of concern in the river through the City of Bend related to stormwater include: sediment/turbidity, pH, dissolved oxygen, and chlorophyll a. Pretreatment for Underground Injection Controls should focus on spill control. These controls shall be designed to the guidelines included in the standard drawings, and the COSM, with the City's standard drawings configurations and sizing taking precedence in case of a discrepancy. Treatment trains are encouraged as appropriate.

Given the importance of water quality, the City wishes to see preferred strategies in different areas of the City.

Table 6-1. Preferred Stormwater Strategies by Area

Area	Strategy	Types of Controls
Areas that drain to surface water	• Reduce flows to river/surface waters • Provide highest level treatment for remaining • Minimize sediment • Prevent facility clogging	• Drywells or infiltration trench with spill protection • Bioretention/Infiltration swale, pond, basin, planter box
Wellhead Protection Areas (One through 10 year Time of Travel)	• Spill Protection • Surface Infiltration Controls • Direct runoff to outside area if can for UIC use • Prevent facility clogging	• Water Quality Sediment Manholes, Oil/water separator TAPE approved manufactured spill control • Bioretention/ infiltration swale, pond, basin with treatment vegetation, planter boxes
Other Areas	• Dispersed System • UICs and regional controls • Prevent facility clogging	• Drywell or infiltration trench with spill protection (e.g., Water Quality Sediment Manholes) • Bioretention/infiltration, swale, pond, or basin • Planter boxes • Vegetated filter strip • Grassy swale

The City of Bend requires the installation of Sedimentation manholes, per City of Bend standard drawing STRM-7, to be constructed prior to UIC's discharge unless otherwise approved by the City Engineer. Direct discharge from a swale into a drywell shall not be permitted without the installation of a sedimentation manhole upstream. Sedimentation manholes provide for a convenient method to trap contaminated spills and to manage sediment loads prior to injection into the UIC.

Table 6-2. Preferred Treatment Controls

Treatment Type	UIC Pretreatment	Basic Treatment (TSS)	Oil Control (TPH)	Metals Treatment	Nitrogen[3]
Bioretention Systems—Storm Water Planters	X	X	X	X	X
Vegetated Infiltration Swales	X	X	X	X	X
Bioretention Systems—Landscape Detention	X	X	X	X	X
Extended Detention Dry Ponds	X	X	X	X	X
Grassy Swales	X	X		X	
Vegetated Filter Strips	X	X	X[1]	X[1]	
Sedimentation Manholes	X	X	X	X	

1. Vegetated filter strips are only applicable for oil control and metals when installed in series with an above ground flow control facility, such as a detention or evaporation pond. Such designs will be evaluated on a case by case basis.

2. Treatment controls for Nitrogen were determined using the International Stormwater BMP Database, 2014 BMP Performance Summaries.

6.4 Conveyance

A conveyance system includes all natural or constructed components of a storm drain system that collects stormwater runoff and conveys it in a manner that adequately drains areas, sites, structures, and roadways, minimizing the potential for flooding and erosion.

The City defines an underground injection control, UIC, system as a drywell. The Department of Environmental Quality (DEQ) defines a UIC as structures that are deeper than wide at the land surface and utilize infiltration by a perforated pipe or drain field. UIC regulations do not apply to swales, french drains, or footing drains. UICs are to be placed outside the groundwater 2-year time of travel zones for drinking water source areas and not within 500 feet from a water well. Refer to DEQ UIC registration and rule authorization guidelines.

Drillholes are no longer permitted within the City of Bend right of way. Projects that contribute to or front an existing drillhole will either be decommissioned in accordance to DEQ requirements or have upstream infrastructure (sedimentation manholes and/or City of Bend catch basins with sumps, as approved by the City Engineer) constructed. Conveyance systems in the City of Bend shall be designed in accordance with COSM.

6.4.1 Pipe Material

Storm pipe under roadways or in areas that have traffic loads shall be constructed of AWWA C900 PVC pipe. Where storm pipe is within the landscape strips beyond the street curb, the Engineer has the option of using ASTM D3034 PVC sewer pipe. All pipe installed shall conform to City of Bend specifications.

6.4.2 Pipe Diameter and Length

The minimum pipe diameter shall be 8 inches. Pipe diameter shall be determined to ensure it is of proper size to convey a minimum 50-year storm event. When in the sag/low point, the pipe shall be sized to a 100-year storm event. The maximum length of pipe between junctions shall be no greater than 300 feet. Pipe diameters cannot be downsized for downstream runs.

6.4.3 Placement and Alignment

No storm drain pipe in a drainage easement shall have its centerline closer than 5 feet to a private rear or side property line or 10 feet from building foundations or other structures. For a storm drain located under the road, the storm drain shall be placed in accordance with the City of Bend standard detail. If it is anticipated that a storm drain system may be expanded in the future, provisions for the expansion shall be incorporated into the current design. Minimum depth of pipe is 12 inches below street base to top of pipe.

Drywell perforations shall be constructed in native soils, outside fill material. The drywell barrel foundation shall always be constructed on native ground.

Storm pipes shall meet the separation requirements of a sewer pipe: 10 feet from water mains and services. Storm pipe vertical separation from water mains/services shall be 18 inches unless a storm pipe is installed as AWWA C-900 PVC with a full stick of pipe centered at the water crossing.

6.4.4 Outfalls

New outfalls to the Deschutes River or other water bodies designated as waters of the United States require regulatory agency approval.

6.4.5 Storm Drain Debris and Safety

Debris protection shall be provided for storm drain systems. Debris may consist of soil deposits (that is, silt, sand, gravel and boulders), limbs, sticks, trash, or other landscaping materials.

Safety bars shall be provided for outfalls with a diameter of 18 inches or greater to protect from unauthorized individuals entering the storm drain system. Outfalls within a fenced area are not required to have safety bars. The clear space between bars shall be less than 4 inches.

6.5 Flow Control

Flow control facilities mitigate potential adverse impacts on downstream properties and natural resources resulting from the increase in stormwater runoff caused by land development.

Unless specifically approved by the City of Bend, stormwater runoff from any proposed land development to any natural or constructed point of discharge downstream shall not exceed the pre-development peak rate of runoff.

Flow control systems in the City of Bend shall be designed in accordance with COSM.

6.5.1 Sequential Implementation

In general, for any activity that creates, alters, or modifies a natural or man-made drainage system the following control measures are to be implemented sequentially:

1. Reduce runoff volumes and polluted runoff through Low Impact Development designs and source control measures.
2. Address stormwater drainage with surface systems, such as above ground vegetated infiltration swales.
3. If surface control does not provide adequate capacity, treat the water quality storm in a surface facility and provide an overflow to an approved regional above ground retention facility or rule authorized UIC.

6.5.2 Fencing

Fencing or other barriers shall be required to protect the health, welfare, and safety of the public under the following circumstances:

- Ponds with the first overflow at 3 or more feet above the pond bottom
- Ponds with side slopes in excess of 3H:1V
- Drainage facilities with retaining walls 2.5 feet high or taller

The City of Bend reserves the right to require a fence around any drainage facility should there be a concern for safety.

The minimum fencing requirements are as follows:

- The fencing shall be at least 4 feet tall unless otherwise specified by the City of Bend, and provide visual access per the City of Bend building code requirements for fence height and openings.
- Gates are to be provided where drainage facilities are fenced. The gates shall be a minimum of 12 feet wide with provisions for locks. Separate gates may need to be installed where the maintenance access drive connects to a public or private roadway.
- At the discretion of the City of Bend, marking fences (that is, vegetation, boulders, etc.), terraces, steeper side-slopes, egress bars, etc., may be allowed.

6.5.3 Embankments

The height of an embankment is measured from the top of the bank to the catch point of the native soil at the lowest elevation. Embankments shall meet the following minimum requirements:

- Embankments, 4 feet in height or more, shall be constructed as directed by a Licensed Geotechnical Engineer.
- Embankments shall be constructed on native consolidated soil, free of loose surface soil materials, roots, and other organic debris.
- The embankment compaction to 95 percent of the Modified Proctor Density, ASTM Procedure D698. Placement moisture content should lie within 1 percent dry to 3 percent wet of the optimum moisture content.

6.5.4 Access

Maintenance access roads shall be provided to control structures and other drainage structures associated with the stormwater facility (that is, inlet or bypass structures). Where storm infrastructure is away from paved right-of-way, a 14-foot wide 2" thick paved all weather access road, with a 6-inch base, or as approved by the City Engineer, shall be installed centered over the sewer line with 6' x 6' asphalt or concrete pad around manholes.

In ponds and swales, an access ramp is required.

6.6 Drainage Submittals

This section provides a framework for uniformity in Drainage Submittal preparation. Properly drafted construction plans and supporting documents should also facilitate the operation and maintenance of the proposed drainage system long after design and construction.

The City of Bend reviews the Drainage Submittal for compliance with these Design Standards and other applicable standards. The Drainage Submittal includes the Construction Plans, Full Drainage Report, and, other documentation to support the proposed stormwater management methods for the project. Depending on the complexity of the project, the City of Bend may request that a Concept Drainage Report (CDR) be submitted for review with the planning application or during the preliminary design process. The submittal and/or approval of the CDR does not replace the Drainage Submittal requirements. State law requires that all engineering work be performed by, or under the direction of, a qualified Engineer. The final Drainage report will be signed and stamped by a registered Engineer.

The Drainage submittal shall include the following components:

- Narrative
    - Project Description
    - Summary of Basin Requirements and other conditions/permits
    - Summary of Geotechnical Site Characterization
    - Downstream/Down-gradient Analysis
    - Hydrology Assumptions
    - Storm water Facility Description, existing and proposed
    - Conveyance System Description
    - Erosion and Sediment Control (ESC) Measures Description

    - Long Term Maintenance
        - Inspection plan / agreement – Provide calendar of required inspections
        - Spill Prevention and Control Plan
        - ESC Plan
- Storm Basin Map
- Soils Map
- Phasing Map (if applicable)
- Site Photos
- Hydrology Calculations
- Facility Sizing Calculations
- Conveyance Calculations
- UIC / swale testing criteria
- UIC rule authorization / registration documents, if available at time of report submittal
- 1200C permit plans and application, if applicable
- Grading, drainage facility, and erosion control plans (11x17).

The Long Term Maintenance section of the report shall be on a separate page as it will be attached to a Storm Water Maintenance Agreement (SWMA), if applicable for the site work. Storm Water Agreements are not required for public facilities

Drainage submittal requirements in the City of Bend shall be in accordance with COSM with the following modifications.

6.6.1 Concept Drainage Report

Acceptance of a CDR does not relieve the project proponent from a Geotechnical Site Condition Report, a Downstream/Down-Gradient Analysis, or changes to the design that may be necessary in order to meet the criteria and standards found in these Standards and the City of Bend's guidelines.

6.6.2 Concept Drainage Report Applicability

The City of Bend also reserves the right to require a CDR for projects when any unspecified drainage conditions or extenuating circumstances are present.

6.6.3 Road and Drainage Plans

Construction drawings shall be submitted for review by the City of Bend. The submittal and acceptance process shall be in accordance with the current City of Bend Standards and Specifications. Road and drainage plans shall include the City of Bend standard notes for construction.

6.6.4 Minimum Plan Elements

The road and drainage plans shall provide enough detail for a third party to be able to construct the proposed facilities per the Engineer's design. At a minimum, the plans shall meet the City of Bend's Design Standards, and the minimum plan elements described in the COSM.

SECTION 2-7

Grading and Erosion Control

Table of Contents

7. Grading and Erosion Control 2

7.1 Erosion Control 2

7.1.1 Erosion Control Plans 2

7.1.2 Erosion Control Maintenance 3

7.1.3 Erosion Control Slope Mitigation 4

7. Grading and Erosion Control

A comprehensive grading and clearing plan is required by the City of Bend Grading/Excavation/Stormwater Management Ordinance (Title XVI).

Soil conditions shall be addressed with the information gathered from the requirements of Section 2-11 where slopes greater than 2 horizontal to 1 vertical (2:1) exist, retaining walls greater than 48" in height or extensive areas of fill are proposed, unusual soil conditions are encountered or upon the request of the City Engineer.

Retaining walls or any other special structures shall be shown on the plans. Walls within 2 feet of a property line, having hydrologic, vehicular, or structural surcharge, or exceed 48 inches in height shall be designed by a registered Engineer and reviewed by the City of Bend for permitting. If a rockery/boulder wall is proposed for a site, a prescriptive design and installation document is available on the City of Bend's Community Development Department's (CDD) website providing additional permitting information.

If grading permit is required per Title XVI no work shall commence until a grading permit has been issued and a preconstruction meeting has been held.

All grading, erosion and drainage control plans submitted for review shall include the components required under the Central Oregon Stormwater Manual (COSM) and Title XVI of the Bend Development Code (BDC).

Grading shall never exceed a 2:1 cut/fill unless slope is verified by a geotechnical engineer and stabilized promptly after grading. 1.5:1 cuts are permitted where excavation is within stable rock.

If a site exceeds 2 feet of fill, structural backfill shall be placed and tested in conformance to a geotechnical engineer's specifications. The City of Bend Building Department will require testing of this fill structure backfill before placement of structures on it.

7.1 Erosion Control

Erosion control methods shall be shown on all construction documents and grading plan submittals. Every plan shall include methods for 1) temporary erosion control methods, 2) a plan for final slope stabilization and mitigation for the disturbed ground, and 3) erosion control maintenance. Stormwater and sediments will be contained onsite, preventing the passage into right of way and/or adjacent private property.

All erosion control must be installed before mobilization, grubbing and/or grading begins. Water trucks or other means of controlling dust must be present on site and/or have a tackifier applied to disturbed soils.

7.1.1 Erosion Control Plans

The minimum requirements, if applicable, for an erosion control plan are as follows:

- Existing and proposed topographic contours shall be shown with adequate spacing of contour labels to easily discern direction of slope on a site.
- Clearing limits are defined. This includes site perimeter and areas to be protected (tree, utility, Areas of Special Interest, etc.)

- Construction Access Route. Every location where vehicles enter a site must have a construction entrance conforming to the minimum City standards.
- Sediment Controls (dust and water borne sediments)
- Soil stabilization
- Inlet Protection
- Runoff Control
- Concrete Washout
- Material Storage / Stockpiles
- Channel and outlet stabilization
- Dewatering
- Permanent Facilities
- Drywells, swales, other permanent detention/retention facilities
- Permanent erosion control for un-vegetated soils and slopes.

Inlet protection placed on grated inlets of street surfaces (bio-bags, gravel bags, bales, etc.) will not be permitted. All grated inlets are required to have Pre-Fabricated Filter Inserts with overflow installed per COB standard drawing E-2B. Field fabricated inserts (filter fabric, drain cloth, etc.) are not permitted.

Street surface inlet protection (bio-bags, gravel bags, bales, etc.) will only be permitted for Ditch Inlets and Curb Cut Inlets per COB standard drawing E-2A.

7.1.2 Erosion Control Maintenance

Erosion control shall be maintained on all projects by the contractor under the guidance of the project EOR. The minimum maintenance of the Best Management Practices (BMPs) are as follows:

- Inspect on a regular basis (at a minimum weekly, and daily during/after a runoff producing storm event). All erosion and sediment control BMPs are to be fixed, replaced, or additional BMPs added immediately upon finding they are out of conformance or not functioning.
- Maintenance and repair:
    - Sediment must be removed from behind a Sediment Fence when it has reached a height of 1/3 of the fence height and also before fence removal.
    - Sediment must be removed from behind Bio Bags, Straw Wattles, and other barriers when it has reached a height of 2 inches and also before BMP removal
    - Sediment must be removed from a sediment basin or catch basin when it has filled half (50%) of the facility storage capacity (sump area) and also at the completion of the project.
- Remove temporary ESC BMPs within 30 days after the temporary BMPs are no longer needed.

- Permanently stabilize areas that are disturbed within 10 days of the project completion or when no work is being conducted.
- When soils are tracked onto pavements, said pavements shall be immediately be swept and kept clean
- Contractors are expected to track weather conditions and forecasts and stabilize sites as needed to prevent erosion.

7.1.3 Erosion Control Slope Mitigation

Prior to a site's approval, all disturbed, steep slopes (exceeding 2 horizontal to 1 vertical - 2:1), must be treated for long-term erosion control. Disturbed ground of lesser slopes shall treated for erosion control if erosion would transport sediments into either the right of way or a neighboring property.

Disturbed ground, especially steep slopes, shall be seeded. Seeding requirements are as follows:

- Seed shall be applied in as a hydroseeding application, containing tackifier and fertilizers.
    - Seed mix shall be free of noxious weed species, be native drought tolerant, and self-perpetuating. The following is seed mix, or approved equal, shall be used

Seed mix A	
Lolium perenne ssp. Multiflorium	Italian (Annual) Ryegrass
Festuca rubra var. sealink	Sealink Slender Creeping Red Fescue
Festuca breviplia var. Spartan II	Spartan II Hard Fescue
Triflorium repens	White Clover
Puccinellia pumila var Fults	Fults Dwarf Alkaligrass
Seed mix B	
Elymus trachycaulus	Slender Wheatgrass
Lolium perenne	Perennial Ryegrass
Dactylis glomerata	Orchardgrass
Festuca rubra	Creeping Red Fescue
Festuca rubra	Sheep Fescue
Trifolium repens	White Clover

    - Seed shall be placed at a rate to provide 80-90% coverage over the disturbed surface.
    - For immediate germination, application shall occur when the ground is not frozen, preferably when temperatures are between 75 and 85 degrees from daytime high. Hydroseeding should not occur on snow unless approved by the City Engineer.
    - Hydroseed shall be a Bonded Fiber Matrices (BFM) containing tackifier with seed and fertilizer. Install to manufacturer's specifications or to a minimum 2,000 pounds per acre on slopes flatter than 2:1, 3,000 pounds per acre on 2:1 slopes or steeper, whichever is most stringent.

- Prior to hydroseed placement, the contractor must
    - Track walk the full extent of the slope.
    - Install erosion control matting/blankets, fiber rolls/waddles, or other erosion control method per manufacturer's recommendations. The contractor and/or engineer shall determine the placement of these methods are based on the size of the disturbed slope and identification of any point discharge (channelized flows) onto the slope.

Table of Contents

8. Franchise Utilities 2
8.1 Franchise Utilities in Public Rights-of-way 2
8.1.1 General 2
8.2 New Construction and Conduit Banks 2
8.3 Shared Trenches 2
8.4 Trenching and Patching in Paved Right-of-way Areas 3
8.5 Small Wireless Facilities 3
8.5.1 Deviation from Small Wireless Facility Standards 3
8.5.2 Co-Location 4
8.5.3 Location Guidelines 4
8.5.4 Franchise Fees, License Fees and Permit Fees 5

8. Franchise Utilities

8.1 Franchise Utilities in Public Rights-of-way

8.1.1 General

Utility companies that have a current franchise agreement with the City may construct facilities in City of Bend public rights-of-way or publicly controlled easements in strict conformance with the City of Bend Standards and Specifications and the requirements stipulated in the Franchise Agreement. Prior to starting any construction, franchise utility companies shall obtain a City Excavation / Right-of-Way permit in an existing roadway or easement. Utility companies and their designers and agents shall cooperate with the City of Bend to allow for City inspection of utilities and the street restoration during construction. The intent of this requirement is to protect the interests of all utilities within City of Bend rights of way.

The City of Bend prefers that franchise utilities including, but not limited to, those required for electric, communication, lighting and cable television services and related facilities be installed underground, where possible. The developer shall make all necessary arrangements with the serving utility to provide the underground services. All above-ground equipment shall not obstruct clear vision areas and safe intersection sight distance for vehicular traffic.

8.2 New Construction and Conduit Banks

When a private, underground utility is not completely installed by the time of road subgrade construction, appropriate utilities conduits (dry line) shall be placed in all areas to be paved to allow future completion of the utility. Conduit termini shall extend beyond the edge of pavement or curb a minimum of 5-feet. For wired utilities (cable, phone, electric, etc.), the ends of the conduit shall be sealed and marked in accordance with the requirements of the affected utility.

Private water utilities shall construct a dry line in an area to be improved with the line extending beyond the edge of pavement or curb a minimum of 5-feet. Any valves or thrust restraint for design conditions shall also be installed at the time the dry line is constructed.

All installations of private utilities shall be subject to the inspection of the affected utility and shall be acceptable to both the affected utility and the City of Bend.

8.3 Shared Trenches

Private underground utilities shall not be located within 10-feet horizontally of any water or sewer main line and shall be separated a minimum of 1-foot vertically. This requirement does not strictly apply to sewer service lines extending to individual properties.

All private utility crossings of public water or sewer mains shall be perpendicular to the roadway travel path.

Utilities may share the sewer service trench in right-of-way areas in accordance with franchise utility agreements for shared trenches.

8.4 Trenching and Patching in Paved Right-of-way Areas

Trench excavation and backfill shall conform to City Standard drawings R-10, R-11 and ODOT specification section 00405. Trench patching shall conform to City Standard drawing R-10 and ODOT Specification.

Trenching for underground utilities shall be per City of Bend Standard Drawings R-10 and R-11 and specification section 00405.

8.5 Small Wireless Facilities

Small Wireless Facility installations shall conform to the City of Bend Standards and Specifications, as well as the current version of additional references as specified and/or amended in the various subsections below. Small Wireless Facilities additional references include, but are not limited to:

- City of Bend Development Code and Ordinances of the City of Bend;
- ORS 757.270 to 757.290;
- Oregon Joint Use;
- OPUC regulations;
- NESC;
- Applicable Building Codes;
- Adopted joint use and co-locating requirements of all approved franchisees within the City of Bend; and,
- All other referenced documents cited herein.

8.5.1 Deviation from Small Wireless Facility Standards

The City of Bend provides for Small Wireless Facility installation designs that are flexible and reflective of their context while meeting current safety and operational standards. There may be times when compliance with the City of Bend Standards and Specifications is not desired or possible and the City's design standard deviation process shall be followed to receive approval from the City Engineer. The City Engineer may delegate review authority.

This standard deviation process shall not be used to override a requirement of a land use decision once finalized. The Bend Development Code has provisions for requesting modification to land use requirements. Except as provided elsewhere, in other City codes, resolutions, and land use actions; written requests for deviations from these Small Wireless Facilities design standards shall be reviewed and may be granted by the City Engineer according to the criteria outlined in Part I Section 2 of this document.

8.5.2 Co-Location

The City of Bend prefers all Small Wireless Facilities be co-located per BDC Title 3.7. If the facilities cannot be co-located and a Franchisee wishes to install its facilities in the ROW, the Franchisee shall use the *City and County of Denver – Small Cell Infrastructure Guidelines (April 2018)* Chapters 1, Chapter 4, Chapter 5, Appendix A and Appendix B. All attachments to existing or new utility poles will be permitted through the approved Joint Use process of the utility pole owner. Attachments to City owned street luminaires shall comply with Chapter 3. Attachment to City of Bend Traffic Signal arms and structures is prohibited unless otherwise approved by the City Engineer and ODOT.

All references in the *City and County of Denver – Small Cell Infrastructure Design Guidelines* to "Xcel Energy" will mean the applicable utility pole owner, i.e. Pacific Corp or Central Electric COOP or other owner. All references to "City" and "County of Denver" will mean the "City of Bend." All inconsistencies, conflicting standards, and final interpretations of this or any additional references is at the discretion/ professional judgement of the City Engineer.

8.5.3 Location Guidelines

The following are guidelines for siting individual Small Wireless Facilities.

- Every effort should be made to install equipment in vaults underground or concealed as provided by the referenced design guidelines above.
- Power connections to free standing facilities shall be buried underground in vaults unless otherwise approved.
- All supporting equipment and connections to telecom facilities shall be installed in vaults underground, unless adequately shielded per the design guidelines or as approved otherwise.
- New facilities linked together via fiber optics or other telecommunications infrastructure (other than wireless) will need to be designed as an Infrastructure/Tier Three ROW permit and shall be installed underground (connecting cables and power) unless they are co-located on existing power and telecom facilities.
- Free standing facilities shall comply with Type 4 design specifications in Chapter 4 of the above referenced guidelines and shall be installed in all residential and business corridors as identified by the City during permitting.
- An applicant wishing to attach to existing City of Bend facilities i.e., street luminaires, shall demonstrate that the pole(s) are appropriately sized, and have significant strength to support the additional equipment. Applicant shall provide an engineering analysis of the structure by an engineer professionally registered in the State of Oregon.
- Refer to sections 3.4, 4.5, and 5.5 of the *City and County of Denver – Small Cell Infrastructure Guidelines (April 2018)* for additional placement requirements as applicable.

- The City will review ROW permits concurrently with Joint Use applications for co-location requests with the applicable utility. Approval of all permits is conditional on approval of the Joint Use application from the franchise utility.
- See Standard Drawing R-2 for clear vision requirements.
- The location of all co-located facilities shall be provided to the City in the form of an as-built drawing per Part II – Chapter 2.6 of these standards. All installations in the City's ROW shall be permitted per section 3.40 of the Bend Code.

8.5.4 Franchise Fees, License Fees and Permit Fees

Small Wireless Franchise Utilities shall pay all applicable franchise fees, license fees and permit fees in an amount established by the Fee Resolution or applicable Franchise Ordinance or Franchise Agreement, subject to any limit imposed by federal law. Utilities that do not have franchises shall pay the Utility License Fee plus applicable permit fees as outlined in the City's Fee Resolution, subject to any limit imposed by federal law.

SECTION 2-9

Canal and Irrigation Laterals

Table of Contents

9.1 General 2
9.2 Design 2
9.3 Materials 2
9.4 Testing 2
9.5 Easements 2

9.0 Canal and Irrigation Laterals

This chapter applies to all Private Irrigation District Canal standards and lateral piping considerations, but is primarily intended to cover open channel and piped conveyance of Irrigation District water through and across public rights of way.

9.1 General

All new or replaced Irrigation District canals and laterals shall be installed in culverts to outside the limits of public and utilities infrastructure in rights-of-way. The construction and design shall conform to the requirements of the Irrigation District and the City of Bend. Where requirements may conflict or differ, the requirement providing the highest level of control, security, and/or integrity shall govern the construction.

9.2 Design

The design sizing requirements of Irrigation District canals and laterals shall be determined by the appropriate irrigation company or their agents.

9.3 Materials

The conduit used for Irrigation District culverts in the City right-of-way shall conform to the requirements of stormwater Chapter 8 of design standard in this manual. Where less than 36 inches of cover is provided, but not less than 18 inches, AWWA C-900 or C-905 pipe shall be used.

N-12 high density polyethylene corrugated Water Tite (WT) pipe to meet or exceed ASTM 3212, ASTM C969 may be used only at the direction of the City Engineer and where the piping requirements necessitate arch culvert pipe. Piping shall be traffic-rated and shall be the heaviest gauge produced for the size specified. No joints shall be allowed under the pavement section of a city street unless noted on the plan and with an appropriate joint seal, and approved by the City Engineer.

9.4 Testing

Prior to testing any Irrigation District Standards, all other underground utilities shall be complete and in place. Pressure testing shall be performed for all irrigation pipe installations as specified in Part II Section 2.6 and Bend Standard Specifications as applicable to gravity or pressurized pipe systems.

9.5 Easements

Required easements shall be clearly depicted on plans and include a label and an easement statement. Easement widths shall be shown on the construction plans and plats. The full length of the easement shall be depicted where applicable. The smallest width for an irrigation lateral easement shall be 10-feet and requires City of Bend approval

SECTION 2-10

Surveying

Contents

10. Surveying 2

10.1 Datum Requirements 2

10.1.1 Horizontal Datum 2

10.1.2 Vertical Datum 2

10.2 Aerial Photography and Photogrammetry 2

10.2.1 Photo Targets 2

10.2.2 Supplemental Ground Surveying 2

10.2.3 Confidence Points 2

10.3 Requirements for a Licensed Surveyor 3

10.4 Use of Benchmarks 3

10.5 Survey Data Required on Plans 3

10.6 Construction Phase Surveying 4

10.6.1 Supplemental Control 4

10.6.2 Construction Staking 4

10.6.3 Cutsheets 5

10.7 Final Submittal of Electronic Files 5

10.7.1 CAD Files 5

10.7.2 Word Processing Documents 5

10.7.3 Image Files 5

10. Surveying

10.1 Datum Requirements

10.1.1 Horizontal Datum

Horizontal datum shall be based on the Deschutes County Coordinate System. The DCCS is a commonly used coordinate system, well-monumented within the City and available to all designers. It is also referred to as the "Central Oregon Coordinate System" and the "Deschutes County Grid". In any case, the basis for the coordinates is common to each. When converting to a Local Datum Plane (LDP), in which distances represent true ground distances, the project combined scale factor shall be stated for converting distances and coordinates between ground and grid. The combined scale factor shall be the product of the project elevation factor and the project grid factor.

10.1.2 Vertical Datum

Vertical Datum shall be NGVD 29.

10.2 Aerial Photography and Photogrammetry

Accuracy – Photo mapping for the purpose of creating a detail (base) map and Digital Terrain Model (DTM) shall be conducted so as to achieve at least 0.10-foot accuracy on hard surfaces.

10.2.1 Photo Targets

Aerial photo targets set within the project limits shall be surveyed for elevation by one or more closed differential or trigonometric level loops. The error of closure of each loop shall not exceed 0.02 foot. The elevations of aerial targets lying outside the project limits may be determined by GPS or other methods.

10.2.2 Supplemental Ground Surveying

Areas obscured or otherwise not detected by aerial photography shall be surveyed using ground methods that achieve at least 0.10-foot accuracy on hard surfaces.

10.2.3 Confidence Points

Random confidence points shall be measured in the field to verify the accuracy of the DTM. Confidence points shall NOT be included in DTM computation. There are four types of confidence points:

- **Surfaced** – hard surfaces (asphaltic concrete or concrete pavement, bridge decks, and walks)
- **Graded** – graded and possible compacted surfaces but not intended to be the traveled way

- **Natural** – surfaces in their natural state
- **Rugged** – extremely irregular surfaces (large rock outcroppings, rocky river bottoms, etc.)

The minimum number of confidence points required is 10 per instrument setup or 2 percent of the total number of contourable points used for the DTM. Two-thirds of all errors must fall within the error tolerances and 100 percent of all errors must fall within three times the error tolerances according to Table 12-1.

TABLE 12-1
Error Tolerances

Type	Imperial (feet)	Metric (millimeters)
Surfaced	+/- 0.1	+/- 30
Graded	+/- 0.3	+/- 100
Natural	+/- 0.6	+/- 200
Rugged	+/- 1.5	+/- 500

Confidence points shall represent all surface types contained in the DTM, shall be proportional to the four surface types depicted in the DTM, shall provide a good sampling of the overall model, and shall be placed randomly.

10.3 Requirements for a Licensed Surveyor

All tasks requiring boundary, right-of-way, and easement determination, design mapping, horizontal and vertical control, legal description writing, construction staking, and any other surveying services necessary to prepare construction plans shall be performed under the direct supervision of an Oregon Registered Professional Surveyor.

10.4 Use of Benchmarks

Where practical, two or more benchmarks shall be surveyed and the elevation differences compared with the published data. If an unacceptable discrepancy between two or more benchmarks is discovered, measures shall be taken to determine which elevation(s) is wrong, and the bad elevations shall be corrected and brought to the attention of the proper jurisdiction.

10.5 Survey Data Required on Plans

In addition to the requirements of Section 2-2.3.1, Information Required on Plans, General, the following survey data shall be shown.

Project control points shall be shown graphically on the corresponding plan sheets. Tables listing Point Number, Northing, Easting, Elevation, and Point Description shall be shown on all plan sheets on which control points appear. A statement describing the project Basis of Bearings and the horizontal datum shall be placed on the Horizontal Control Sheet.

The benchmark used for project vertical control shall be described on the Horizontal Control Sheet. The description shall include the location, type, size, and origin of monument, if known, and the elevation and vertical datum.

10.6 Construction Phase Surveying

10.6.1 Supplemental Control

Any additional survey control point(s) needed for construction staking shall be established by one of three methods:

- The point(s) shall be double-tied from existing adjusted control by measuring from a minimum of two different existing control points and averaging the xyz coordinates, or the point(s) shall be measured twice from an existing control point using a different existing, adjusted backsight point for each measurement, and averaging the xyz coordinates.
- The point(s) shall be included in a closed, adjusted traverse that begins and closes on two existing adjusted control points.
- The point(s) shall be included in a network survey that is adjusted by the Method of Least Squares.

10.6.2 Construction Staking

Construction staking shall include staking of 2 reference points (swingtie information) to allow horizontal and vertical location of hydrants, sewer services, and water services. These stakes shall be provided prior to construction of facilities so that City inspectors may verify position of facilities. Stakes shall be maintained for a minimum of 5 working days

- Fire hydrants shall be referenced with two offset stakes with data showing horizontal distance to face of hydrant, face of curb, and elevation of top of curb, and where practical, both stakes shall be placed at different distances on the extension of water line to the hydrant. Curb, if designed, shall be staked at the hydrant location approximately 5 feet ahead and back of the hydrant's centerline station.
- Sanitary and storm manholes and catch basins shall be referenced with two offset stakes with data showing horizontal distance to service at property line, and invert elevation of the connection at property line or easement line. All utility service laterals to existing or proposed lots shall be staked at the lot line abutting the street. The cut/fill to the rim and to all designed invert elevations of a structure shall be noted on the construction stakes.
- Curb shall be staked at station intervals acceptable to the construction contractor, but at minimum, at all horizontal and vertical event points and at 25 foot intervals on curb lines. Horizontal event points include, but are not necessarily limited to, curve points, horizontal linear changes in direction, and points of change in width. Vertical event points include, but are not necessarily limited to, vertical curve points, high and low points of vertical curves, and vertical linear changes in grade.
- Signal Poles-shall be staked with 2 offset stakes, set in line with the signal pole mast arm. Cut/fill to finished grade shall be referenced on the offset stakes.

- Water and sewer lines shall be staked at a minimum of 50 foot intervals and at all angles and fittings with data showing top of line elevation.
- All ADA ramps and shall be staked at the discretion of the City inspector in order to ensure PROWAG requirements are being met.

10.6.3 Cutsheets

When requested, cut sheets for each phase of construction shall be prepared and forwarded to the Construction Inspector and to the Construction Supervisor on the next business day following the construction staking. A business day for purposes of this section is any day that construction work proceeds on a project. At minimum, cut sheet information shall include feature being staked, station, offset left or right, design elevation, offset hub elevation, and cut/fill.

10.7 Final Submittal of Electronic Files

10.7.1 CAD Files

All CAD files for final submittal to the City of Bend shall be prepared as specified in Supplementary Requirements and Notes to User – CAD Drafting Standards and Guidelines.

All electronic spreadsheet files for final submittal to the City of Bend shall be compatible with MS Excel.

10.7.2 Word Processing Documents

All electronic word processing documents for final submittal to the City of Bend shall be compatible with MS Word.

10.7.3 Image Files

All non-editable image files for final submittal to the City of Bend shall be submitted in PDF format.

SECTION 2-11

Geotechnical Engineering

Table of Contents

11. Geotechnical Engineering 2

11.1 Geotechnical Data Report 2

11.2 Geotechnical Recommendations Report 3

11.3 Pipelines, Appurtenances, and Ancillary Structures 3

11.3.1 Excavation 3

11.3.2 Thrust Restraint 3

11.3.3 Drywells 4

11.3.4 Seismic Design 4

11.3.5 Ancillary Structures 4

11.4 Pavement Design 4

11.4.1 Traffic Analysis 4

11.4.2 Subgrade Properties 5

11.4.3 Inputs for 1993 AASHTO Pavement Design Procedure 5

11.4.4 Minimum Design Life, and Life-cycle Cost Analysis 6

11.4.5 Minimum AC Thickness 6

11.4.6 Minimum PCC Thickness and Joint Design 6

11.5 Sign, Luminaire, and Signal Pole Foundations in the Public Right of Way 6

11.6 Other Transportation Design Elements 6

11.7 Blasting 7

11.8 References 7

11.8.1 Utility Systems; Pipelines, Appurtenances, and Ancillary Structures 7

11.8.2 Transportation Structural Elements; Pavements, Bridges, Culverts, Embankments, Retaining Walls, and Cut Slopes 7

11. Geotechnical Engineering

A geotechnical investigation is required by the City of Bend for all projects involving excavation within the public right-of-way unless a project-specific deviation request has been approved by the City Engineer. Because of the wide array of site conditions and project types within the public right-of-way, the Design Standards for geotechnical services contained herein are intended only to supplement the recognized design manuals and code documents listed in paragraph 13.8 References, or the latest published edition of a reference as of the date of CIP contract execution or Initial Development Plan Submittal. The reference documents are listed in order of precedence, should a discrepancy be identified among the references. The City's Geotechnical Design Standards (presented below) and Construction Specifications shall take precedence over the reference documents.

The scope of the geotechnical investigation, typically including office studies, field and laboratory testing, engineering analyses, and recommendations for design and construction shall be developed by the Geotechnical Engineer based on engineering judgment and guidelines provided in applicable sections of the reference documents.

All public works and transportation infrastructure located within the public right-of-way shall be designed by a Professional Engineer registered in the State of Oregon. Copies of supporting design calculations shall be provided to the City Engineer upon request.

11.1 Geotechnical Data Report

Geotechnical Data Report (GDR). For development projects, a GDR is not required unless requested by the City following the Initial Submittal Plan. The purpose of this report is to summarize results of office studies and field and laboratory test results, as well as available information from previous projects. The GDR shall be submitted to the City prior to 30% completion of the design to allow the findings to be used in the design and for the development of the construction schedule and cost estimate. A report shall include:

- Description of the previous site uses, current site conditions, and proposed infrastructure.
- Review of available subsurface information such as geology maps, seismic hazard maps, and geotechnical reports for previous nearby projects.
- Reconnaissance of the surface conditions including topography, vegetation, exposed soils and/or rock outcrops, drainages, existing infrastructure, and any features that indicate geologic hazards such as subsidence, rapid erosion, or slope instability.
- Results of subsurface explorations including geotechnical boreholes, test pits, and/or alternative methods approved by the City Engineer. Soil and rock shall be described according to the Oregon Department of Transportation (ODOT) Soil and Rock Classification Manual (1987).

- Results of laboratory testing for soil and rock classification and the determination of engineering properties for design, including references to applicable testing standards.
- Results of field instrumentation (for example, piezometers or slope inclinometers) or field testing (for example, infiltration testing).

11.2 Geotechnical Recommendations Report

For CIPs, the responsible Engineer of Records shall be responsible for completing a Geotechnical Recommendations Report independent of the Geotechnical Data Report. A typical recommendations report shall include:

- Detailed descriptions of the proposed infrastructure and associated design criteria
- A brief summary of the subsurface condition and reference to the Geotechnical Data Report
- Discussion of analytical methods including technical references
- Summary and interpretation of analysis results
- Recommendations for design and construction

For new residential developments and fast-track CIPs, geotechnical data and recommendations may be provided in a single report with prior approval by the City Engineer.

11.3 Pipelines, Appurtenances, and Ancillary Structures

Potable water, stormwater, and sanitary sewer pipelines, and appurtenances, shall be designed according to the City's Construction Specifications and manufacturers' specifications. While it is recognized that these guidelines will provide adequate performance for typical projects, it remains the responsibility of the Design Engineer to ensure that the design satisfies the broader spectrum of criteria presented in the reference documents.

11.3.1 Excavation

All utility excavations shall satisfy the current requirements of the Oregon Administrative Rules (OAR), Division 3, Subdivision P, Excavations.

11.3.2 Thrust Restraint

Pipelines that convey fluid under pressure shall have thrust restraint measures at each bend and dead end run of pipe, designed according to Section M41 of the American Water Works Association (AWWA) 2009 Manual of Water Supply Practices. Joint restraints shall be used extending from the pipe bend to the point at which the friction along the pipe exceeds the thrust at that bend. Thrust blocks shall not be used without prior approval by the City Engineer.

11.3.3 Drywells

All drywells shall be designed in accordance with the provisions of the Central Oregon Storm Water Manual (2007), including completion of field and laboratory testing, where applicable.

11.3.4 Seismic Design

Buried pipelines shall be designed in accordance with the American Lifeline Alliance (ALA) 2005 publication "Seismic Guidelines for Water Pipelines," and above-grade piping shall be designed according to the 2002 ALA publication "Seismic Design and Retrofit of Piping Systems." The scope of the analysis will depend on the type and size of the utility, and its level of importance to the overall network. For example, even relatively small pipelines may be deemed important if damage to those lines could threaten an adjacent mainline that serves lifeline facilities. Critical segments will require probabilistic seismic hazard analyses and a complete screening for seismic hazards including seismic wave propagation, seismic settlement, landslides, lateral spreading, liquefaction, and the presence of potentially active faults. For most residential applications, the design shall be completed according to the simplified design methods given in these publications.

11.3.5 Ancillary Structures

Public works structures such as pump stations, reservoirs, control buildings, and vaults shall be designed in accordance with Oregon Structural Specialty Code (2007), City of Bend Standard Construction Specifications, as well as applicable standards of the AWWA, and the American Concrete Institute (ACI). Seismic analysis of these structures shall include potential impacts to connections with buried and aboveground utilities and appurtenances.

11.4 Pavement Design

Pavements that will support a high volume of heavy vehicles and all streets included in the transit classifications (Expressways, Arterials, Major Collectors) shall be designed according to the ODOT Pavement Design Guide (2007), the American Association of State Highway and Transportation Officials (AASHTO) Guide for Design of Pavement Structures (1993), and the AASHTO supplement for Rigid Pavement Design & Rigid Pavement Joint Design (1998). Other recognized methods such as those developed by the Asphalt Institute, Portland Cement Association, Asphalt Pavement Association of Oregon, or the American Concrete Pavement Association may also be used with prior approval by the City Engineer. Local residential streets shall be designed using pavement sections equal to or greater than the minimum dimensions presented in 11.4.5, Minimum AC Thickness, and 11.4.6, Minimum PCC Thickness and Joint Design.

11.4.1 Traffic Analysis

Pavement design will require an investigation of the traffic volumes, distribution of vehicle types, and traffic growth rates. The design traffic volume shall be calculated as the total number of equivalent, single, 18-kip axle load (ESAL) applications over the life of the pavement, based on the conversion factors for truck and non-truck traffic shown in Table 11-1.

TABLE 11-1

ESAL Annual Conversion Factors

	ESAL Annual Conversion Factors			
	Flexible Pavement		Rigid Pavement	
Vehicle Type	One-Way Traffic Data	Two-Way Traffic Data	One-Way Traffic Data	Two-Way Traffic Data
2-axle truck	100	50	100	50
3-axle-truck	220	110	270	135
4-axle truck	320	160	400	200
5-axle truck	650	325	950	475
6+ axle truck	650	325	950	475
Passenger cars	0.3	0.15	0.3	0.15
SUVs	1.9	0.95	1.9	0.95
Pickups	4.5	2.25	4.5	2.25

11.4.2 Subgrade Properties

Subgrade properties shall be determined for flexible pavements (resilient modulus) and rigid pavements (modulus of subgrade reaction) using methods appropriate to the proposed construction and design procedure. Back-calculation is the standard method for rehabilitation projects and may also be used for widening or the minor realignment of existing pavements. This method typically requires a condition survey, pavement cores, and falling weight deflectometer (FWD) testing to characterize the existing pavement section and subgrade.

For new pavement or full-depth reconstruction where back-calculation from FWD tests is not practical, the subgrade design parameters shall be determined using laboratory resilient modulus tests (flexible pavement), field plate load tests (rigid pavement), or correlations with the results of field dynamic cone penetrometer (DCP) tests. Subgrade parameters correlated from California Bearing Ratio (CBR) test results shall not be suitable for design. For roadways that will support less than 50,000 ESALs annually, the subgrade resilient modulus may be estimated based on the soils classification and prior experience with similar soils.

11.4.3 Inputs for 1993 AASHTO Pavement Design Procedure

Inputs for the 1993 AASHTO pavement design procedure shall be selected in accordance with the ODOT and AASHTO guidelines. For rehabilitation projects, selection of these design parameters shall be determined based on the condition of the existing pavement section and FWD test results. Structural coefficients used in the design of pervious pavements will need to be supported by field or laboratory test data, or recognized reference documents.

11.4.4 Minimum Design Life, and Life-cycle Cost Analysis

The minimum design life for new pavement sections shall be 20 years and 30 years for flexible and rigid pavements, respectively. Rehabilitated pavement sections shall have a design life of 15 years, or as determined by a life-cycle cost analysis (LCCA) according to AASHTO guidelines. LCCA shall be completed for new pavements and rehabilitation projects to evaluate the costs and benefits of the various pavement types or rehabilitation strategies.

11.4.5 Minimum AC Thickness

Refer to Section 3.8.5 Pavement Sections for minimum AC thickness.

11.4.6 Minimum PCC Thickness and Joint Design

The minimum Portland cement concrete (PCC) thickness shall be determined according to the procedures of the AASHTO supplement for Rigid Pavement Design & Rigid Pavement Joint Design (1998), or approved equivalent, and rounded up to the nearest 0.5-inch. An increased PCC section may be required at bus stops or at other locations where heavy trucks regularly stop and start. In no case, shall the PCC thickness be less than 5-inches, and all PCC pavement sections should include a base rock section that will provide adequate drainage.

Proper joint design is critical to the performance of PCC pavements and the submitted pavement design shall include an explanation of the selected joint patterns, including applicable references and design criteria.

11.5 Sign, Luminaire, and Signal Pole Foundations in the Public Right of Way

For standard sign, luminaire, and signal poles, the Oregon Department of Transporation standard foundation plans for standard sign, luminaire, and signal pole shall be used where the minimum geotechnical foundation requirements of the plans are met. Where nonstandard signs, luminaires, or signal poles are proposed, or where the geotechnical conditions do not meet the minimum requirements of the standard plans, foundations for the signs, luminaires, and signal poles within the public right-of-way shall be designed in accordance with the AASHTO (2001) Standard Specifications for Structural Supports for Highway Signs, Luminaires, and Traffic Signals.

11.6 Other Transportation Design Elements

All other transportation design elements, including but not limited to bridges, culverts, embankments, retaining walls, and cut slopes, shall be designed in accordance with the ODOT (2008) Geotechnical Design Manual, the ODOT (2004) Bridge Design and Drafting Manual, and the AASHTO (2007) Load and Resistance Factor Design Bridge Design Specifications. Abbreviated design efforts may be acceptable for some applications if approved by the City Engineer.

11.7 Blasting

All transportation and utility design elements requiring blasting for the excavation of rock shall be designed to prevent damage to existing infrastructure, and avoid unnecessary overbreak of the rock. A precondition survey of nearby structures, private or public, shall be completed prior to the start of blasting, and the blasting program shall include provisions for monitoring of potential damage, or vibrations or noise in excess of permitted levels.

11.8 References

Design of facilities for the City of Bend shall meet or exceed the requirements of the following references, or the latest published edition as of the date of CIP contract execution or Initial Development Plan submittal unless otherwise directed in writing by the City Engineer. The documents are listed in order of precedence, should a discrepancy between cited references be identified.

11.8.1 Utility Systems; Pipelines, Appurtenances, and Ancillary Structures

- Oregon Occupational Safety and Health Department (OR-OSHA). *Oregon Administrative Rules, Division 3, Subdivision P, Excavations.*
- Oregon Department of Transportation/Oregon Chapter of the American Public Works Association (ODOT/APWA). 2008. *Oregon Standard Specifications for Construction.*
- AWWA 2009. *Manual of Water Supply Practices –M41: Ductile-Iron Pipe and Fittings.* Third Edition.
- ALA. 2005. *Seismic Guidelines for Water Pipelines.* March.
- ALA. 2002. *Seismic Design and Retrofit of Piping Systems.* July.
- Central Oregon Intergovernmental Council (COIC). 2007. *Central Oregon Stormwater Manual.*
- International Code Council (ICC). 2006. *International Building Code.*
- ICC. Oregon Structural Specialty Code. 2008.

11.8.2 Transportation Structural Elements; Pavements, Bridges, Culverts, Embankments, Retaining Walls, and Cut Slopes

- ODOT. 2008. *Geotechnical Design Manual.*
- ODOT. 1987. *Soil and Rock Classification Manual.*
- ODOT. 2007. *Pavement Design Guide*.
- ODOT. 2004. *Bridge Design & Drafting Manual.* Updated April 2009.
- AASHTO. 1993. *Guide for Design of Pavement Structures.*

- AASHTO 2001. *Standard Specifications for Structural Supports for Highway Signs, Luminaires, and Traffic Signals, Fourth Edition.*
- AASHTO. 2007. *AASHTO Load and Resistance Factor Design Bridge Design Specifications, Fourth Edition.* Interim revisions dated 2008 and 2009.

SECTION 2-12

Landscape Architecture and Irrigation Systems

Table of Contents

12.0 Landscape Architecture and Irrigation Systems 2
12.1 Applicability 2
12.2 Landscape Plan Submittals 2
12.2.1 Design Parameters 2
12.2.2 Landscape Conservation 3
12.2.3 Street Trees and Plants 5
12.2.4 Standard Materials and Equipment 7
12.3 Irrigation Plan Submittals 8
12.3.1 Design Parameters 8
12.3.2 Drip Irrigation Design 9
12.3.3 Standard Materials and Equipment 9

12.0 Landscape Architecture and Irrigation Systems

The purpose of these guidelines is to promote community health, safety and welfare by protecting natural vegetation, set development standards for landscaping and street trees, and reduce water consumption through the use of appropriate site design, plant materials, and irrigation technologies.

These standards are in addition to and complement the Bend Development Code (BDC) Chapter 3.2, Landscaping, Street Trees, Fences and Walls.

12.1 Applicability

The City shall require submittal of Landscape and Irrigation plans for any system that is located within City right-of-way (ROW) and/or will become owned, operated and maintained by the City of Bend and when required by the BDC. All landscape and/or irrigation plans for work within all public ROW shall be stamped and signed by a licensed landscape architect defined by the Oregon Revised Statutes. Minimum general specifications for construction shall be set forth in the Oregon Standard Specifications (OSS) for Construction and these City of Bend Standards and Specifications.

The design standards include tree and existing plant habitat protection, removal of trees and landscaping materials, plant selection, tree spacing, as well as the safety of the public and City maintenance staff.

12.2 Landscape Plan Submittals

A landscape plan is required to include the following per BDC Chapter 4.2.300 Submittal Requirements:

a. A planting schedule containing the location, size, and species of the existing and proposed plant materials (at time of planting);
b. Existing and proposed building and pavement outlines;
c. Irrigation plans, written soil specifications at time of planting, and anticipated plant installation time line;
d. The location of existing and proposed terraces, retaining walls, decks, patios, shelters, and play areas;
e. Existing and proposed abutting street right-of-way landscaping;
f. Other information as deemed appropriate by the Development Services Director. An arborist's report may be required for sites with mature trees that are protected under BDC Chapter 3.2, Landscaping, Street Trees, Fences and Walls.

12.2.1 Design Parameters

The design criteria for public ROW projects shall conform to the current City of Bend specifications, codes and ordinances of the City of Bend. The following are the minimum design standards for the City of Bend. These standards apply to all public ROW projects unless a variance is approved in writing from the City of Bend.

12.2.1.1 Stormwater Source Control Principles

The landscape plan shall adhere to current stormwater quality source control principles for low impact development including but not limited to identifying the development/building envelope, designing with the natural topography, minimizing impervious areas, working to minimize the volume and velocity of stormwater runoff through features such as canopy coverage and infiltration, where appropriate, and incorporating treatment through soils.

12.2.1.2 Water Efficient Landscaping Principles

The landscape plan shall adhere to current water conservation principles for water efficient landscape design, including, but not limited to, addressing microclimatic conditions in the site design process, grading, plant selection, soil amendments, irrigation design, and other material selection.

12.2.1.3 Hydrozoning

The landscape design shall select and group plants by implementing principles of "matched hydrozones" that is, grouping and watering plants based on their water needs.

The City of Bend recognizes four hydrozone classifications as outlined in the Oregon State University Extension Service publication Water-wise Gardening in Central Oregon. The four hydrozones are:

1. Very Low - Most natives / may require supplemental water for plant establishment;
2. Low - Perennials and some shrubs / some supplemental water required during the growing season (Apr - Oct);
3. Moderate - Fruit trees, ornamental trees, and shrubs / regular amounts of supplemental water required during the growing season (Apr - Oct); and,
4. High - Turfgrass and vegetable gardens / regular amounts of supplemental water required during the growing season (Apr - Oct).

In addition, the following site-specific situations shall be considered for separating zones:

- Separate zones for planting areas that have soil types that are significantly different as a result of being amended or disturbed;
- Separate zones for plants in raised planters, containers, tree wells, tree pits, or other limited spaces because those spaces dry out faster;
- Separate zones for plants on slopes, because they may require several short irrigation cycles to prevent runoff;
- Separate zones for landscape areas separated by physical barriers such as walls, fences, roads, sidewalks and driveways.

12.2.2 Landscape Conservation

Landscape Conservation prevents the indiscriminate removal of significant trees and other vegetation, including vegetation and features associated with streams, riparian areas, wetlands and other protected natural resource areas. Landscape conservation standards apply to all development sites that contain significant vegetation, as defined in the BDC.

12.2.2.1 Tree Protection Plan

A Tree Protection Plan is required per BDC Chapter 3.2.200 Landscape Conservation. Significant trees shall be inventoried during the site design process and protected during construction unless otherwise approved for removal through the site plan review process. Significant trees are defined as individual trees with a specific trunk diameter as measured four feet above the ground

(known as DBH, “diameter at breast height”). Deciduous trees measuring 6 inches or greater and coniferous trees measuring 10 inches or greater shall be considered significant.

Significant trees shall be retained unless approved by the City to be removed for development. Preservation will be considered impracticable when it would prevent development of public streets, public utilities, needed housing, or land uses permitted by the applicable land use district.

A protection area shall be defined around the edge of all branches of each tree (drip-line) or strand of trees. Drip-lines may overlap between trees.

The tree protection plan shall include the following:

a. Inventory of Significant Vegetation. Depict all significant vegetation by DBH and species, showing property lines, two-foot contours and rock outcroppings;

b. Building Envelopes. The developer shall depict the buildable area of a lot that is consistent with the lot coverage area of the zone.

c. Barriers. The developer shall depict protection barriers on the site plan and locate and mark with flagging and/or signs all construction roads, parking places for workers, and areas for the storage of building materials, gravel and soil; stake out the exact locations of all utility trenches; erect physical barriers around all trees to be retained or groups of trees around the work site. Barriers that extend beyond the drip-line of the tree are preferred.

d. Soil Compaction. The Tree Protection Plan shall depict typical details of methods for protecting the critical root zone. If barriers are not feasible to keep away vehicles and foot traffic, use six to eight inches of wood chips spread over the root zone or bridge root area overlaid by plates of steel or other suitable material.

e. Grade Changes. If a grade change is unavoidable, retaining walls shall be used to protect the root system.

f. Severing Roots. Avoid cutting anchoring roots if possible. Tunneling for smaller household utility lines may be an option for tree preservation. When root cuts are unavoidable, the cuts shall be made with a pruning saw.

g. Above-Ground Injuries to Trees. Do not use trees for posting signs, electrical wires and pulleys. Keep trees free of nails, screws, and other fastening devices. Prevent trunk injuries by surrounding trunk with one-inch by four-inch wooden slats and securing in place with gauge wire around slats.

h. Soil Contamination. Altering the soil chemistry can result in weakened trees, making them more susceptible to insects and disease. Prevent adverse effects on soil chemistry by spreading heavy plastic tarping where concrete is to be mixed or sheet rock cut; do not clean paintbrushes and tools over tree roots; dispose of chemical wastes properly and do not drain onto soil.

i. Altering the Natural Drainage Course. When the natural drainage of a site is altered, watering for existing trees must be augmented by an irrigation system. Prior to site grading, prepare a site drainage plan. Sometimes surface water containment can sustain existing stands of trees without artificial irrigation.

Landscape plans or specifications shall note a requirement for the City to be notified within 24 hours of any damage to existing trees within the project area that were not approved for removal or relocation. If damage occurs during construction, the contractor shall employ a certified arborist to determine whether the damage may be repaired or the tree replaced according to City standard mitigation procedures.

12.2.2.2 Tree Removal and Relocation

Trees shall not be removed or relocated within the public ROW without approval from the City Engineer. The applicant shall submit a Tree Removal and Planting Permit application to the City of Bend that identifies number and type of trees to be removed, location of trees to be removed, reason for removal, and proposed planting mitigations. Approval for removal/relocation of the tree shall require approval from the City Engineer based on the following criteria: (1) the site cannot feasibly be developed, either by alternative site design or construction methods without removing or relocating existing trees; (2) trees left in their present location will be so undermined by construction that their viability is threatened to the extent they become a danger in the future; or (3) the existing location is determined to interfere with the clear vision standards, intersection sight triangles, and intersection sight distances (for traffic, bicycles, and/or pedestrians and causes a safety concern that may not be resolved by appropriate pruning or thinning).

Recommendations for removal, pruning or thinning must be made by a licensed landscape architect or certified arborist. Under no circumstances may a tree be "topped".

Existing trees approved for removal or relocation shall be clearly identified on the landscape plan. The City shall be notified 48 hours in advance of any approved tree removal activity.

12.2.3 Street Trees and Plants

Street trees shall be required to be located and planted with all public-ROW projects. They may be located within the ROW as indicated in 14.3.9, or located in the front yard setback or buffer area immediately adjacent to the ROW, as stated in the BDC Chapter 3.2.400, Street Trees. Deviation from this standard shall require approval from the City Engineer.

Trees and plant species selected for use in non-paved public ROW projects shall be selected for their durability, drought tolerance, proportionality to site circumstances, low maintenance, and clearance standards for pedestrian, bicycle, and vehicular traffic safety.

The publication titled "Water-wise Gardening in Central Oregon" by the Oregon State University Extension Service is recommended as a guidebook for plant selection. Copies of the publication are available at the City of Bend Utility Department and OSU Extension Service.

All trees and plants considered shall be hardy to USDA Zone 3 – 5 or 6b.

12.2.3.1 Approved Street Tree List

Proposed street trees shall be selected from BDC Chapter 3.2.400 Street Trees, unless otherwise approved by the Planning Director.

12.2.3.2 Non-approved Street Trees and Plants

Turf and artificial turf is prohibited in public ROW projects, but will be assessed by the City of Bend on a case-by-case basis.

12.2.3.3 Height Standards for Street Trees and Plants

On public ROW landscape projects without existing sidewalks, trees shall be located to accommodate future sidewalk locations with consideration for existing and future utility corridors.

Plants that will attain a mature height of two feet or more in height should not be planted in Clear Vision Areas, Intersection Sight Triangles, nor Sight Distance Areas. Refer to drawing R-2, Clear Vision Areas, and Part II, Section 3.3.4.3. The height of the plant shall include the adjacent curb height and any earthwork or grading within the plant bed.

Trees are not permitted to be planted within the Clear Vision Area, Intersection Sight Triangles, nor Sight Distance Areas. Existing trees shall be limbed to a minimum of 8 feet above the adjacent curb. This applies to center medians as well as roadside areas.

Only trees, 25-feet high or less, at maturity, shall be considered for planting under or within 10-lateral feet of any overhead utility lines.

12.2.3.4 Size of Street Trees and Plants

Minimum plant and tree sizes are to be determined by the BDC Chapter 3.2.300.

Shrubs shall be planted from two-gallon containers or larger.

The minimum caliper size of street trees at planting shall be two and one-half inches (2.5") DBH (diameter at breast height, or four feet above ground), based on the American Association of Nurserymen Standards. If the required caliper is not available, the Planning Director/Review Authority may accept replacement trees with an extended maintenance guarantee of two additional years depending on substituted size.

12.2.3.5 Street Tree Location and Spacing

Street trees must be planted within existing and proposed planting strips or in City-approved sidewalk tree wells on streets without planting strips. Street trees planted within sidewalk tree wells shall must be installed with a City-approved tree grate.

Where the landscape strip and/or sidewalk is not wide enough to accommodate street trees, the Planning Director may allow the street trees to be planted within five feet from the back of the sidewalk.

Where practical, small stature trees must be planted no closer to the curb or sidewalk than three feet, medium trees – three feet and large trees – four feet. Root barriers may be required with street tree planting to protect the City's curb and sidewalk.

Street tree spacing must be based upon the type of tree(s) selected and the canopy size at maturity. Small canopy trees and columnar shaped trees must be planted no further than 25 feet apart; medium and large canopy trees must be planted no further than 35 feet apart, except where planting a tree would conflict with existing trees, retaining walls, utilities and similar physical barriers. A random spacing of street trees may be approved for the equivalent number of trees required for the length of the frontage.

Trees should be spaced no less than the following distances from existing or planned infrastructure:

- Stop signs: 35 feet;
- Street lights: 25 feet;
- Non-street light utility poles: 5 feet;
- Property lines: 2 feet;
- Fire hydrants: 10 feet;
- Water meters or sampling manholes: 5 feet;
- Driveways, sidewalks, curbs, or alleys: 3 feet for small and medium trees, 4 feet for large trees;
- Traffic signs: 20'; and,
- Bus benches and shelters: 5'

Trees shall not be planted within the following areas:

- Clear vision areas;
- Intersection sign triangles;
- Sight distance areas;
- City water or sewer easements, unless approved by the City Engineer;
- Public utility easements, unless written approval is obtained from the applicable agenc(ies); or,
- Medians less than 4 feet wide.

12.2.3.6 Exemptions

Exceptions and/or exemptions to tree and plant location standards will be considered on a case-by-case basis, as approved by the City Engineer and/or Planning Director.

12.2.4 Standard Materials and Equipment

Designs shall incorporate materials and equipment that comply with the City of Bend Standards and Specifications. Alternative materials shall only be used when an approved Deviation from Standards and Specifications request has been submitted and approved.

12.2.4.1 Tree Wells

Street trees planted within sidewalk tree wells shall be installed within a pedestrian rated tree grate or surrounded by permeable pavers or pavement appropriate for pedestrian circulation. The minimum tree pit dimensions shall be a minimum of 108 cubic feet 4 ft. x 9 ft., minimum 3 feet deep, and a minimum surface dimension of 4 feet.

12.2.4.2 Soil Amendments

The City of Bend requires the use of organic soil amendments to improve soil structure and increase aeration, water penetration, and water retention for plant hydration when appropriate for the selected plant species. An agricultural soil analysis shall be required for all public works projects. Soil analysis shall include pH, N-P-K, SAR, ECe, boron levels, percolation rates and soil particle evaluation. The report shall include recommendations for amendments, fertilizers, application rates, and procedures for conditioning the soil. Soil amendments shall be tilled to an appropriate depth for the planting in order to prevent a layering of soil types. Existing native shrub zones shall not be disturbed by soil amendment processes.

12.2.4.3 Mulches

Organic mulch such as shredded bark or composted bark shall be applied to all planting areas for moisture retention, weed control, and moderation of soil temperatures.

Impermeable weed barriers made of plastic are prohibited under any mulches. Woven geotextile products are allowed under gravel or rock mulches.

The landscape plan shall identify the proposed type and recommended depth of installation for all proposed mulch materials.

12.2.4.4 Fertilizers

The landscape plan or specifications shall specify any additional fertilization requirements that may be necessary for the establishment of new plant material.

The landscape plan shall specify type and recommended application rate for each proposed use of any fertilizer recommendation that deviates from the Bend Standards and Specifications, Section 10130-Seeding, and Section, 01040-Planting, for approval by the City.

12.3 Irrigation Plan Submittals

Irrigation systems shall be designed to be efficient and to uniformly distribute water.

Specific criteria that shall be considered in designs include soil type, slope, root depth, plant materials, hydrozones, microclimate conditions, water source, peak precipitation rate demand, and watering windows.

To conserve and protect water resources, designs shall utilize appropriate equipment and components that meet the City of Bend Codes, Standards and Specifications. Irrigation designs should strive to design projects that are aesthetically pleasing, conserve water resources, and reduce required maintenance by City staff.

For capital improvement and development projects, the following design requirements shall be implemented in all design deliverables and submittals presented to the City of Bend for review.

An irrigation plan shall accompany the site/landscape plan and identify the location, type, and coverage of sprinklers, as well as drip lines, valves, zones, point(s) of connection and other equipment required to provide water as prescribed by the City of Bend as part of the submittal to the City for review and approval prior to installation. An irrigation plan is required for any public development where landscaping within the City of Bend right-of way is part of the improvements, either new or existing. Irrigation plans shall be in compliance with these standards and those set forth in OSS and in other Bend Codes, Standards, and Specifications.

See Chapter 2 for plan submittal requirements and City of Bend CAD Standards.

12.3.1 Design Parameters

Irrigation systems shall be designed to fully irrigate plant materials shown or specified on the site plan. System design should consider plant size and spacing at maturity to ensure long term effectiveness.

The minimum supply water pressure shall be based on information supplied by the water utility, field-verified and noted on the drawings.

Irrigation systems shall be designed to maximize efficient water usage based on existing and proposed site– specific topography, soils, site orientation, prevailing wind conditions, and micro-climates to eliminate the possibility of run-off and overspray, minimize evaporation, and increase the rate of infiltration. Overhead irrigation sprinklers shall be inset 3-5” from hardscape, curbs and sidewalks to prevent irrigation overspray and runoff onto adjacent surfaces. Ensure the irrigation system adheres to Bend Code 14.20 Use of Water and does not result in irrigation overspray or runoff onto adjacent hard surfaces.

Irrigation designs shall not mix rotary, fixed spray, bubblers, microsprays, drip, or subsurface irrigation methods on the same zone.

Provide separate irrigation zones for trees shrubs & groundcovers, and turf.

Fixed spray or rotary head irrigation may be used for “temporary irrigation zones”. Temporary irrigation is required to establish areas being revegetated with drought-tolerant and native plant species. Temporary irrigation systems shall be reviewed on a case-by-case basis and removed after the vegetation is established. Irrigation designs shall identify location, number of zones, and irrigation types proposed for any areas determined to be temporary irrigation zones.

Separate zones are required for permanent and temporary irrigation lines.

12.3.1.1 Safety

Run-off and/or over-spray from sprinkler heads shall be eliminated from streets and sidewalks by use of proper design principles and installation practices. Refer to Bend Code 14.20.030 Water Waste Defined for additional information about water waste.

To conserve and protect water quality, all landscapes and irrigation installations shall consider the conservation of resources, and protect native habitats and watersheds.

Irrigation designs shall utilize products that require the least amount of service, repair, and replacement. Buried vaults and valves should be located near areas with low pedestrian and vehicular traffic.

12.3.1.2 Hydrozones

The irrigation plan, in conjunction with the landscape plan, shall prevent over-watering and under-watering by implementing principles of "matched hydrozones." Refer to Section Part II, Chapter 12.2.1.3 for additional detail.

12.3.1.3 Hydraulic Calculations

Irrigation designs shall supply complete calculations for all irrigation zones (drip zones and spray zones separately). Supply a table showing the total water required for each zone to ensure that the design has not exceeded the maximum for the meter, proposed pipe size, and zone watering times.

12.3.2 Drip Irrigation Design

Use drip irrigation when practical and where potential for irrigation overspray and/or runoff is likely to occur. Drip irrigation systems shall be designed according to standards and engineering practices specified by the American Society of Agricultural and Biological Engineers or Irrigation Association. Systems should be designed to meet the changing water requirements of the landscape as it matures.

Drip irrigation is required where dimensions are less than six feet in any direction. Overhead irrigation in areas greater than six feet in dimension shall utilize low-precipitation rate sprinkler nozzles and have a precipitation rate of less than 1.0 inch per hour.

Drip irrigation systems shall be designed so that the drip emitters have an ‘Emission Uniformity’ (relative flow rate between like emitters) of at least 80 percent at time of installation.

12.3.3 Standard Materials and Equipment

Designs shall incorporate materials and equipment that comply with City of Bend Standard Specifications and OSS for Irrigation Systems, Section 01120. Alternative materials shall only be used when an approved Deviation from Standards and Specifications request has been submitted and approved. Materials shall be designated by trade name as per City of Bend Special Provisions or an approved equal, as verified from information in the manufacturer’s catalogue and shown to contain comparable components.

12.3.3.1 Irrigation Controllers

The City of Bend uses the current technology for programming and monitoring irrigation systems for landscape areas within the city to ensure the most efficient delivery of water to the public ROW. Irrigation controllers shall be EPA WaterSense labeled smart irrigation controllers that automatically adjust irrigation run times in response to environmental conditions.

12.3.3.2 Automatic Control Valves

Automatic electric solenoid remote control valves shall be slow acting diaphragm-type, as per Bend Standards and Specifications, 01120.17 Valves (h) Control Valves, (2) Automatic Control Valves.

12.3.3.3 Sprinkler Heads

Sprinkler heads shall provide coverage as specified in the manufacturer's design literature. The use of high efficiency sprinklers or nozzles is encouraged wherever practicable.

12.3.3.4 Pipe

ROW projects shall be entirely furnished with one pipe class or schedule type as per the Bend Standards and Specifications, and conforming to all other national and local standards.

12.3.3.5 Blowouts

A blowout connection point shall be installed to facilitate winterization by use of compressed air. Locate blowout connection immediately downstream from backflow device.

SECTION 2-13

Electrical Systems

Table of Contents

13. Electrical Systems 3
13.1 Applicable Codes, Standards, and Regulations 3
13.2 Hazardous and Corrosive Areas 4
13.3 Design Approach and Guidelines 4
13.3.1 Distribution System 4
13.3.2 Standby Power 5
13.3.3 Fire Alarm 5
13.3.4 Security System and Facility Access Control 5
13.4 Design Presentation 5
13.4.1 Legend 5
13.4.2 Site Plan 5
13.4.3 Process and Facility 6
13.4.4 Single-Line Diagrams 6
13.4.5 Motor Control Schematic Diagrams 6
13.5 Schedules 7
13.5.1 Details 7
13.5.2 Specifications 8
13.6 Design Criteria 8
13.6.1 Listed and Labeled Equipment 8
13.6.2 Calculations 8
13.6.3 Distribution Voltage 8
13.6.4 Utilization Voltage 8
13.6.5 Voltage Drop 9
13.6.6 Demand Factors 9
13.6.7 Metering 9
13.6.8 Branch Circuits 9
13.6.9 Panelboards 10
13.6.10 Motor Control 10
13.6.11 Equipment Identification 11
13.6.12 Raceways 11
13.6.13 Wire and Cable 11
13.6.14 Color Coding 12
13.6.15 Circuit Identification 12

13.6.16 Enclosures 13
13.6.17 Fiber-optic Cable 13
13.6.18 Grounding 13
13.6.19 Lighting 13
13.6.20 Street Lighting 14

13. Electrical Systems

General street lighting designs shall comply with City of Bend standards and the utility company providing the power guidelines. The designer shall coordinate the design with both entities prior to submission for plan approval.

NFPA 70 is the National Electrical Code (NEC) that has been adopted by the State of Oregon and the City of Bend. The State of Oregon Electrical Specialty Code is based on the NEC, with additions to and amendments of specific NEC Articles that are pertinent to the State of Oregon. Information on the Oregon Electrical Specialty Code and interpretations may be obtained from the Oregon Building Codes Division.

NFPA 820, Standard for Fire Protection in Wastewater Treatment and Collection Facilities, includes the hazard classifications of specific areas and processes. The hazard classifications coincide with mandatory NEC requirements for the design of electrical systems, equipment, and materials in areas and for processes classified as hazardous.

13.1 Applicable Codes, Standards, and Regulations

Codes are legal documents whose use is determined by the Authority Having Jurisdiction (AHJ). Requirements of the current NEC as amended by the current State of Oregon Electrical Specialty Code are to be satisfied in all electrical designs. Additional codes, the current versions of which apply to all electrical designs, include:

- NFPA 70E, Standard for Electrical Safety in the Workplace
- NFPA 101, Life Safety Code
- ANSI C2, National Electrical Safety Code
- International Building Code (IBC)
- International Fire Code (IFC)

Standards are recommendations that form design guidelines that are not legal in nature, but are considered “standard practice.” Standards organizations, the applicable current versions of which apply to all electrical designs, include:

- American National Standards Institute (ANSI)
- National Electrical Manufacturers Association (NEMA)
- Institute of Electrical and Electronics Engineers (IEEE)
- Instrument Society of America (ISA)
- Insulated Cable Engineers (ICEA)
- American Society for Testing and Materials (ASTM International)
- Underwriters Laboratories, Inc. (UL)
- Illuminating Engineering Society (IES)
- National Electrical Contractors Association (NECA)
- International Electrical Testing Association (NETA)

Regulations are legal design standards that must be incorporated into designs. Regulations, the applicable sections of which apply to all electrical designs, include:

- Occupational Safety and Health Act (OSHA)
- Americans with Disabilities Act (ADA)

13.2 Hazardous and Corrosive Areas

Hazardous areas and processes are classified in NFPA 820. The classification tables include a description of the location and function; the fire and explosion hazard; ventilation requirements if the initial classification is to be reduced; extent of the classified area; NEC area electrical classification (all Class I, Group D) with “Division 1”, “Division 2”, or “Unclassified” listed as applicable; materials of construction for buildings or structures; and fire protection measures. Hazardous area classifications (Class, Division, Group) are to be noted on applicable electrical drawings with the requirement to “furnish, install, and connect electrical devices and materials in these areas per NEC Article 501 (Class I locations) requirements.”

For all hazardous areas the designer shall specify type 316 stainless steel, NOT type 304 stainless steel, for all interior and exterior corrosive and/or wet areas. All hardware necessary to install electrical systems including supports and fasteners shall be 316 SST. Note on applicable electrical drawings those areas that are corrosive and/or wet with the requirement to “furnish, install, and connect electrical devices and materials in these areas per NEC Article 300.6 (protection against corrosion and deterioration) requirements.”

13.3 Design Approach and Guidelines

The electrical design shall satisfy all code requirements, and when codes, standards, or regulations conflict, the design is to comply with the more stringent requirements.

13.3.1 Distribution System

The facility power distribution system voltage shall be based on the connected load and what is available from the electric utility. Available electric service voltages are:

- 480Y/277 volts, 3-phase, 4-wire
- 480 volts, 3-phase, 3-wire
- 240/120 volts, 3-phase, 4-wire
- 240 volts, 3-phase, 3-wire
- 120/240 volts, 1-phase, 3-wire

The electric service up to 200 amps is required to be routed through a utility revenue meter box and socket. Above 200 amps, a separate electric utility current transformer (CT) cabinet is required with secondary conduit to the meter box and socket.

On the load side of the meter box or CT cabinet, provide a main circuit breaker located in either a separate enclosure or a motor control center (MCC) lineup. The main circuit breaker and its enclosure or MCC compartment are required to be UL labeled “suitable for use as service equipment.”

A standby power supply or provisions for standby power is required. Provide a transfer switch on the load side of the main circuit breaker, which is connected to the electric utility “normal” power source and when the “normal” power source is de-energized, can be switched to an “alternate” power source standby engine generator. The transfer switch enclosure shall be individually mounted or included in an MCC lineup.

On the load side of the transfer switch, provide the electric load power control equipment; for example, motor starters [and power factor correction capacitors (PFCCs) as applicable]; adjustable frequency drives (AFDs), power panelboards, feeder circuit breakers, etc. The power control equipment shall be either in individual enclosures or in a MCC lineup.

13.3.2 Standby Power

Provide standby power at all pump stations, reservoirs, etc., unless directed otherwise by the City Engineer in writing. The standby “alternate” power source shall be a stationary standby engine generator hardwired to an automatic transfer switch (ATS). An uninterruptible power supply (UPS) is another “alternate” power source, which relies on rechargeable batteries, to power critical panelboards for instrumentation, control, and supervisory control and data acquisition (SCADA) systems.

Standby engine generators shall be diesel-fueled with a subbase fuel tank under the engine generator skid inside an overall sound-attenuated, weatherproof enclosure. Natural gas or propane may also be used, depending on availability and Owner preference.

13.3.3 Fire Alarm

If directed by the Owner, provide a system with fire alarm control panel, addressable ionization smoke or infrared sensors, manual pull stations, and alarm strobe light/horns with provisions to activate an automatic telephone dialer to alert the local fire department.

13.3.4 Security System and Facility Access Control

Security systems shall consist of a door key pad, which activates the door lock. Magnetic door switches are provided in the door frame and door at the top of the door to alarm when the door is forced opened without key pad authorization. Doors shall also have a key lock.

13.4 Design Presentation

13.4.1 Legend

Provide an electrical legend and abbreviations drawing. If a standard legend and abbreviations are used, edit out all symbols and abbreviations that are not applicable to the design. If new symbols or abbreviations are used on the drawings, add them to the legend and abbreviations.

13.4.2 Site Plan

Provide an electrical site plan that locates the electric service entrance equipment and existing and/or new equipment provided by the electric utility to provide electric service to the facility. Show the routing of the electric utility service (overhead or underground) to the service entrance equipment. Show stationary standby engine generator or mobile standby engine generator receptacle, all exterior electrical loads (pumps, odor control equipment, etc.), control and/or instrumentation devices, site lighting, receptacles (remote from a building or outdoor control panel), etc., and the routing of underground conduits to them.

13.4.3 Process and Facility

Provide building process and facility plan(s) and/or exterior pump wet well process and facility plans(s) with associated freestanding control panel(s). On process plans, show the location of the electric service entrance equipment (utility meter and main circuit breaker), automatic transfer switch, MCC and/or individually mounted motor starters (and PFCCs), AFDs, panelboards, transformers, etc. On facility plans, show the location of heating, ventilating, and air conditioning (HVAC) equipment, indoor and outdoor luminaires, light switches, telephone terminal cabinet or mounting panel, other non-process equipment, etc.

13.4.4 Single-Line Diagrams

Provide a single-line diagram that schematically shows power source(s) and electrical loads. Power source items include the normal (utility) power source and utility metering, service entrance main circuit breaker, standby power source engine generator or mobile standby engine generator receptacle, standby power source circuit breaker, ATS or MTS, surge arrester [transient voltage surge suppressor (TVSS)], and local metering. Electrical load items include motor starters (and PFCCs), AFDs, feeder circuit breakers, stepdown transformers, panelboards, etc.

Some ATSs are available with normal and standby molded case thermal magnetic circuit breakers, load-side metering, and have a UL “suitable for use as service equipment” label. These service entrance ATSs are acceptable instead of separate main and standby circuit breakers, ATS, and metering. All of the above items may be shown in individual enclosures or in a common MCC lineup.

Show all circuit breaker ratings and combination circuit breaker NEMA full-voltage starter sizes. Provide molded case motor circuit protector (instantaneous-trip) type circuit breakers shown “XX/M”, where “XX” is the current rating, for motor starters for motors up to 60 horsepower. Provide molded case thermal magnetic type circuit breakers for motor starters for motors larger than 60 horsepower and for all other circuit breakers. For metering, provide a switched voltmeter and ammeter or digital power meter.

13.4.5 Motor Control Schematic Diagrams

Provide motor control motor starter and/or AFD schematic control diagrams that include the motor starter/AFD circuit breaker; all control functions and interfaces, and the motor connection. Use the basic combination motor starter and/or AFD control diagram and add additional control features as required. Refer to Subsection “Design Criteria/Motor Control” for additional requirements.

Additional control features shall include interlocks between motor starters/AFDs to allow operation of less than the total number of pumps when the standby power source is powering the facility. Additional features may include a Flygt MiniCAS thermal/ moisture module or equivalent by other suppliers and motor connections, motor shutdown, reset, and alarm light for motor high temperature, and alarm light for motor moisture detection. Additional features may include an ON/OFF/AUTO selector switch with provisions for automatic operation from an ultrasonic (Siemens/Milltronics) level sensor. Additional features may also include a manual or automatic AFD bypass motor starter in case the AFD fails.

Motor starter/AFD status lights shall include a red “MOTOR RUNNING” and amber alarm lights. Status and alarm lights should be the push-to-test LED type. Motor starter/AFD output alarms to an automatic phone dialer or SCADA system should include “NOT IN AUTO,” “OVERLOAD SHUTDOWN”, “MOTOR HIGH TEMPERATURE SHUTDOWN”, “MOISTURE IN MOTOR,” and “AFD FAIL” alarms as applicable.

Submersible pump switch rated disconnect switch receptacles and plugs shall be manufactured by Meltric Corporation, Franklin, WI, and shall be used for disconnecting and removing submersible pumps. Specify the receptacles/plugs on the Motor Control Schematic Diagrams. On the site or wet well plan, mount the receptacles 24 inches above the top of the wet well top slab to a mounting structure near the submersible pump(s) access hatch. Core drill a hole through the top of the precast concrete wet well top. The hole must be slightly larger than the plug diameter. Note on the site plan to provide an O.Z./Gedney Type CSBE Segmented Conduit Sealing Bushing to seal the submersible pump power/control cable penetration through the top slab into the wet well.

13.5 Schedules

Provide schedules for luminaires, manholes/handholes, and ultrasonic level sensor settings as required. Recommended luminaire schedule column headings include:

- Symbol and type number
- Input voltage (120V, 277V, etc.)
- Input Watts (includes ballast and luminaire)
- Description of luminaire
- Manufacturer and model number used as basis for design
- Lamp quantity, type (fluorescent, HPS, etc.), and color temperature or wattage
- Mounting (wall, ceiling, pendant, etc.)

Manhole/handhole column headings include:

- Manhole/handhole tag number
- Minimum inside dimensions (L, W, H)
- Drawing where manhole/handhole is located
- Manufacturer and catalog number

Ultrasonic controller (ULC) pump start/stop and alarm setpoint headings include:

- Pump/alarm identification (wetwell overflow, wetwell high level, lead pump on, lag pump on and alarm, etc.)
- ULC setpoint relay number
- Wet well elevation
- Remarks (pump start, alarm, etc.)

13.5.1 Details

Provide details as required to show underground conduit installation, conduit/cable penetration through the concrete slab, equipment pad (for MCC), pole-mounted site light,

pedestal mounting frame for submersible pump disconnect receptacles, etc. Provide additional project-specific details as required.

13.5.2 Specifications

Edit the standard electrical specifications as required for the specific project. Delete equipment, materials, and installation that are not applicable to the specific project. Add requirements for additional equipment, materials, installation, etc., as required.

13.6 Design Criteria

13.6.1 Listed and Labeled Equipment

Materials and equipment shall be specified and installed in accordance NFPA 70, the NEC. Materials and equipment shall be labeled or listed by a nationally recognized testing laboratory or other organization acceptable to the AHJ, in order to provide a basis for approval under the NEC. Materials and equipment manufactured within the scope of standards published by Underwriters Laboratories, Inc., shall conform to those standards and shall have an applied UL listing mark or label.

13.6.2 Calculations

Calculations shall be made and documented for each project to establish electrical equipment current and circuit breaker ratings and conductor and conduit sizes. Based on full-load current ratings provided by process and facility equipment suppliers, calculate the size of power conductors and conduits to the equipment per the NEC Chapter 9 tables for the specified conductor and conduit types. Using NEC Article 430.24, calculate the size of the main power conductors and conduits to the electrical equipment that powers the process and facility equipment. Using NEC Article 430.62, calculate the current rating of the electrical equipment main service entrance circuit breaker and ATS or MTS.

13.6.3 Distribution Voltage

The project distribution voltage is established to some extent by the project equipment horsepower requirements and the voltage available at the project site by the local electrical utility. The utility may only have 120/240-volt, single-phase power available in residential or rural areas, and 3-phase power (480Y/277V or 240/120V) available in urban industrial areas. Because it is desirable to keep equipment current requirements low to reduce wire sizes, a rule of thumb would be for a 120/240-volt single-phase 3-wire or 240/120-volt, 3-phase, 4-wire electric service to provide up to a service rating of 100 to 200 amps. Electric service ratings at 480Y/277 volts, 3-phase, 4-wire when available are satisfactory at any reasonable electric service current ratings. Although the utility service is listed at 480Y/277 volts, 3-phase, 4-wire with grounded neutral, the actual electric utility service voltage at the project electric service connection shall be 480 volts, 3-phase, 3-wire; neutral not required.

13.6.4 Utilization Voltage

The utilization voltage on pump station, reservoir, etc., projects is the same as the distribution voltage. For projects powered at 480 volts, 3-phase, 3-wire, low-voltage instrumentation and control, facility, lighting, and receptacle circuits should be powered

from a 208Y/120 volt, 3-phase, 4-wire panelboard via a 480-208Y/120 volt transformer to minimize voltage unbalance.

13.6.5 Voltage Drop

Branch circuit voltage drop calculations, where required for heavily loaded and/or long feeder and/or branch circuit distances, shall comply with NEC Article 210.19(A)(1), Exception No. 2, Fine Print Note (FPN) No. 4, which states:

> Conductors for branch circuits as defined in Article 100, sized to prevent a voltage drop exceeding 3 percent at the farthest outlet of power, heating, and lighting loads, or combinations of such loads, and where the maximum total voltage drop on both feeders and branch circuits to the farthest outlet does not exceed 5 percent, provide reasonable efficiency of operation.

Make a voltage drop calculation for motor starting whenever an individual motor exceeds 20 percent of the serving transformer capacity.

13.6.6 Demand Factors

General guidelines for electrical load demand factors are as follows:

- Lighting 1.0 x connected load
- Emergency lighting 1.0 x connected load
- HVAC equipment 1.0 x connected load
- Sump pumps 0.5 x connected load
- Convenience receptacles 180 VA each
- Process loads 1 x full load amps of non-standby loads plus 25% of largest motor

Provide 10 to 20 percent spare capacity at MCCs and panelboards.

13.6.7 Metering

The electric utility revenue meter is provided by the electric utility for installation in a meter socket and box provided as part the project design. On the line side of the ATS or MTS, provide a voltmeter and 4- or 7-position selector switch with line-to-line, line-to-neutral, and OFF positions and an ammeter and 3- or 4-position selector switch with line and OFF positions. A digital power meter with the same measuring capabilities as the voltmeter and ammeter may be provided instead of the meters.

13.6.8 Branch Circuits

General guidelines for branch circuits are as follows:

- Use the connected load and NEC requirements for sizing branch circuit breakers, conductors, and conduits.
- Use a minimum wire size of No. 12 American Wire Gauge (AWG) copper for lighting and receptacle branch circuits. Use No. 10 AWG wire when voltage drop requires a larger conductor on lighting circuits, and when receptacle circuits are longer than 75 feet.

- Where electronic ballasts are specified for fluorescent or high-intensity discharge lighting, provide a dedicated neutral for each lighting circuit; NO common neutral for multiple lighting circuits.
- In general, lighting branch circuit loads shall be limited to 1,500 watts.
- Light and receptacle branch circuits shall not be combined.
- The number of convenience receptacles on any one branch circuit shall be limited to five duplex receptacles rated 120V, 20 amps. Where weatherproof, ground fault circuit interrupter (GFCI) duplex receptacles are required, each receptacle shall be a GFCI receptacle. GFCI feed through receptacles shall not be used.

13.6.9 Panelboards

General guidelines for panelboards are as follows:

- The panelboard and branch circuit breakers shall be identified by branch circuit or feeder homeruns shown on the drawings.
- Each panelboard shall be equipped with a minimum of 20 percent spare branch circuit breakers with spaces, bus work, and terminations to complete the standard size panelboard.
- Prepare panelboard schedules that include identification of the device powered by the branch circuit, protective device trip rating, number of poles (branch circuit breaker), load in volt-amps by phase, rating of main lugs or main circuit breaker, neutral bus size, ground bus size, and integrated short circuit rating of the panelboard.
- Provide a separate panelboards for instrumentation and control (I&C) devices and field panels, if needed.

13.6.10 Motor Control

Refer to Subsection “Design Presentation/Motor Control Schematic Diagrams” for content, and prepare motor control diagrams per these requirements:

- Prepare elementary (ladder type) control diagrams for each motor showing wiring, pilot devices, auxiliary contacts and external connections. A single control diagram may be used for more than one motor having the same control.
- Use electrical symbols shown on the electrical legend sheet. Identify each component with a unique letter or name. Show wiring and devices inside the controller (motor starter or AFD MCC compartment or separate enclosure) with solid lines, and wiring and devices remote from the controller with dashed lines. Indicate the location of remote devices by symbol or description.
- Show remote control assemblies that have complex internal wiring as dashed rectangles. Identify only the interconnecting terminals or interface, and reference the location of the remote control assembly or who is responsible for the internal wiring.

13.6.11 Equipment Identification

Instrumentation and control (I&C) process and instrumentation diagrams (P&IDs) are required unless directed otherwise by the City. Use P&ID tag numbers for motors, I&C devices, and other process equipment shown on electrical drawings. Use this same numbering method to create unique tags for major electrical equipment.

If I&C P&IDs are not required, develop unique tag numbers for process, facility, and electrical equipment using abbreviations from the Abbreviations List on the Electrical Legend & Abbreviations Drawing and a unique number suffix as needed [for example, MCC, ATS or MTS, EF (exhaust fan), P1 (Pump No. 1), P2, etc.].

13.6.12 Raceways

Inside buildings and electrical control panels, route power, control, and instrumentation circuits in rigid galvanized steel conduits. Outdoors direct buried conduits, conduits under slabs, conduits concrete-encased in slabs, and conduits exposed in wetwells shall be:

- Schedule 40 PVC for power and 120-volt control circuits and fiber optic cables.
- PVC-coated rigid steel for low control (less than 120V) and analog circuits.
- Schedule 40 PVC for all exposed conduits in wetwells and channels.

General guidelines for raceway sizing, selection, and installation are as follows:

- Base conduit sizing on THW insulated conductors.
- Use these minimum conduit sizes:
  - 3/4-inch diameter for conduit installed exposed on walls and ceilings
  - 3/4-inch diameter for conduit concealed in frame construction and finished ceilings
  - 1-inch for conduit embedded in masonry, encased in concrete, and underground
- Route raceways exposed in process areas.
- Use PVC-coated rigid galvanized steel conduit for the transition from underground direct burial PVC, underslab PVC, and concrete-encased PVC. The galvanized steel transition section shall extend from 1 foot below grade or top of floor slab or the last foot of conduit in the floor slab, to 6 inches out of the floor slab, concrete encasement, or above grade connection.
- Limit the number of conduit bends to an equivalent of 270 degrees in long runs without pullboxes.
- Identify underground conduit routes with nonmetallic warning tape underground above the direct buried conduits.

13.6.13 Wire and Cable

General guidelines for wire and cable are as follows:

- Use stranded copper conductors for all except lighting and receptacle wiring. Use solid copper conductors #10 AWG or #12 AWG for lighting and receptacle wiring.

- Use #14 AWG as the minimum conductor size for individual 120-volt control circuits.
- Use #12 AWG as the minimum conductor size for 120-volt control circuits routed in a common conduit with the power conductors to the motor circuit controls at the motor. Combine individual motor circuit power and control conductors in a common conduit up to a maximum power conductor size of #2 AWG.
- Under normal conditions, limit the maximum wire size to 500 kcmil. Use parallel conductors for circuits requiring greater capacity.
- Combine 120-volt control circuits in 600 volt multiconductor control cables containing multiple #14 AWG stranded copper conductors. Use control cables where grouping control circuits is practical and the number of individual wires exceeds six conductors. When selecting control cable size, provide 25 percent spare (plus or minus 10 percent) conductors.

13.6.14 Color Coding

Conductor insulation colors shall be as shown below:

System	Conductor	Color
All systems	Equipment grounding	Green
120/240 volts	Grounded neutral	White
Single-phase, 3-wire	One hot leg Other hot leg	Black Red
208Y/120 volts	Grounded neutral	White
3-phase, 4-wire	Phase A Phase B Phase C	Black Red Blue
240/120 volts	Grounded neutral	White
3-phase, 4-wire	Phase A	Black
Delta, center tap	High (wild) leg	Orange
Ground on single-phase	Phase C	Blue
480Y/277 volts	Grounded neutral	White
3-phase, 4-wire	Phase A Phase B Phase C	Brown Orange Yellow

13.6.15 Circuit Identification

Circuit names shall be based on the device or equipment at the load end of the circuit. The circuit shall be identified at each termination and in accessible manholes, handholes, and pull boxes. Use plastic sleeves for conductors #3 AWG and smaller, and plastic marker plates for larger conductors. For lighting and receptacle circuits, the panel and circuit number shall be identified at each luminaire and receptacle.

13.6.16 Enclosures

General guidelines for electrical equipment enclosure types are as follows:

- NEMA 1 – Equipment in electrical rooms and finished areas
- NEMA 12 – Equipment in dry industrial locations
- NEMA 4X (Type 316 Stainless Steel) – Equipment in wet and/or corrosive locations
- NEMA 7 –Equipment in Classified hazardous locations

13.6.17 Fiber-optic Cable

Where used, provide fiber optic cabling in 2-inch-diameter conduit, minimum, and provide large radius conduit bends to prevent breaking fibers in the fiber optic cable.

13.6.18 Grounding

Provide a ground ring around the building and stationary standby engine generator equipment pad or the electrical control panel equipment pad at the site. The ground ring shall consist of a #6 AWG bare copper ground wire and at least two ground rods. Connect conductors from the ground grid to each end of the MCC ground bus and the neutral of any 208Y/120-volt distribution transformer secondary. Ground rods shall be 3/4-inch in diameter by 10 feet long copper-clad steel installed 20 feet apart, minimum. If bedrock is encountered, the ground rod must be installed by drilling a 4-inch-diameter hole and installing the ground rod in a graphite-based grout backfill material.

Provide a separate ground conductor sized in accordance with NEC requirements in raceways for power feeders and branch circuits for power, control, lighting and receptacle circuits.

13.6.19 Lighting

Provide interior and exterior areas with lighting. Interior lights shall include switched lights, emergency egress standby lights, and exit lights if required. Emergency standby and exit lights will each include a battery charger and battery. Exterior lighting shall include photocell-controlled or switched lights mounted on buildings near doors or on poles or structures. Design must comply with City light pollution reduction standards.

Fluorescent luminaires shall be used in all interior locations. Fluorescent “enclosed and gasketed” luminaires of non-metallic construction shall be used for applications in damp, wet, or corrosive locations or locations exposed to the weather and unprotected and shall be specified to be UL labeled “suitable for wet locations.”

High-pressure sodium (HPS) luminaires shall be used for all exterior lighting. Luminaires shall be powered at 120 volts and controlled by a photocell. Exterior lighting shall have sharp cutoff shrouds to limit the migration of light. Exterior lighting shall be controlled by an ON/OFF/AUTO selector switch and roof- or wall-mounted photocell. In the AUTO mode, lights turn on at dusk and off at dawn via the photocell.

13.6.20 Street Lighting

13.6.19.1 General

As part of the public improvement process, a street illumination design shall be included with all project plans submitted to the City, as well as a power plan from the utility company providing the power. The street illumination design shall clearly show where the luminaires, conduit runs, junction boxes, service cabinets, and power sources will be located. Design must comply with City light pollution reduction standards.

13.6.19.2 Conduit Size

Conduits shall be sized according to the requirements of the NEC current edition.

All conduit runs shall be as direct from point to point as possible, shall remain within the rights-of-way, and maintain as straight an alignment as possible.

The minimum conduit size shall be one inch. All conduits under the roadway shall be a minimum of 2- inches in diameter. Conduits placed on Pacific Power utility poles will require ‘stand-off’ mountings and need to be specified in whole inch diameters. All conduit runs shall be clearly indicated on the plans showing the route from the power source (typically a vault) to the street light.

A junction box shall be included at each end of roadway conduit crossings.

13.6.19.3 Conductor Size

A catalog cut sheet with maximum starting and operating amperages information shall be included in the plans submittal to verify the wire sizing calculations.

A circuit diagram and load calculations shall be included on the plan sheets at the end of the lighting construction drawings.

The maximum voltage drop shall be two percent from the utility to the service equipment and three percent from the service to the farthest load.

Any suitable method for calculating voltage drop and conductor sizes may be used. Provide reference to any source of information.

Junction boxes shall be placed near the base of each light pole. If the power source is within twenty feet of the street light, this junction box will not be required. All junction boxes used for the street lighting system shall have the words STREET LIGHTING displayed on the metal lid.

All electrical conductors shall be THWN with a minimum size of Number 12 AGW. A continuous, ground/bonding wire shall be used in all raceways (conduits) and sized according to the Code requirements.

SECTION 2-14

Instrumentation and Control Systems

Table of Contents

14. Instrumentation and Control Systems 2
14.1 Scope 2
14.1 References – City of Bend Standard Specifications 2
14.2 Design Deliverables 2
14.2.1 Legend 2
14.2.2 Process and Instrumentation Diagrams 2
14.2.3 Process Control Functional Narratives 3
14.2.4 PLC I/O List 4
14.2.5 Control System Block Diagram 4
14.2.6 Sample Loop Drawings 5
14.2.7 Instrument List 5
14.3 Design Criteria 5
14.3.1 Enclosures 5
14.3.2 PLC I/O Special Requirements 6
14.3.3 Typical PLC I/O at Remote Station Facilities 6
14.3.4 Tag Numbering 7
14.3.5 Network Communication 7
14.3.6 Radio Pathway Study 8
14.3.7 Instruments and Components 8
14.3.8 Testing Requirements 8

ATTACHMENT 1 - SAMPLE P&ID
ATTACHMENT 2 – SAMPLE PROCESS CONTROL NARRATIVE
ATTACHMENT 3 – SAMPLE PLC I/O LIST
ATTACHMENT 4 – SAMPLE LOOP DRAWING

14. Instrumentation and Control Systems

14.1 Scope

This document is intended to provide guidance for pump stations, reservoirs, and other remote station facilities with process control functions. HVAC systems are exempt, except when required by the City Engineer.

14.1 References – City of Bend Standard Specifications

Refer to the following City of Bend standard specifications for additional requirements:

- Section 01 91 14B –Equipment Testing, Facility Startup, and Commissioning
- Section 40 91 00 –Instrumentation and Control Components

14.2 Design Deliverables

14.2.1 Legend

Provide an I&C legend drawing to identify all P&ID symbols and abbreviations used on the project. The legend shall include at minimum all graphical symbols used for major equipment (pumps, motors, valves, instruments, vessels, etc.), a summary of flow streams used on P&ID process piping, a table to define the unit process numbers used on the project, a line legend to identify the uses of different line types on the P&IDs, and a table to identify all abbreviations used on the P&IDs (PLC, UPS, etc).

If a standard legend drawing is used, remove all symbols and abbreviations that are not applicable to the design. If new symbols or abbreviations are used on the drawings, add them to the legend and abbreviations.

14.2.2 Process and Instrumentation Diagrams

Provide complete P&IDs for the project. If multiple P&ID drawings are required, organize them by site, facility, or process. Show process flow from left to right.

P&IDs shall include the following minimum data:

- Major process components, vessels, and piping
- Equipment tags and descriptions for all major process components and vessels
- Flow stream identification on all process piping
- Flow directional arrows on all process piping

- Text next to each pump and motor to identify it as adjustable speed (AS) or constant speed (CS)
- Fail position of all valves (FO = fail open, FC = fail closed, FLP = fail last position)
- All major instruments identified by a tagname consisting of Instrument Society of America (ISA) instrument code, unit process number, and loop number (includes analytical, flow, level, pressure, and temperature instruments, as well as handswitches and indicating lights)
- Power supply voltage for all major process components, instruments, and panels
- Adjustable frequency drives
- All handswitches and indicating lights mounted on MCC bucket doors, control panels, and field control stations
- PLC I/O:
  - Use graphical symbols to differentiate between analog inputs, analog outputs, discrete inputs, and discrete outputs. Identify the I/O function with text (ON, FAIL, RUN, FLOW, PRESSURE, etc.).
  - Show signal lines between the I/O point graphical symbols and the interfacing field equipment. Use a different line type to differentiate between analog and discrete signals.

14.2.3 Process Control Functional Narratives

Provide written process control functional narratives to define all control system software functions to be programmed by the system integrator. Organize the process control functional narratives by site, facility, unit process and loop number. Include the following minimum information:

- Provide a written summary of the control loop operation, including field interlocks that affect software control of equipment
- Define all data to be displayed at the graphical interface, including but not limited to equipment status, alarms, and process variables
- Define all operator controls to be provided at the graphical interface, including user setpoints, selectors, and pushbuttons
- Define all calculations to be performed by the control system software
- Define all equipment software interlocks
- Define all alarms to be generated and displayed
- Identify the priority of all alarms generated by the system
- Define all data to be communicated between PLCs via networks or radio (peer data via message blocks)

14.2.4 PLC I/O List

Provide a list to summarize all PLC inputs and outputs associated with the project. For each control panel, summarize the quantity of each I/O type used on the project (# of analog inputs, # of analog outputs, # of 24VDC discrete inputs, etc). The list shall include the following minimum data:

- **Software tag –** Identify the software tag to be used in the graphical interface software. The software tag shall include the ISA component code or equipment abbreviation, unit process number, loop number and software function.
- **I/O type**
  - AI for analog input
  - AO for analog output
  - DI-24 for discrete input, 24VDC
  - DI-120 for discrete input, 120VAC
  - DO–24 for discrete output, 24VDC
  - DO-120 for discrete output, 120VAC
  - ENT-AI for Ethernet-communicated analog input
  - ENT-AO for Ethernet-communicated analog output
  - ENT-DI for Ethernet-communicated discrete input
  - ENT-DO for Ethernet-communicated discrete output
- **I/O module –** Identify the part number of the I/O module to which the point is wired.
- **Description –** Provide a description of the equipment or system to which the I/O point is related. For example, “well pump 1,” “wetwell level,” or “pump 1 flow.”
- **ON state –** For discrete I/O points, provide a text description to identify the meaning of the point when it is energized in the software. For example, “RUN,” “HIGH,” “OPEN,” or “ON.”
- **OFF state –** For discrete I/O points, provide a text description to identify the meaning of the point when it is de-energized in the software. For example, “STOP,” “NOT HIGH,” “CLOSED,” or “OFF.”
- **Range –** For analog I/O points, provide the numerical range over which the value will change. For example, “0-100%,” “1-14 (pH)”, or “0-3000 gpm.”
- **Physical location**
  - **Rack –** The PLC rack in which the I/O module is located
  - **Slot –** The rack’s slot location of the module to which the I/O point is wired
  - **Point –** The point number on the module to which the I/O point is wired

14.2.5 Control System Block Diagram

If network or radio communications are used on the project, provide a control system block diagram to show connectivity of all communication system components, including network switches, media converters, communication modules, and terminating resistors. Identify the destination of communication lines that interface with the project components but are outside the project scope (for example, radio communications to an existing repeater).

Distinguish between different types of communication media (fiber optic cable, CAT5 or CAT6 copper, coaxial cable, etc.) using different line types or text. Identify all network addresses on the drawing, including station radio addresses and Ethernet network Internet Protocol (IP) addresses. Note that it may be necessary to coordinate with the City's IT staff for network address assignments.

14.2.6 Sample Loop Drawings

Detailed loop drawings shall be generated by the general contractor's system integrator based on samples provided in the design documents. Provide sample loop drawings to demonstrate City of Bend standard wiring concepts, drawing format, and level of detail. Major concepts to be included in the loop drawings include the following:

- I/O location, including PLC, rack, slot, point number, and I/O module part number
- Wire and cable tag
- Wire color
- I/O point software address, equipment description, and ON state description (for discrete I/O) or range (for analog I/O)
- Terminal block identifier and terminal number
- Associated circuit protection (circuit breakers and fuses)
- Analog signal cable shielding
- All associated terminations at PLC panel and field components

14.2.7 Instrument List

Provide an instrument list to identify the required parameters for all instruments associated with the project. Include the instrument type, instrument tag number, and loop description for all instruments, and organize the list by unit process and loop number. Provide the measurement range for all analog instruments. Provide initial setpoints or mounting elevations for all switches.

14.3 Design Criteria

14.3.1 Enclosures

14.3.1.1 General

Where enclosures contain voltages exceeding 120VAC, provide a main circuit breaker disconnect interlocked with the panel door. All enclosures shall be UL Listed.

14.3.1.2 Outdoor Application

Provide lockable stainless steel enclosures mounted on a shade structure for all outdoor applications. Include specification text requiring panel fabricators to provide enclosure temperature control for the following environmental conditions to protect temperature-sensitive components located inside the panel:

- Ambient temperature range: Minus 5-degrees F to 110-degrees F
- Protected from direct overhead mid-day sunlight and falling rain/snow by overhead shelter
- Exposed to wind, blowing rain, and blowing snow
- Exposed to morning and evening sun

Provide all operator indication and control devices on an inner door (behind the lockable door). At wastewater pump stations, a flashing alarm beacon shall be provided on top of the enclosure.

14.3.1.3 Indoor Application

Provide NEMA 12 enclosures in indoor dry locations. Provide NEMA 3R enclosures in normally dry indoor locations where pipe breakage could result in water spray onto the panel.

14.3.2 PLC I/O Special Requirements

14.3.2.1 Discrete Inputs

Use 24VDC for all discrete inputs.

14.3.2.2 Discrete Outputs

Use dry contact output modules dual rated for 24VDC and 120VAC. Use 24VDC for discrete outputs, where possible, but it is acceptable to use PLC discrete output module dry contacts in 120VAC motor control circuits.

14.3.2.3 Analog I/O

Use 4-20mA current signals for all PLC analog I/O.

14.3.2.4 Spares

Provide at least 25 percent spare points for each I/O type used. Provide a minimum of three spares for analog I/O types and eight spares for discrete I/O types.

14.3.3 Typical PLC I/O at Remote Station Facilities

14.3.3.1 Common I/O for All Remote Stations

Provide the following PLC I/O at all remote stations:

- DI: Utility Power FAILURE
- DI: 24VDC Power Supply FAILURE

14.3.3.2 Typical PLC I/O at Wastewater Lift Stations

Provide the following minimum PLC I/O at all wastewater lift stations:

- AI: Wetwell LEVEL
- AI: Lift Station Effluent FLOWRATE

- DI: Wetwell Level HIGH-HIGH
- DI: REMOTE control mode for each lift station pump
- DI: ON status for each lift station pump
- DI: FAIL status for each lift station pump

14.3.3.3 Typical PLC I/O at Freshwater Reservoirs

This shall include flow meters in and out. Provide the following minimum PLC I/O at all freshwater reservoirs:

- AI: Reservoir LEVEL

14.3.3.4 Typical PLC I/O at Freshwater Pump Stations

Provide the following minimum PLC I/O at all freshwater pump stations:

- AI: Pump Station Effluent FLOWRATE
- DI: REMOTE control mode for each lift station pump
- DI: ON status for each lift station pump
- DI: FAIL status for each lift station pump

14.3.3.5 Typical PLC I/O at Freshwater Wells

Provide the following minimum PLC I/O at all wastewater lift stations:

- AI: Well LEVEL
- AI: Well Effluent FLOW
- AI: Chlorine Residual
- DI: REMOTE control mode for each well pump
- DI: ON status for each well pump
- DI: FAIL status for each well pump

14.3.3.6 Typical PLC I/O at Pressure Monitoring Stations

Provide the following minimum PLC I/O at all pressure monitoring stations:

- AI: System PRESSURE

14.3.4 Tag Numbering

Provide tag numbers for all major process components and instruments. All tags shall include unit process number and loop number. Process component tags shall include a component code to identify the type of equipment (example: “P” for pump, “M” for motor). Instrument tags shall include the ISA code for the instrument type (“LSH” for high-level switch, “FIT” for flow indicating transmitter, etc.).

14.3.5 Network Communication

- **Variable frequency drives –** The City uses Ethernet for communication between variable frequency drives (VFDs) and PLC. Refer to the City’s standard electrical specification for VFD requirements.

- **Media –** Use fiber optic cable where communication media is required to be routed outside a building or enclosure. Copper media (CAT6 cable, coax) is acceptable within a building or enclosure.

- **Radio –** The City uses radio for communication between remote sites and SCADA Central. Coordinate the approach for radio system design requirements, including radio pathway study, with the City's project manager.

14.3.6 Radio Pathway Study

Where not provided by the City, provide a radio pathway study to select and/or confirm a radio path for communication between the remote station and the central monitoring station or a repeater. The radio pathway study will confirm that radio communications can be successfully achieved with acceptable fade margin using the City's chosen frequency. The results of the pathway study will be used to determine radio system requirements including antenna height and signal routing (need for use of repeaters, etc.).

A radio pathway study is generally required only for remote stations with new radio links, unless the City is experiencing difficulty with existing radio communication or is planning to change radio frequency or signal routing.

14.3.7 Instruments and Components

Question for City: *Let us know if you have specific manufacturer/model preferences so we can list them in these subsections.*

14.3.7.1 Common Instrumentation for All Remote Stations

Use magnetic flowmeters for flow measurement.

14.3.7.2 Wastewater Lift Stations

Provide a submersible pressure transducer for wetwell level monitoring and control. Provide a float switch for high-high level alarming.

14.3.8 Testing Requirements

Refer to Bend standard specification "Equipment Testing, Facility Startup, and Commissioning" for requirements.

ATTACHMENT 1

Sample P&ID

Attachment 1: Sample P&ID

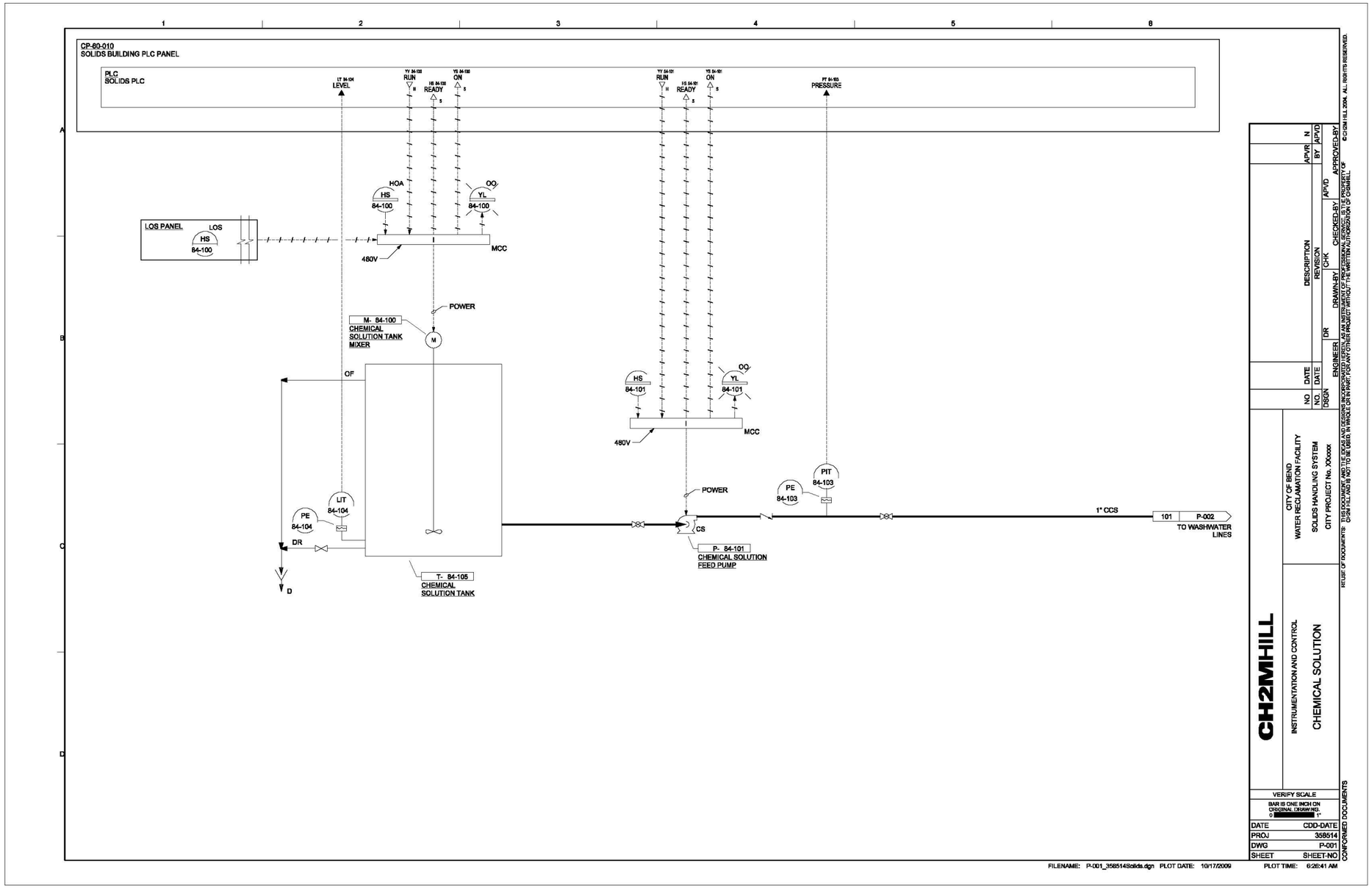

ATTACHMENT 2

Sample Process Control Narrative

CONTROL NARRATIVES

TABLE OF CONTENTS

DIGESTER SLUDGE XFER PUMPS 1, 2, AND 3.....1

Sludge Transfer Pump Suction Pressure.....1

Sludge Transfer Pump Discharge Pressure.....1

Sludge Transfer Pump Flow Valve.....2

Sludge Transfer Pump.....3

Digester Sludge Transfer Pumps 1, 2, and 3

Sludge Transfer Pump Suction Pressure

Loop Numbers

- 63-013 (Transfer Pump No. 1 Suction Pressure)
- 63-023 (Transfer Pump No. 2 Suction Pressure)
- 63-033 (Transfer Pump No. 3 Suction Pressure)

Loop Description

A pressure switch is provided at each pump's suction to detect a LOW pressure condition. The pressure switch provides a contact closure to the PLC for remote monitoring and control.

SCADA Functions

The PLC will monitor the switch position for detection of a low suction pressure condition. The PLC will generate a LOW SUCTION PRESSURE alarm immediately upon detection (no alarm delay timer). The alarm can be disabled by operators via the HMI graphics.

HMI Status Monitoring (typical for each pump):

- Sludge Transfer Pump Suction Pressure LOW (alarm)

HMI Control Interface

- Sludge Transfer Pump Discharge Pressure Alarm ENABLE/DISABLE
- Sludge Transfer Pump Discharge Pressure

Loop Numbers

- 63-011 (Transfer Pump No. 1 Discharge Pressure)
- 63-021 (Transfer Pump No. 2 Discharge Pressure)
- 63-031 (Transfer Pump No. 3 Discharge Pressure)

Loop Description

A pressure measurement is provided at each pump's discharge. The pressure transmitters provide 4-20mA analog input to the PLC for remote monitoring and control.

SCADA Functions

The PLC will calculate HIGH and LOW alarms based on operator entered alarm set points:

- LOW alarm setpoint (initial setpoint) = 10-psi
- HIGH alarm setpoint (initial setpoint) = 60-psi

The associated pump must be running as a condition for both HIGH and LOW alarm calculation. LOW alarm calculation is disabled for the first 5 minutes of pump running to allow the pump to ramp to a sufficient speed to build discharge pressure. Alarm generation will be delayed based on an operator-adjustable alarm delay setpoint to prevent nuisance

alarming (the same alarm delay setpoint is used for both high and low alarms). The alarms can be disabled by operators via the HMI graphics.

HMI Status Monitoring (typical for each pump)

- Sludge Transfer Pump Discharge PRESSURE
- Sludge Transfer Pump Discharge Pressure LOW (alarm)
- Sludge Transfer Pump Discharge Pressure HIGH (alarm)

HMI Control Interface

- Sludge Transfer Pump Discharge Pressure ALARM DELAY SETPOINT (0-180 seconds)
- Sludge Transfer Pump Discharge Pressure Alarm ENABLE/DISABLE
- Sludge Transfer Pump Flow Valve

Loop Numbers

- 63-012 (Transfer Pump No. 1 Flow Valve)
- 63-022 (Transfer Pump No. 2 Flow Valve)
- **63-032 (Transfer Pump No. 3 Flow Valve)**

Loop Description

A motor-operated butterfly valve is provided on each pump's discharge for use as a check valve.

SCADA Functions

PLC control will be enabled when READY status is indicated by the valve actuator (REMOTE is selected at the valve's field mode selector and the valve's "MR" contact is closed).

Monitoring and Control Interface

The HMI control popup will be based on the existing "p_HW AM PDS P1 Iso Vlv" popup from the Headworks system.

Control Mode Selection

Operators will select the SCADA control mode (AUTO/MANUAL) at the HMI graphics.

Manual Control

Operators will manually control the valve's operation using OPEN and CLOSE pushbuttons on the HMI graphics:

- The valve will travel to the fully open position when the OPEN pushbutton is pressed.
- The valve will travel to the fully closed position when the CLOSE pushbutton is pressed.

Auto Control

The PLC will automatically control the valve's operation, as outlined below:

- When a sludge transfer pump is called to start, the PLC will start the pump immediately. Opening of the associated flow (check) valve will be delayed based on an operator-entered delay timer (flow valve OPEN DELAY timer).

- When a sludge transfer pump is called to stop, the PLC will begin closing the associated flow (check) valve immediately. Stopping of the pump will be delayed based on an operator-entered delay timer (pump STOP DELAY timer).

Alarms

The PLC will generate control failure alarms, as outlined below:

- The PLC will generate an OPEN FAILURE alarm if the valve does not reach its FULLY OPEN position within 60 seconds following an OPEN command.
- The PLC will generate a CLOSE FAILURE alarm if the valve does not reach its FULLY CLOSED position within 60 seconds following a CLOSE command.
- Valve READY status is a condition for generation of OPEN FAILURE and CLOSE FAILURE alarms to prevent nuisance tripping when the valve is in LOCAL control mode.
- The alarms can be disabled by operators via the HMI graphics.
- OPEN FAILURE and CLOSE FAILURE alarms are for operator notification only. These alarms are not used for equipment control interlocks.

HMI Status Monitoring (typical for each pump)

- Sludge Transfer Pump Flow Valve READY status
- Sludge Transfer Pump Flow Valve FULLY OPEN status
- Sludge Transfer Pump Flow Valve FULLY CLOSED status
- Sludge Transfer Pump Flow Valve OPEN FAILURE alarm
- Sludge Transfer Pump Flow Valve CLOSE FAILURE alarm

HMI Control Interface

- Sludge Transfer Pump Flow Valve AUTO/MANUAL selector
- Sludge Transfer Pump Flow Valve OPEN pushbutton
- Sludge Transfer Pump Flow Valve CLOSE pushbutton
- Sludge Transfer Pump Flow Valve Alarm ENABLE/DISABLE
- Sludge Transfer Pump Flow Valve OPEN DELAY timer
- Sludge Transfer Pump STOP DELAY timer
- Sludge Transfer Pump

Loop Numbers

- 63-010 (Transfer Pump No. 1)
- 63-020 (Transfer Pump No. 2)
- 63-030 (Transfer Pump No. 3)

Loop Description

Adjustable speed pumps are provided for sludge transfer.

SCADA Functions

PLC control will be enabled when READY status is indicated by the pump's variable frequency drive (REMOTE is selected at the drive).

Monitoring and Control Interface

The HMI control popup will be based on the existing “p_HW AM Drain Sump Pump 1” popup from the Headworks system.

RUN Control Mode Selection:

Operators will select the SCADA RUN control mode (AUTO/MANUAL) at the HMI graphics.

RUN Control – Manual

Operators will manually control the pump’s operation using START and STOP pushbuttons on the HMI graphics:

- The pump will run when the START button is pressed.
- The pump will stop when the STOP button is pressed.
- Automatic interlocks are disabled in manual control mode (suction pressure alarm interlocks, discharge pressure alarm interlocks, check valve position interlocks, etc).

RUN Control – AUTO

The PLC will automatically control the pump’s operation, as outlined below:

- The automatic control functions depend upon the pump’s chosen sludge destination, as outlined below. Operators select the sludge destination for each transfer pump using an existing HMI control graphic. The mode options are NONE, BOILER 1, BOILER 2, or DEWATERING.
  - NONE: The pump will not run.
  - BOILER 1 mode: The pump will run continuously.
  - BOILER 2 mode: The pump will run continuously.
  - DEWATERING mode: The pump will run when called by the solids system. The solids system logic, including the message block for peer-to-peer PLC communication and the software address for the run request for each pump are already configured.
- INTERLOCKS: The following interlocks will impact automatic run operation regardless of the sludge destination selected:
  - When a sludge transfer pump is called to start, the PLC will start the pump immediately. Opening of the associated flow (check) valve will be delayed based on an operator-entered delay timer (flow valve OPEN DELAY timer).
  - When a sludge transfer pump is called to stop, the PLC will begin closing the associated flow (check) valve immediately. Stopping of the pump will be delayed based on an operator-entered delay timer (pump STOP DELAY timer).
  - Any of the following alarms will stop the pump and lock it out from re-starting until operators reset the alarm using the RESET button on the associated pump control popup at the HMI graphics:
    - Suction pressure LOW
    - Discharge pressure LOW
    - Discharge pressure HIGH

- INTERLOCKS: The following interlocks will impact automatic run operation only when BOILER 1 or BOILER 2 sludge destination is selected:
  - Immediately stop the sludge transfer pump when its associated grinder fails to start. The grinder start failure interlock is ignored if the grinder is bypassed (operator selection on grinder control popup in HMI graphics).

SPEED Control Mode Selection

Operators will select the SCADA SPEED control mode (AUTO/MANUAL) at the HMI graphics.

SPEED Control –MANUAL

Operators will manually control the pump's speed using a SPEED SETPOINT (0-100%) on the HMI graphics.

SPEED Control –AUTO

The automatic speed control functions depend upon the pump's chosen sludge destination, as outlined below.

- NONE: The pump will not run.
- BOILER 1 mode: The pump will run at 100% speed.
- BOILER 2 mode: The pump will run at 100% speed.
- DEWATERING mode: The pump will run at the speed requested by the solids system. The solids system logic, including the message block for peer-to-peer PLC communication and the software address for the speed request for each pump are already configured.

Alarms

The PLC will generate control failure alarms, as outlined below:

- The PLC will generate a START FAILURE alarm if the pump does not start within 10 seconds following a RUN command.
- The PLC will generate a STOP FAILURE alarm if the pump does not stop within 10 seconds following a STOP command.
- The alarms can be disabled by operators via the HMI graphics.
- START FAILURE and STOP FAILURE alarms are for operator notification only. These alarms are not used for equipment control interlocks.

Special Functions

The PLC will track each pump's RUNTIME based on its ON status indication to the PLC. The runtime counter will roll over (auto-reset) at 10,000 accumulated hours, but it may also be manually reset via a pushbutton on the HMI graphics.

HMI Status Monitoring (typical for each pump)

- Sludge Transfer Pump READY status
- Sludge Transfer Pump ON status

- Sludge Transfer Pump FAILURE status
- Sludge Transfer Pump START FAILURE status
- Sludge Transfer Pump STOP FAILURE status
- Sludge Transfer Pump SPEED
- Sludge Transfer Pump RUNTIME

HMI Control Interface

- Sludge Transfer Pump Run Control AUTO/MANUAL selector
- Sludge Transfer Pump START pushbutton
- Sludge Transfer Pump STOP pushbutton
- Sludge Transfer Pump Speed Control AUTO/MANUAL selector
- Sludge Transfer Pump SPEED SETPOINT
- Sludge Transfer Pump Alarm ENABLE/DISABLE
- Sludge Transfer Pump Alarm RESET pushbutton
- Sludge Transfer Pump RUNTIME RESET

ATTACHMENT 3

Sample PLC I/O List

BEND DIGESTER MODS

SAMPLE PLC I/O LIST

CVO/358514A

P&ID TAG	SOFTWARE TAG	Tag Type	I/O Module	Description	Zero / LOW Range	One / HIGH Range	Units	Physical Loc'n			Hardwired Address	P&ID
								Rack	Slot	Point		
FIT-64-305	WW64305_FIT_PV	AI	1746-NI8	FLARE GAS FLOWRATE	0	350	CFM	0	1	7	I:1.7	P103
P-63-10	WW6310_P_SPFBK	AI	1746-NI8	DIGESTER SLUDGE TRANSFER PUMP 1 SPEED FEEDBACK	0	100	%	0	3	3	I:3.3	
PIT-63-11	WW6311_PIT_PV	AI	1746-NI8	DIGESTER SLUDGE TRANSFER PUMP 1 DISCHARGE PRESSURE	0	100	PSI	0	3	4	I:3.4	
P-63-20	WW6320_P_SPFBK	AI	1746-NI8	DIGESTER SLUDGE TRANSFER PUMP 2 SPEED FEEDBACK	0	100	%	0	3	5	I:3.5	
PIT-63-21	WW6321_PIT_PV	AI	1746-NI8	DIGESTER SLUDGE TRANSFER PUMP 2 DISCHARGE PRESSURE	0	100	PSI	0	3	6	I:3.6	
P-63-30	WW6330_P_SPFBK	AI	1746-NI8	DIGESTER SLUDGE TRANSFER PUMP 3 SPEED FEEDBACK	0	100	%	0	3	7	I:3.7	
PIT-63-31	WW6331_PIT_PV	AI	1746-NI8	DIGESTER SLUDGE TRANSFER PUMP 3 DISCHARGE PRESSURE	0	100	PSI	0	4	0	I:4.0	
P-63-330	WW63330_P_SPFBK	AI	1746-NI8	DIGESTER MIX PUMP NO. 3	0	100	%	0	5	0	I:5.0	P103
TIT-63-111	WW63111_TIT_PV	AI	1746-NI8	DIGESTER NO. 1 SLUDGE TEMPERATURE	50	120	DEG F	0	5	1	I:5.1	P103
LIT-63-103A	WW63103A_LIT_PV	AI	1746-NI8	DIGESTER NO. 1 LEVEL (DIRECT SENSING)	2	30	FEET	0	5	2	I:5.2	P103
LIT-63-103B	WW63103B_LIT_PV	AI	1746-NI8	DIGESTER NO. 1 LEVEL (RADAR)	0	30	FEET	0	5	3	I:5.3	P103
FIT-63-334	WW63334_FIT_PV	AI	1746-NI8	DIGESTER MIX PUMP NO. 3 FLOW	0	6000	GPM	0	5	4	I:5.4	P103
TIT-63-411	WW63411_TIT_PV	AI	1746-NI8	BOILER NO. 1 SLUDGE OUTLET TEMPERATURE	50	120	DEG F	0	5	5	I:5.5	P106
FIT-64-306	WW64306_FIT_PV	AI	1746-NI8	DIGESTER NO. 3 GAS FLOWRATE	0	200	CFM	0	5	6	I:5.6	P106
PIT-64-105	WW64105_PIT_PV	AI	1746-NI8	DIGESTER NO. 1 GAS PRESSURE	0	20	IN H2O	0	5	7	I:5.7	P107
P-63-10	WW6310_P_SPCTL	AO	1746-NO4I	DIGESTER SLUDGE TRANSFER PUMP 1 SPEED CONTROL	0	100	%	0	7	2	O:7.2	
P-63-20	WW6320_P_SPCTL	AO	1746-NO4I	DIGESTER SLUDGE TRANSFER PUMP 2 SPEED CONTROL	0	100	%	0	7	3	O:7.3	
P-63-30	WW6330_P_SPCTL	AO	1746-NO4I	DIGESTER SLUDGE TRANSFER PUMP 3 SPEED CONTROL	0	100	%	0	8	0	O:8.0	
P-63-330	WW63330_P_SPCTL	AO	1746-NO4I	DIGESTER MIX PUMP NO. 3	0	100	%	0	8	1	O:8.1	P103
P-63-340	WW63340_P_SPCTL	AO	1746-NO4I	DIGESTER MIX PUMP NO. 4	0	100	%	0	8	2	O:8.2	P104
P-63-340	WW63340_P_SPFBK	AI	1746-NI8	DIGESTER MIX PUMP NO. 4	0	100	%	0	9	0	I:9.0	P104
TIT-63-210	WW63210_TIT_PV	AI	1746-NI8	DIGESTER NO. 2 SLUDGE TEMPERATURE	50	120	DEG F	0	9	1	I:9.1	P104
LIT-63-203A	WW63203A_LIT_PV	AI	1746-NI8	DIGESTER NO. 2 LEVEL (DIRECT SENSING)	7	30	FEET	0	9	2	I:9.2	P104
LIT-63-203B	WW63203B_LIT_PV	AI	1746-NI8	DIGESTER NO. 2 LEVEL (RADAR)	0	30	FEET	0	9	3	I:9.3	P104
FIT-63-344	WW63344_FIT_PV	AI	1746-NI8	DIGESTER MIX PUMP NO. 4 FLOW	0	6000	GPM	0	9	4	I:9.4	P104
TIT-63-421	WW63421_TIT_PV	AI	1746-NI8	BOILER NO. 2 SLUDGE OUTLET TEMPERATURE	50	120	DEG F	0	9	5	I:9.5	P106
FIT-64-104	WW64104_FIT_PV	AI	1746-NI8	DIGESTER NOS. 1 AND 2 GAS FLOWRATE	0	200	CFM	0	9	6	I:9.6	P106
PIT-64-205	WW64205_PIT_PV	AI	1746-NI8	DIGESTER NO. 2 GAS PRESSURE	0	20	IN H2O	0	9	7	I:9.7	P107
P-63-330	WW63330_P_REM	DI-24	1746-IB16	DIGESTER MIX PUMP NO. 3	LOCAL	REMOTE		0	10	0	I:10/0	P103
P-63-330	WW63330_P_ESTOP	DI-24	1746-IB16	DIGESTER MIX PUMP NO. 3	OK	ESTOP		0	10	1	I:10/1	P103
PISH-63-331	WW63331_PISH_HIGH	DI-24	1746-IB16	DIGESTER MIX PUMP NO. 3 DISCHARGE PRESSURE	HIGH	NT HIGH		0	10	2	I:10/2	P103
ZSC-63-332	WW63332_ZSC_CLSD	DI-24	1746-IB16	DIGESTER MIX PUMP NO. 3 FLOW VALVE	NT CLOSED	CLOSED		0	10	3	I:10/3	P103
ZSO-63-332	WW63332_ZSO_OPND	DI-24	1746-IB16	DIGESTER MIX PUMP NO. 3 FLOW VALVE	NT OPENED	OPENED		0	10	4	I:10/4	P103
FV-63-332	WW63332_FV_REM	DI-24	1746-IB16	DIGESTER MIX PUMP NO. 3 FLOW VALVE	LOCAL	REMOTE		0	10	5	I:10/5	P103
ZSC-66-102	WW66102_ZSC_CLSD	DI-24	1746-IB16	DIGESTER MIX PUMP NO. 3 PS/TS FEED FLOW VALVE	NT CLOSED	CLOSED		0	10	6	I:10/6	P103
ZSO-66-102	WW66102_ZSO_OPND	DI-24	1746-IB16	DIGESTER MIX PUMP NO. 3 PS/TS FEED FLOW VALVE	NT OPENED	OPENED		0	10	7	I:10/7	P103
FV-66-102	WW66102_FV_REM	DI-24	1746-IB16	DIGESTER MIX PUMP NO. 3 PS/TS FEED FLOW VALVE	LOCAL	REMOTE		0	10	8	I:10/8	P103
PISL-63-333	WW63333_PISL_LOW	DI-24	1746-IB16	DIGESTER MIX PUMP NO. 3 SUCTION PRESSURE	LOW	NT LOW		0	10	9	I:10/9	P103
LSH-63-104	WW63104_LSH_HIGH	DI-24	1746-IB16	DIGESTER NO. 1 EMERGENCY OVERFLOW BOX LEVEL	HIGH	NT HIGH		0	10	10	I:10/10	P103
E-63-410	WW63410_E_FAIL	DI-24	1746-IB16	GRINDER NO. 1	OK	FAIL		0	10	11	I:10/11	P106
E-63-410	WW63410_E_FWD	DI-24	1746-IB16	GRINDER NO. 1	N/A	FORWARD		0	10	12	I:10/12	P106
E-63-410	WW63410_E_REM	DI-24	1746-IB16	GRINDER NO. 1	LOCAL	REMOTE		0	10	13	I:10/13	P106
E-63-410	WW63410_E_REV	DI-24	1746-IB16	GRINDER NO. 1	N/A	REVERSE		0	10	14	I:10/14	P106
EMP-64-900	WW64900_EMP_ALARM	DI-24	1746-IB16	DIGESTER AREA ENVIRONMENTAL MONITORING	OK	ALARM		0	10	15	I:10/15	P107
P-63-330	WW63330_P_ON	DI-24	1746-IB16	DIGESTER MIX PUMP NO. 3	OFF	ON		0	11	0	I:11/0	P103
P-63-340	WW63340_P_ESTOP	DI-24	1746-IB16	DIGESTER MIX PUMP NO. 4	OK	ESTOP		0	11	1	I:11/1	P104
PISH-63-341	WW63341_PISH_HIGH	DI-24	1746-IB16	DIGESTER MIX PUMP NO. 4 DISCHARGE PRESSURE	HIGH	NT HIGH		0	11	2	I:11/2	P104

©COPYRIGHT 2007 CH2M HILL

SAMPLE PLC I/O LIST

P&ID TAG	SOFTWARE TAG	Tag Type	I/O Module	Description	Zero / LOW Range	One / HIGH Range	Units	Physical Loc'n			Hardwired	P&ID
								Rack	Slot	Point	Address	
ZSC-63-342	WW63342_ZSC_CLSD	DI-24	1746-IB16	DIGESTER MIX PUMP NO. 4 FLOW VALVE	NT CLOSED	CLOSED		0	11	3	I:11/3	P104
ZSO-63-342	WW63342_ZSO_OPND	DI-24	1746-IB16	DIGESTER MIX PUMP NO. 4 FLOW VALVE	NT OPENED	OPENED		0	11	4	I:11/4	P104
FV-63-342	WW63342_FV_REM	DI-24	1746-IB16	DIGESTER MIX PUMP NO. 4 FLOW VALVE	LOCAL	REMOTE		0	11	5	I:11/5	P104
PISL-63-343	WW63343_PISL_LOW	DI-24	1746-IB16	DIGESTER MIX PUMP NO. 4 SUCTION PRESSURE	LOW	NT LOW		0	11	6	I:11/6	P104
LSH-63-211	WW63211_LSH_HIGH	DI-24	1746-IB16	DIGESTER NO. 2 EMERGENCY OVERFLOW BOX LEVEL	HIGH	NT HIGH		0	11	7	I:11/7	P104
E-63-420	WW63420_E_FAIL	DI-24	1746-IB16	GRINDER NO. 2	OK	FAIL		0	11	8	I:11/8	P106
E-63-420	WW63420_E_FWD	DI-24	1746-IB16	GRINDER NO. 2	N/A	FORWARD		0	11	9	I:11/9	P106
E-63-420	WW63420_E_REM	DI-24	1746-IB16	GRINDER NO. 2	LOCAL	REMOTE		0	11	10	I:11/10	P106
E-63-420	WW63420_E_REV	DI-24	1746-IB16	GRINDER NO. 2	N/A	REVERSE		0	11	11	I:11/11	P106
P-63-330	WW63330_P_FAIL	DI-24	1746-IB16	DIGESTER MIX PUMP NO. 3	OK	FAIL		0	11	12	I:11/12	P103
P-63-340	WW63340_P_REM	DI-24	1746-IB16	DIGESTER MIX PUMP NO. 4	LOCAL	REMOTE		0	11	13	I:11/13	P104
P-63-340	WW63340_P_ON	DI-24	1746-IB16	DIGESTER MIX PUMP NO. 4	OFF	ON		0	11	14	I:11/14	P104
P-63-340	WW63340_P_FAIL	DI-24	1746-IB16	DIGESTER MIX PUMP NO. 4	OK	FAIL		0	11	15	I:11/15	P104
FV-63-063	WW63063_FV_REM	DI-24	1746-IB16	DIGESTER RECIRC & TFR PUMP SUCTION SELECTOR VALVE 2	LOCAL	REMOTE		0	12	0	I:12/0	P105
E-63-430	WW63430_E_FAIL	DI-24	1746-IB16	GRINDER NO. 3	OK	FAIL		0	12	1	I:12/1	P102
E-63-430	WW63430_E_FWD	DI-24	1746-IB16	GRINDER NO. 3	N/A	FORWARD		0	12	2	I:12/2	P102
E-63-430	WW63430_E_REM	DI-24	1746-IB16	GRINDER NO. 3	LOCAL	REMOTE		0	12	3	I:12/3	P102
E-63-430	WW63430_E_REV	DI-24	1746-IB16	GRINDER NO. 3	N/A	REVERSE		0	12	4	I:12/4	P102
ZSC-63-112	WW63112_ZSC_CLSD	DI-24	1746-IB16	DIGESTER NO. 1 GRIT REMOVAL FLOW VALVE	NT CLOSED	CLOSED		0	12	5	I:12/5	P103
ZSO-63-112	WW63112_ZSO_OPND	DI-24	1746-IB16	DIGESTER NO. 1 GRIT REMOVAL FLOW VALVE	NT OPENED	OPENED		0	12	6	I:12/6	P103
FV-63-112	WW63112_FV_REM	DI-24	1746-IB16	DIGESTER NO. 1 GRIT REMOVAL FLOW VALVE	LOCAL	REMOTE		0	12	7	I:12/7	P103
ZSC-63-113	WW63113_ZSC_CLSD	DI-24	1746-IB16	DIGESTER NO. 1 SCUM REMOVAL FLOW VALVE	NT CLOSED	CLOSED		0	12	8	I:12/8	P103
ZSO-63-113	WW63113_ZSO_OPND	DI-24	1746-IB16	DIGESTER NO. 1 SCUM REMOVAL FLOW VALVE	NT OPENED	OPENED		0	12	9	I:12/9	P103
FV-63-113	WW63113_FV_REM	DI-24	1746-IB16	DIGESTER NO. 1 SCUM REMOVAL FLOW VALVE	LOCAL	REMOTE		0	12	10	I:12/10	P103
ZSC-63-062	WW63062_ZSC_CLSD	DI-24	1746-IB16	DIGESTER RECIRC & TFR PUMP SUCTION SELECTOR VALVE 1	NT CLOSED	CLOSED		0	12	11	I:12/11	P105
ZSO-63-062	WW63062_ZSO_OPND	DI-24	1746-IB16	DIGESTER RECIRC & TFR PUMP SUCTION SELECTOR VALVE 1	NT OPENED	OPENED		0	12	12	I:12/12	P105
FV-63-062	WW63062_FV_REM	DI-24	1746-IB16	DIGESTER RECIRC & TFR PUMP SUCTION SELECTOR VALVE 1	LOCAL	REMOTE		0	12	13	I:12/13	P105
ZSC-63-063	WW63063_ZSC_CLSD	DI-24	1746-IB16	DIGESTER RECIRC & TFR PUMP SUCTION SELECTOR VALVE 2	NT CLOSED	CLOSED		0	12	14	I:12/14	P105
ZSO-63-063	WW63063_ZSO_OPND	DI-24	1746-IB16	DIGESTER RECIRC & TFR PUMP SUCTION SELECTOR VALVE 2	NT OPENED	OPENED		0	12	15	I:12/15	P105
FV-63-12	WW6312_FV_READY	DI-24	1746-IB16	DIGESTER SLUDGE TRANSFER PUMP 1 DISCHARGE ISOLATION VALVE	NT READY	READY		1	0	7	I:13/7	
FV-63-12	WW6312_FV_CLOSED	DI-24	1746-IB16	DIGESTER SLUDGE TRANSFER PUMP 1 DISCHARGE ISOLATION VALVE	CLOSED	NT CLOSED		1	0	8	I:13/8	
FV-63-12	WW6312_FV_OPENED	DI-24	1746-IB16	DIGESTER SLUDGE TRANSFER PUMP 1 DISCHARGE ISOLATION VALVE	OPENED	NT OPENED		1	0	9	I:13/9	
FV-63-12	WW6312_FV_READY	DI-24	1746-IB16	DIGESTER SLUDGE TRANSFER PUMP 2 DISCHARGE ISOLATION VALVE	NT READY	READY		1	0	13	I:13/13	
FV-63-12	WW6312_FV_CLOSED	DI-24	1746-IB16	DIGESTER SLUDGE TRANSFER PUMP 2 DISCHARGE ISOLATION VALVE	CLOSED	NT CLOSED		1	0	14	I:13/14	
FV-63-12	WW6312_FV_OPENED	DI-24	1746-IB16	DIGESTER SLUDGE TRANSFER PUMP 2 DISCHARGE ISOLATION VALVE	OPENED	NT OPENED		1	0	15	I:13/15	
FV-63-12	WW6312_FV_CLOSE	DO-24	1746-OX8	DIGESTER SLUDGE TRANSFER PUMP 1 DISCHARGE ISOLATION VALVE	CLOSE	OPEN		1	6	2	O:19/2	
FV-63-12	WW6312_FV_CLOSE	DO-24	1746-OX8	DIGESTER SLUDGE TRANSFER PUMP 2 DISCHARGE ISOLATION VALVE	CLOSE	OPEN		1	6	4	O:19/4	
P-63-10	WW6310_P_RUN	DO-24	1746-OX8	DIGESTER SLUDGE TRANSFER PUMP 1	STOP	RUN		1	8	6	O:21/6	
P-63-20	WW6320_P_RUN	DO-24	1746-OX8	DIGESTER SLUDGE TRANSFER PUMP 2	STOP	RUN		1	8	7	O:21/7	
P-63-30	WW6330_P_RUN	DO-24	1746-OX8	DIGESTER SLUDGE TRANSFER PUMP 3	STOP	RUN		1	8	8	O:21/8	
FV-63-12	WW6312_FV_CLOSE	DO-24	1746-OX8	DIGESTER SLUDGE TRANSFER PUMP 3 DISCHARGE ISOLATION VALVE	CLOSE	OPEN		1	8	9	O:21/9	
P-63-10	WW6310_P_READY	DI-24	1746-IB16	DIGESTER SLUDGE TRANSFER PUMP 1	NT READY	READY		1	9	0	I:22/0	
P-63-10	WW6310_P_ON	DI-24	1746-IB16	DIGESTER SLUDGE TRANSFER PUMP 1	OFF	ON		1	9	1	I:22/1	
P-63-10	WW6310_P_FAULT	DI-24	1746-IB16	DIGESTER SLUDGE TRANSFER PUMP 1	FAIL	OK		1	9	2	I:22/2	
PSL-63-13	WW6313_PSL_LOW	DI-24	1746-IB16	DIGESTER SLUDGE TRANSFER PUMP 1 SUCTION PRESSURE	LOW	NT LOW		1	9	3	I:22/3	
P-63-20	WW6320_P_READY	DI-24	1746-IB16	DIGESTER SLUDGE TRANSFER PUMP 2	NT READY	READY		1	9	4	I:22/4	
P-63-20	WW6320_P_ON	DI-24	1746-IB16	DIGESTER SLUDGE TRANSFER PUMP 2	OFF	ON		1	9	5	I:22/5	

©COPYRIGHT 2007 CH2M HILL

SAMPLE PLC I/O LIST

P&ID TAG	SOFTWARE TAG	Tag Type	I/O Module	Description	Zero / LOW Range	One / HIGH Range	Units	Physical Loc'n			Hardwired	P&ID
								Rack	Slot	Point	Address	
P-63-20	WW6320_P_FAULT	DI-24	1746-IB16	DIGESTER SLUDGE TRANSFER PUMP 2	FAIL	OK		1	9	6	I:22/6	
PSL-63-23	WW6323_PSL_LOW	DI-24	1746-IB16	DIGESTER SLUDGE TRANSFER PUMP 2 SUCTION PRESSURE	LOW	NT LOW		1	9	7	I:22/7	
P-63-30	WW6330_P_READY	DI-24	1746-IB16	DIGESTER SLUDGE TRANSFER PUMP 3	NT READY	READY		1	9	8	I:22/8	
P-63-30	WW6330_P_ON	DI-24	1746-IB16	DIGESTER SLUDGE TRANSFER PUMP 3	OFF	ON		1	9	9	I:22/9	
P-63-30	WW6330_P_FAULT	DI-24	1746-IB16	DIGESTER SLUDGE TRANSFER PUMP 3	FAIL	OK		1	9	10	I:22/10	
PSL-63-33	WW6333_PSL_LOW	DI-24	1746-IB16	DIGESTER SLUDGE TRANSFER PUMP 3 SUCTION PRESSURE	LOW	NT LOW		1	9	11	I:22/11	
FV-63-12	WW6312_FV_READY	DI-24	1746-IB16	DIGESTER SLUDGE TRANSFER PUMP 3 DISCHARGE ISOLATION VALVE	NT READY	READY		1	9	12	I:22/12	
FV-63-12	WW6312_FV_CLOSED	DI-24	1746-IB16	DIGESTER SLUDGE TRANSFER PUMP 3 DISCHARGE ISOLATION VALVE	CLOSED	NT CLOSED		1	9	13	I:22/13	
FV-63-12	WW6312_FV_OPENED	DI-24	1746-IB16	DIGESTER SLUDGE TRANSFER PUMP 3 DISCHARGE ISOLATION VALVE	OPENED	NT OPENED		1	9	14	I:22/14	
E-63-430	WW63430_E_RUN	DO-24	1746-OX8	GRINDER NO. 3	STOP	RUN		1	11	0	O:24/0	P102
FV-63-332	WW63332_FV_CLOSE	DO-24	1746-OX8	DIGESTER MIX PUMP NO. 3 FLOW VALVE	N/A	CLOSE		1	11	1	O:24/1	P103
FV-63-332	WW63332_FV_OPEN	DO-24	1746-OX8	DIGESTER MIX PUMP NO. 3 FLOW VALVE	N/A	OPEN		1	11	2	O:24/2	P103
FV-63-112	WW63112_FV_CLOSE	DO-24	1746-OX8	DIGESTER NO. 1 GRIT REMOVAL FLOW VALVE	N/A	CLOSE		1	11	3	O:24/3	P103
FV-63-112	WW63112_FV_OPEN	DO-24	1746-OX8	DIGESTER NO. 1 GRIT REMOVAL FLOW VALVE	N/A	OPEN		1	11	4	O:24/4	P103
FV-63-113	WW63113_FV_CLOSE	DO-24	1746-OX8	DIGESTER NO. 1 SCUM REMOVAL FLOW VALVE	N/A	CLOSE		1	11	5	O:24/5	P103
FV-63-113	WW63113_FV_OPEN	DO-24	1746-OX8	DIGESTER NO. 1 SCUM REMOVAL FLOW VALVE	N/A	OPEN		1	11	6	O:24/6	P103
E-63-410	WW63410_E_RUN	DO-24	1746-OX8	GRINDER NO. 1	STOP	RUN		1	11	7	O:24/7	P106
FV-63-342	WW63342_FV_CLOSE	DO-24	1746-OX8	DIGESTER MIX PUMP NO. 4 FLOW VALVE	N/A	CLOSE		1	12	0	O:25/0	P104
FV-63-342	WW63342_FV_OPEN	DO-24	1746-OX8	DIGESTER MIX PUMP NO. 4 FLOW VALVE	N/A	OPEN		1	12	1	O:25/1	P104
FV-63-062	WW63062_FV_CLOSE	DO-24	1746-OX8	DIGESTER RECIRC & TFR PUMP SUCTION SELECTOR VALVE 1	N/A	CLOSE		1	12	2	O:25/2	P105
FV-63-062	WW63062_FV_OPEN	DO-24	1746-OX8	DIGESTER RECIRC & TFR PUMP SUCTION SELECTOR VALVE 1	N/A	OPEN		1	12	3	O:25/3	P105
FV-63-063	WW63063_FV_CLOSE	DO-24	1746-OX8	DIGESTER RECIRC & TFR PUMP SUCTION SELECTOR VALVE 2	N/A	CLOSE		1	12	4	O:25/4	P105
FV-63-063	WW63063_FV_OPEN	DO-24	1746-OX8	DIGESTER RECIRC & TFR PUMP SUCTION SELECTOR VALVE 2	N/A	OPEN		1	12	5	O:25/5	P105
E-63-420	WW63420_E_RUN	DO-24	1746-OX8	GRINDER NO. 2	STOP	RUN		1	12	6	O:25/6	P106
FV-66-102	WW66102_FV_OPEN	DO-24	1746-OX8	DIGESTER MIX PUMP NO. 3 PS/TS FEED FLOW VALVE	N/A	OPEN		1	12	7	O:25/7	P103
P-63-330	WW63330_P_RUN	DO-24	1746-OX8	DIGESTER MIX PUMP NO. 3	STOP	RUN		2	4	4	O:30/4	P103
P-63-340	WW63340_P_RUN	DO-24	1746-OX8	DIGESTER MIX PUMP NO. 4	STOP	RUN		2	4	5	O:30/5	P104
FV-66-102	WW66102_FV_CLOSE	DO-24	1746-OX8	DIGESTER MIX PUMP NO. 3 PS/TS FEED FLOW VALVE	N/A	CLOSE		2	4	6	O:30/6	P103

©COPYRIGHT 2007 CH2M HILL

ATTACHMENT 4

Sample Loop Drawing

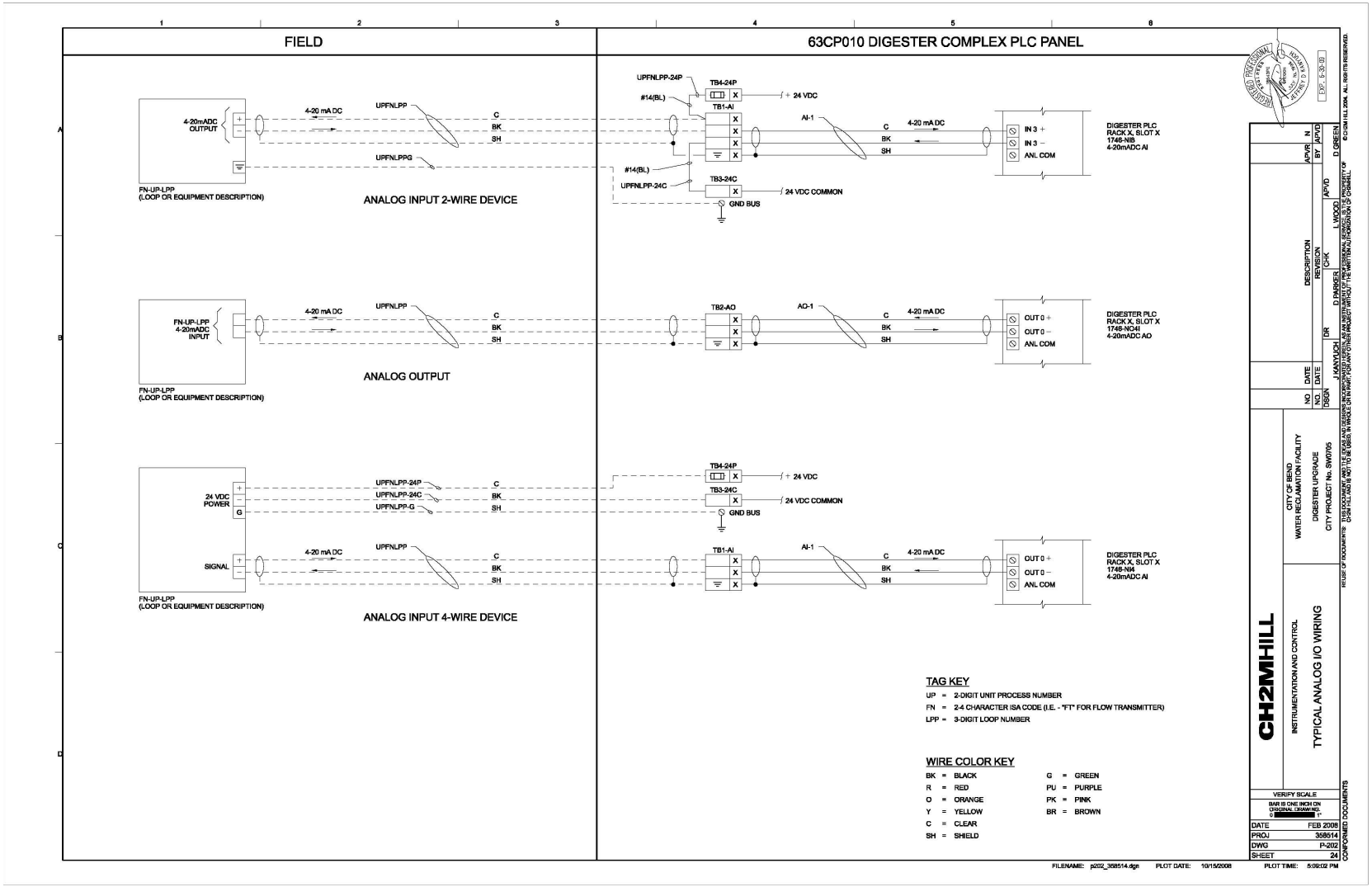

Attachment 4: Sample Loop Drawing

PART III

City of Bend Special Provisions to the Oregon Standard Specifications

City of Bend Special Provisions to
the Oregon Standard Specifications

Table of Contents

PART 00200 – TEMPORARY FEATURES AND APPURTENANCES

Section 00220 – Accommodation for Public Traffic
00220.02 Public Safety and Mobility
00220.03 Work Zone Notifications
00220.40 General Requirements

Section 00225 – Work Zone Traffic Control
00225.02 General Requirements
00225.05 Contractor Traffic Control Plan
00225.11 Temporary Signing
00225.13 Temporary Traffic Delineation
00225.41(b-5) Square Tube Sign Supports
00225.43 Temporary Traffic Delineation
00225.62 Temporary Concrete Barrier, Guardrail, and Attenuators
00225.82 Temporary Barricades, Guardrail, Barrier, and Attenuators
00225.87(a) Flaggers
00225.90 Payment
00225.92 Temporary Barricades, Guardrail, Barrier, and Attenuators
00225.97 Flaggers and Flagger Station Lighting

Section 00280 – Erosion and Sediment Control
00280.01 National Pollutant Discharge Elimination System
00280.02 Erosion and Sediment Control Plan on Agency Controlled Lands
00280.03 Non-Agency Controlled Lands ESCP
00280.14 Erosion Prevention Materials
00280.15 Runoff Control Materials
00280.16 Sediment Control Materials
00280.30 Erosion and Sediment Control Manager
00280.40 Installation
00280.41 Work Restrictions
00280.42 Stabilization

Section 00290 – Environmental Protection
00290.20 Waste, Hazardous Waste, and Hazardous Substances
00290.30 Pollution Control

City of Bend Special Provisions to
the Oregon Standard Specifications

Table of Contents

PART 00300 – ROADWORD

Section 00310 – Removal of Structures and Obstructions
00310.41(a) General
00310.80 Measurement
00310.92 Separate Item Basis

Section 00320 – Clearing and Grubbing
00320.02(a) Definitions
00320.40(b-1) Within the Work Areas
00320.40(b-4) Preservation Zone
~~00320.42 Ownership and Disposal of Matter~~
00320.42 Disposal of Matter
00320.90 Payment

Section 00330 – Earthwork
00330.20 Tamping Foot Rollers
00330.40(b) Preservation of Existing Surfacings
00330.41(a-5) Waste Materials
00330.70 General
00330.82 Embankment Basis Measurement
00330.91(d) General Excavation
00330.92 Kinds of Incidental Earthwork

Section 00220 – Watering
00340.10 Water

Section 00350 – Geosynthetic Installation
00350.10 Materials

Section 00360 – Drainage Blankets
00390.11(b) Test Requirements

PART 00400 – DRAINAGE AND SEWERS

Section 00405 – Trench Excavation, Bedding, and Backfill
00405.02 Definitions
00405.14 Trench Backfill
00405.42 Rock Excavation
00405.46 Backfilling
00405.80 Measurement
00405.90 Payment

City of Bend Special Provisions to
the Oregon Standard Specifications

Table of Contents

Section 00445 – Sanitary, Storm, Culvert, Siphon, and Irrigation Pipe
00445.10 General
00445.11 Materials
00445.43
00445.70 00445.70 General: Finishing, Clean Up, and Testing
00445.72
00445.74 Video Inspection of Sanitary and Storm Sewers
00445.80 Measurement
00445.91 Payment

Section 00470 – Manholes, Catch Basins, and Inlets
00470.02 HDPE Construction
00470.10 Materials
00470.45 Steps and Ladders
00470.48 Drywell Facility Construction
00470.72 Drywell Facility Testing
00470.90 Payment

Section 00480 – Drainage Curbs
00480.00, Scope
00480.10, Materials

Section 00490 – Work on Existing Sewers and Structures
00490.43

Section 00495 – Trench Resurfacing
00495.40, General

Section 00640 – Aggregate Base and Shoulders
00640.41 Hauling and Placing

Section 00641 – Aggregate Subbase, Base, and Shoulders
00641.10 Materials
00641.12 Limits of Mixture
00641.41 Mixing, Hauling, and Placing

PART 00700 – WEARING SURFACES

Section 00705 – Emulsified Asphalt Prime Coat and Emulsified Asphalt Fog Coat
00705.11(c) Fog Coat
00705.44 Quality Control

City of Bend Special Provisions to
the Oregon Standard Specifications

Table of Contents

Section 00706 – Emulsified Asphalt Slurry Seal Surfacing
00706.23 Rollers
00706.48 Rolling

Section 00715 – Multiple Application Emulsified Asphalt Surface Treatment
00715.40 Season and Weather Limitations

Section 00730 – Emulsified Asphalt
00730.90 Payment

Section 00744 – Minor Hot Mixed Asphalt Concrete (MHMAC) Pavement
00744.11(a) Asphalt Cement
00744.16 MHMAC Acceptance
00744.17 Small Quantity Acceptance
00744.49 Compaction
00744.80 Measurement
00744.90 Payment
00744.95 MHMAC Price Adjustments

Section 00745 – Hot Mixed Asphalt Concrete (HMAC)
00745.14 Tolerances and Limits
00745.16(a-1) Personnel Requirements
00745.16(a-4) Testing Frequency
00745.16(a-5) Plant Calibration
00745.16(b-1) MDV Quality Control
00745.16(b-3) MDV for Open Graded HMAC
00745.24(a) Steel-Wheeled Rollers
00745.40 Season and Temperature Limitations
00745.61(a-2) Wearing Course
00745.80 Measurement

Section 00746 – Crack Sealing Flexible Pavements
00746.10 Sealants

Section 00759 – Miscellaneous Portland Cement Concrete Structures
00759.10 Materials
00759.12 Sidewalk Ramp Treatment
00759.48(b) Driveways, Walks, Monolithic Curbs, Sidewalks, and Surfacings
00759.49(a) Locations
00759.50(a) General
00759.50(d) Service Stamps
00759.50.50(e) Property Line Monumentation
00759.52 Weather Limitations
00759.52 Metal Handrail

City of Bend Special Provisions to
the Oregon Standard Specifications

Table of Contents

Section 00759 – Miscellaneous Portland Cement Concrete Structures (Cont…)

00759.53 Welding
00759.54 Bolt Holes
00759.80 Measurement
00759.90 Payment

Section 00800 – PERMANENT TRAFFIC SAFETY AND GUIDANCE DEVICES

Section 00810 – Metal Guardrail

00840 Timing and Coordination of Work
00890 Payment

Section 00812 – Adjusting Guardrail

00812.00 Scope
00812.10 Materials
00812.40 Construction
00812.41 Adjusting Guardrail
00812.41(a) Posts Remain in Place
00812.41(b) Raise Posts
00812.43 Repairing Guardrail
00812.80 Measurement
00812.90 Payment

Section 00815 Bollards

00815.10 Materials

00820 Concrete Barrier

00820.12 Re-Use of Concrete Barriers
00820.12(a) New Barrier Used for Temporary Applications
00820.12(b) Barrier Used on Previous Projects

00830 Impact Attenuators

00830.40 General

00840 Delineators and Milepost Marker Posts

00840.10 Materials

00850 Common Provisions for Pavement Markings

00850.20(b) Equipment for Longitudinal Lines
00850.20 Equipment
00850.46 Placement Tolerance
00850.47(b) Curing Of Material
00850.47(c) Retroreflectivity
00850.70 Disposal of Waste

City of Bend Special Provisions to
the Oregon Standard Specifications

Table of Contents

Section 00851 – Pavement Marking Removal
00851.40 General

Section 00857 – Rumble Strips
00857.40 General
00857.80 Measurement

00860 Longitudinal Pavement Markings - Paint
00860.40 General

00867 Transverse Pavement Markings - Legends and Bars
00867.90 Payment

Section 00900 – PERMANENT TRAFFIC CONTROL AND ILLUMINATION SYSTEMS

Section 00905 – Removal and Reinstallation of Existing Signs
00905.40 General

Section 00910 – Wood Sign Posts
00910.40 Post Holes

Section 00920 – Sign Support Footings
00920.80 Measurement

Section 00930 – Metal Sign Supports
00930.01 Definitions and Terms
00930.02 Working Drawings
00930.10 Materials
00930.80 Measurement
00930.90 Payment

Section 00940 – Signs
00940.00 Scope
00940.03 Drawings
00940.46 Inspection
00940.80 General
00940.90 General

Section 00950 – Removal of Electrical Systems
00950.02 Definitions
00950.42 Salvaging and Stockpiling Materials
00950.90 Payment

City of Bend Special Provisions to
the Oregon Standard Specifications

Table of Contents

Section 00960 – Common Provisions for Electrical Systems

00960.41(f) Disposition of Waste Materials
00960.41(f) Disposal of Materials
00960.47 Wood Poles

Section 00962 – Metal Illumination and Traffic Signal Supports

00962.10 Materials
00962.05(c) Illumination Supports
00962.41(b) Disposition of Waste Materials
00962.41(b) Disposal of Materials

Section 00963 – Signal Support Drilled Shafts

00963.10 Materials

Section 00970 – Highway Illumination

00970.00 Scope
00970.50 Grounding and Bonding
00970.80 Measurement

Section 00990 – Traffic Signals

00990.00 Scope
00990.42 Indication Equipment
00990.43(a) Pedestrian Push Buttons
00990.43(c) Video Detection System:
00990.70(b) Control Equipment Testing
00990.70(e) Control Equipment Acceptance
00990.70(f) Control Equipment Installation
00990.70(g) Field Testing
00990.70(h) Traffic Signal Turn–On
00990.70(g) Payment

PART 01100 – Water Supply System

Section 01120 – Irrigation Systems

01120.01a Contractor Requirements
01120.02 References
01120.10 General
01120.11 Pipe, Tubing, and Fittings
01120.12 Automatic Controllers
01120.17 Valves
01120.18 Valve Boxes and Valve Chambers
01120.22 Sprinklers
01120.23 Double Check Backflow Prevention Assemblies

City of Bend Special Provisions to
the Oregon Standard Specifications

Table of Contents

01120.40(a) Plumbing
01120.43 Piping
01120.44 Pipe Jointing
01120.45 Installation
01120.46 Low Voltage Electrical Installation
01120.49 Backfill

Section 01140 – Potable Water Pipe and Fittings
01140.00 Scope
01140.10 Materials
01140.11 Handing Pipe and Fittings
01140.40 Trench Work
01140.41 Laying Pipe
01140.44 Thrust Restraint
01140.49 Backfilling
01140.50 Filling and Flushing
01140.51 Hydrostatic Testing
01140.52 Disinfecting
01140.53 Filling, Flushing, and Hydrostatic Testing
01140.80 Measurement
01140.90 Payment

Section 01150 – Potable Water Valves
01150.10 Materials
01150.40 General
01150.80 General
01150.90 Payment

Section 01160 – Hydrants and Appurtenances
01160.10 Materials
01160.40 Setting Hydrants
01160.80 Measurement

Section 01170 – Potable Water Service Connections
01170.10 Materials
01170.40 General
01170.43 Fire Services
01170.44 Backflow Requirements
01170.80 Measurement
01170.90 Payment

City of Bend Special Provisions to
the Oregon Standard Specifications

Table of Contents

Section 02110 – Posts, Blocks, and Braces
02110.40(a) Grading

Section 02450 – Manhole and Inlet Materials
02450.30 Metal Frames, Covers, Grates, and Ladders

Section 02630 – Base Aggregate
02630.10(a) Grading

Section 02830 – Handrail
02830.10 Shapes, Plates, and Bars
02830.20 Steel Pipe
02830.21 Steel Tube
02830.22 Fasteners
02830.30 Galvanizing
02830.31 Repair of Hot-Dip Galvanizing
02830.40 Incidentals
02830.50 Acceptance

Section 02910 – Sign Materials
02910.02 Types of Signs
02910.75 Manufacturer's Warranty

Section 02920 – Common Electrical Materials
02920.22 Cable

Section 02925 – Traffic Signal Materials
02925.42 Traffic Signal Control Devices
02925.51 Traffic Signal Lamps
02925.65 Pedestrian Signal Heads
02925.68 Signal Head Covers

City of Bend Special Provisions to the
Oregon Standard Specifications for Construction

TABLE OF CONTENTS

PART 00200 – TEMPORARY FEATURES AND APPURTENANCES

Section 00220 – Accommodations for Public Traffic

Section 00225 – Work Zone Traffic Control

Section 00280 – Erosion and Sediment Control

Section 00290 – Environmental Protection

PART 00200 – TEMPORARY FEATURES AND APPURTENANCES

Section 00220 – Accommodations for Public Traffic

Comply with Section 00220, Accommodations for Public Traffic, of the Standard Specifications modified as follows:

00220.02 Public Safety and Mobility – ADD at end of bullet list:

- When performing trench excavation or other excavation across or adjacent to a travel lane on a roadway having a pre-construction posted speed greater than 35 mph, backfill the excavation, install surfacing, and open the roadway to traffic by the end of each work shift. Prior to opening the roadway to traffic install a "BUMP" (W8-1-48) sign approximately 100 feet before the backfilled area and a "ROUGH ROAD" (W8-8-48) sign approximately 500 feet ahead of the "BUMP" sign. If this requirement is not met, maintain all necessary lane or shoulder closures and provide additional TCM, including flagging, at no additional cost to the Agency. Do not use temporary steel plating to reopen the roadway.

- Unless the routes are closed and alternate routes have been designated in the TCP, do not place work zone signs or supports that will block existing walkways or existing bikeways.

- Notify the Engineer, in writing, at least 14 calendar days in advance of using an automated flagger assistance device (AFAD). Include in the notification the following information:

    - The AFAD specifications from the manufacturer.

    - The TCP for the work zone incorporating the AFAD with times, dates, location, and duration of operation.

00220.03,(b) Work Zone Notifications

(b) Closures

DELETE and REPLACE with the following:

- **Lanes** – A minimum of 72 hours before a lane closure begins.

- **Roads** – A minimum of 72 hours before closure. Also, notify in writing, all affected emergency services, school districts, and US Postal Service a minimum of 72 hours before any closure.

- **Bicycle and Pedestrian Facilities** – A minimum of 72 hours before a bike lane, sidewalk, and/or multi-use path closure. After receiving written approval, provide 48 hour public notification before the closure.

ADD the following paragraph at the end of bullets:

The Contractor shall give occupants of property fronting a street at least 48 hours notice before more than half the street is closed to vehicular traffic due to hi/her operations. The Contractor shall not close a street without prior knowledge of the Engineer and permission of the City of Bend. The Contractor is responsible for coordinating the closing of a street with all concerned and affected individuals and public agencies.

00220.40,(e) General Requirements

(e) Lane Restrictions –REPLACE with the following:

Do not close any traffic lanes and remove all barricades and objects from the roadway during the following periods:

(4) Special Events – ADD the following to the end of the sentence that starts and ends with, “Between noon on . . . final day of the special event”

The following special events will occur during this Project:

- _____

Section 00225 – Work Zone Traffic Control

Comply with Section 00225, Work Zone Traffic Control, of the Standard Specifications modified as follows:

00225.02 General Requirements - ADD the following after the last paragraph of this subsection:

(Fill in the blanks with the appropriate information.)

Install a "ROAD WORK AHEAD" (W20-1-48) sign with "FINES DOUBLE" (R2-6-36) rider on the _____ Highway, according to sign spacing "A" from the "TCD Spacing Table" shown on the standard drawings. Also, install an "END ROAD WORK" (CG20-2A-24) sign approximately 500 feet beyond each end of the Project, facing outgoing traffic. When mounting signs on concrete barrier in median areas, do not install the sign flag boards on the "FINES DOUBLE" rider or on the "ROAD WORK AHEAD" signs.

(Use the following paragraph when it is necessary to reduce the overall roadway width between positive barriers [for example: concrete barrier, guardrail, and falsework] to less than 19 feet.)

When the horizontal clearance for the roadway is less than 19 feet, install horizontal clearance (CW21-12-48) signs, identifying the narrowest width of the roadway. Locate these horizontal clearance signs as shown or as directed.

(Use the following paragraph when it is necessary to reduce the overall vertical clearance to less than 15 feet 3 inches.)

When the vertical clearance is less than 15 feet 3 inches, install low clearance (W12-2-48) and (OW12-2-36) signs. The clearance shown on the signs shall be 4 inches less than the shortest height of the opening. Locate these low clearance signs as shown or as directed.

00225.05 Contractor Traffic Control Plan – DELETE section and REPLACE with the following:

The Contractor will be allowed to use the Agency's TCP, modify the Agency's TCP, or use a different TCP. Submit the following, for approval, five calendar days before the preconstruction conference:

(a) Agency or Contractor TCP - If the Agency's TCP is used without modification, a written notification indicating that the Agency's TCP will be used without modification.

- **Bicycle and Pedestrian Facilities** – A minimum of 72 hours before a bike lane, sidewalk, and/or multi-use path closure. After receiving written approval, provide 48 hour public notification before the closure.

ADD the following paragraph at the end of bullets:

The Contractor shall give occupants of property fronting a street at least 48 hours notice before more than half the street is closed to vehicular traffic due to hi/her operations. The Contractor shall not close a street without prior knowledge of the Engineer and permission of the City of Bend. The Contractor is responsible for coordinating the closing of a street with all concerned and affected individuals and public agencies.

00220.40,(e) General Requirements

(e) Lane Restrictions –REPLACE with the following:

Do not close any traffic lanes and remove all barricades and objects from the roadway during the following periods:

(4) Special Events – ADD the following to the end of the sentence that starts and ends with, “Between noon on . . . final day of the special event”

The following special events will occur during this Project:

- _____

Section 00225 – Work Zone Traffic Control

Comply with Section 00225, Work Zone Traffic Control, of the Standard Specifications modified as follows:

00225.02 General Requirements - ADD the following after the last paragraph of this subsection:

(Fill in the blanks with the appropriate information.)

Install a "ROAD WORK AHEAD" (W20-1-48) sign with "FINES DOUBLE" (R2-6-36) rider on the _____ Highway, according to sign spacing "A" from the "TCD Spacing Table" shown on the standard drawings. Also, install an "END ROAD WORK" (CG20-2A-24) sign approximately 500 feet beyond each end of the Project, facing outgoing traffic. When mounting signs on concrete barrier in median areas, do not install the sign flag boards on the "FINES DOUBLE" rider or on the "ROAD WORK AHEAD" signs.

(Use the following paragraph when it is necessary to reduce the overall roadway width between positive barriers [for example: concrete barrier, guardrail, and falsework] to less than 19 feet.)

When the horizontal clearance for the roadway is less than 19 feet, install horizontal clearance (CW21-12-48) signs, identifying the narrowest width of the roadway. Locate these horizontal clearance signs as shown or as directed.

(Use the following paragraph when it is necessary to reduce the overall vertical clearance to less than 15 feet 3 inches.)

When the vertical clearance is less than 15 feet 3 inches, install low clearance (W12-2-48) and (OW12-2-36) signs. The clearance shown on the signs shall be 4 inches less than the shortest height of the opening. Locate these low clearance signs as shown or as directed.

00225.05 Contractor Traffic Control Plan – DELETE section and REPLACE with the following:

The Contractor will be allowed to use the Agency's TCP, modify the Agency's TCP, or use a different TCP. Submit the following, for approval, five calendar days before the preconstruction conference:

(a) Agency or Contractor TCP - If the Agency's TCP is used without modification, a written notification indicating that the Agency's TCP will be used without modification.

If the Contractor will be using a modified Agency TCP, if no Agency TCP exists, or if the Contractor will not be using the Agency TCP, include the following:

- Proposed TCP showing all TCM and quantities of all TCD
- Proposed order and duration of the TCM
- A detailed temporary striping plan

(b) Tourist-Oriented Directional (TOD) and Business Logo Signs - Two copies of a sketch map of the Project showing all existing tourist-oriented directional (TOD) and business logo signs and a written narrative describing how these signs will be kept in service and protected throughout all the construction stages.

- If there are no TOD signs on the project, a written notification that no TOD signs exist within the project limits.

ADD at end of section:

Failure to maintain traffic control devices in accordance with the plans and specifications shall result in the immediate suspension of work. During suspension of the work for failure to maintain traffic control devices, workdays will continue to be charged to the contract. The following representatives of the City of Bend shall have the authority to suspend work for failure to maintain traffic control devices:

- City Engineer or his/her representatives
- Street Maintenance Supervisor
- Uniformed Officers of the Bend City Police Department

During suspension of work, for any reason, the Contractor shall continue to be responsible for and shall maintain temporary traffic control.

00225.11 Temporary Signing – DELETE text (“Furnish new or acceptable temporary signs….”) and REPLACE with:

Furnish temporary signs meeting the requirements of the "Acceptable" category shown in the American Traffic Safety Services Association (ATSSA) "Quality Standards for Work Zone Traffic Control Devices" handbook and the following:

00225.11,(a) Sign Supports – ADD the following subsection:

(5) Lightweight Sign Substrate – Use lightweight sign substrates from the QPL.

00225.11,(b)(5) Square Tube Sign Supports – DELETE and REPLACE with the following:

(5) Perforated Steel Square Tube Sign Supports – Use perforated steel square tube sign supports from the QPL and as shown on the standard drawings.

00225.13,(d) Plastic Drums – DELETE sentence that begins ("Provide drums with…") and REPLACE with the following:

Use retroreflective drum sheeting meeting the requirements of ASTM D 4956 Type III or Type IV.

00225.41(b),(5) Square Tube Sign Supports – DELETE and REPLACE with the following:

(5) Perforated Steel Square Tube Sign Supports – Perforated steel square tube sign supports may be used as a substitute for wood sign posts. Install perforated steel square tube sign supports as shown on the standard drawings.

00225.43,(g) Temporary Striping – ADD the following after paragraph that begins and ends "When scheduled installation . . . if aligned as above":

For temporary striping on new bridge deck surfaces, use temporary removable tape.

00225.62,(b) Temporary Impact Attenuators – DELETE paragraph ("When impact attenuator…") and REPLACE with the following:

When impact attenuator, truck-mounted attenuator, or narrow site attenuator systems are used, have enough modules, cartridges, components and replacement parts on site to replace one complete installation or have on site a complete replacement attenuator. Re-stock replacement items or complete replacement attenuators within 24 hours of use. All modules, cartridges, components and replacement parts, and replacement attenuators not used remain the property of the Contractor.

00225.82 Temporary Barricades, Guardrail, Barrier, and Attenuators – ADD the following subsection:

(e) Temporary Impact Attenuator Repair – Temporary impact attenuator repair will be measured on a unit basis as follows:

- Sand barrel systems will be the replacement of damaged sand modules.

All other systems will be the repair or complete replacement of the attenuator system.

00225.87(a) Flaggers – Add the following after sentence ("Flaggers will be . . ."):

Flagger not approved by the Engineer or included on the approved traffic control plan and schedule will not be measured for payment.

(Use the following Subsection .90(a-1) when impact attenuators are required.)

00225.90,(a),(1) Pay Quantities – DELETE paragraph ("All TCD damaged by…") and REPLACE with:

All TCD damaged by public traffic and replaced by the Contractor, except temporary signing, temporary electrical signs, and portable temporary traffic signals, will be paid for at the Contract price for the pay items listed in the Contract Schedule of Items or in approved Contract change orders, unless otherwise specified. Payment for replacing damaged TCD will only be made when:

00225.92 Temporary Barricades, Guardrail, Barrier, and Attenuators – ADD the following to pay item list:

(n) Repair Temporary Impact Attenuator, ____ Each

ADD the following paragraph after paragraph ("Item (m) includes . . ."):

Item (n), the words "Sand Module" or the type of attenuator, if applicable, will be inserted in the blank. Item (n) includes replacement of sand modules damaged by public traffic or includes repair or complete replacement of impact attenuators damaged by public traffic.

DELETE paragraph that begins ("No separate or additional . . .") REPLACE with the following:

No separate or additional payment will be made for temporary impact attenuator replacements, replacement modules, cartridges, components, or replacements parts that are required to be on site according to 00225.62(b) or for cleaning and removing debris from impacts.

00225.97 Flaggers and Flagger Station Lighting – ADD the following after the paragraph that begins ("Flaggers performing work other…."):

Payment will not be made for Flaggers not included in the approved Traffic Control Plan and Schedule or approved by the Engineer.

Section 00280 – Erosion and Sediment Control

Comply with Section 00280, Erosion and Sediment Control, of the Standard Specifications modified as follows:

00280.01 National Pollutant Discharge Elimination System – DELETE and REPLACE with the following:

Comply with all federal, state and local laws, rules and regulations, including but not limited to, the national Pollutant Discharge Elimination System (NPDES) MS4 and 1200C Permit(s); and the WPCF UIC Permit or rule authorization requirements in its absence. Copies of any local or state agency/government permit(s) are available from the permitted agency/government and may be more stringent than these Specifications.

00280.02 Erosion and Sediment Control Plan on Agency Controlled Lands – REPLACE the bullet ("A Contractor-developed, . . .") with the following:

- A Contractor-developed "construction" ESCP that incorporates the City's ESCP elements and any modifications needed to ensure full compliance with applicable federal, state, and local laws, rules, regulations and permits.

00280.02 Erosion and Sediment Control Plan on Agency Controlled Lands – REPLACE the bullet ("A narrative as described . . .") with the following:

- A narrative incorporating the elements of subsection (a), below, and any applicable federal, state, and local regulatory and permitting requirements.

00280.03 Non-Agency Controlled Lands ESCP – REPLACE the bullet ("A Contractor-developed ESCP . . .") with the following:

- A Contractor-developed ESCP for each unique site covered under applicable federal, state, or local permits or regulations.

00280.14,(a) Plastic Sheeting - ADD at the end of the sentence ("Minimum 6 mil thick . . . ") the following:

Bio-degradable Erosion Control Blankets (ECBs) and Bio-degradable Turf Re-Enforcement mats (TRMs) under (a) Plastic Sheeting.

00280.15,(a) Check Dams – REPLACE the bullet **"Type 2 Straw Bales"** requirement with the following:

Oregon Department of Agriculture Weed-Free certified standard rectangular straw bales meeting the requirements of 01030.15.

00280.16,(a) Construction Entrances - REPLACE bullet for **Aggregate** with the following:

Aggregate size for construction of the pad shall be 3-6 inch stone. If tracking aggregate onto street is concern, 6-8 inch stone can be used.

00280.30 Erosion and Sediment Control Manager – REPLACE the bullet ("Experience in all major . . .") with the following:

Experience in all major disciplines of public project construction.

00280.30 Erosion and Sediment Control Manager – REPLACE the bullet ("Monitor water quality in . . .") in the second set of bullets with the following:

Monitor water quality in receiving streams and UICs in the vicinity of the Project site.

00280.40 Installation – REPLACE the sentence ("Provide continuous erosion . . .") with the following:

Provide continuous erosion and sediment control throughout the period the Contractor is responsible for project sites under Contract as determined by the Engineer.

00280.41,(a) Disturbance Limits – DELETE and REPLACE with the following:

(a) Disturbance Limits – Flag all construction site-clearing limits with high visibility flagging and do not disturb areas outside the flagging limits. Flag all drainage and infiltration areas with high visibility flagging and do not disturb or compact soil within the flagging limits. Maintain the flagging during Project construction.

00280.41,(c) Wet Season Work and Temporary "Work Suspension – REPLACE sentence ("Wet season work is . . . and May 30") with the following:

Wet season work is defined as work between October 1 and June 30.

00280.42,(a) Soil Exposure Limitations - REPLACE bullet(s) ("East of the Cascades (October 1 through April 30)" and ("East of the Cascades (May 1 through September 30") with the following:

- **East of the Cascades (October 1 through June 30)** – Stabilize all other areas within 7 days of exposure.

- **East of the Cascades (July 1 through September 30)** – Stabilize construction areas within 10 days of exposure.

Section 00290 – Environmental Protection

Comply with Section 00290, Environmental Protection, of the Standard Specifications modified as follows:

00290.20(c)(3)(a) Burnable Materials – DELETE subsection in its entirety and add as follows:

00290.20(c)(3)(b) Wood Matter – REPLACE with the following:

> **(a) Woody Matter** – Woody matter, excluding Preserved or Coated Wood per (c) this section, may be chipped to a size of no more than 3 inches in any direction, then uniformly spread over selected landscape areas, as directed, in loose layers not more than 3 inches thick. Burying wood, stumps, or other woody material is not allowed.

Re-alphabetize remaining sections as follows:

(b) Preserved and Coated Wood

(c) Concrete and Masonry

(d) Disposal on Agency Owned Lands

(e) Off-Site Disposal

00290.30(a)(1) General – REPLACE the bullet that begins ("Comply with the erosion . . .") with the following:

- Comply with the erosion prevention and sediment control requirements of Section 00280, Erosion and Sediment Control, local requirements, and all applicable DEQ NPDES 1200 Permit requirements.

City of Bend Special Provisions to the Oregon Standard Specifications for Construction

TABLE OF CONTENTS

PART 00300 – ROADWORK

Section 00310 – Removal of Structures and Obstructions

Section 00320 – Clearing and Grubbing

Section 00330 – Earthwork

Section 00340 – Watering

Section 00350 – Geosynthetic Installation

Section 00390 – Riprap Protection

PART 00300 – ROADWORK

Section 00310 – Removal of Structures and Obstructions

Comply with Section 00310 of the Standard Specifications modified as follows:

00310.41(a) General – DELETE and REPLACE with the following:

Where an abutting structure or part of a structure is to be left in place, make clean, smooth, vertical cuts with a saw or other approved cutting device. Avoid operations that may damage any portion of the remaining structure. Prevent any saw-cut slurry from reaching the storm drain system through appropriate measures (e.g. barriers and wet vacuuming).

00310.80 Measurement – ADD to the end of the bullet "**Length and Area**" as follows:

Asphalt pavement cutting will be the length of the actual cut based on a depth of 6 inches. If the depth is greater than 6 inches, the length will be adjusted by converting to an equivalent number of feet on a proportionate length basis.

00310.92 Separate Item Basis – ADD the following to the **"Pay Item"** list:

(g.) Asphalt Pavement Saw Cutting.....Foot

00310.92 Separate Item Basis – ADD the following under sentence ("Item (d) includes. . .")

Item (g) applies to asphalt pavement saw cutting when shown.

Section 00320 – Clearing and Grubbing

Comply with Section 00320 of the Standard Specifications modified as follows:

00320.02(a) Clearing – REPLACE bullet that begins ("Preserving trees and other…") with the following:

- Preserving trees and other vegetation or natural areas designated to remain in place.

00320.40(b)(1) Within the Work Areas – ADD the following:

Trees, shrubbery and flower beds designated by the Engineer shall be left in place and care shall be taken by the Contractor not to damage or injure such trees, shrubbery or flower beds by any of his/her operations.

Where ornamental trees exist in parking areas and are not to be removed, it shall be the Contractor's responsibility to trim low limbs, which will interfere with the normal operation of his/her equipment. The trimming shall be performed in a professional manner by competent personnel prior to his/her machine operations and in such a manner as the Engineer may direct.

The Contractor shall be responsible for all damages to existing improvements resulting from his/her operations.

Add the following subsection:

00320.40(b) Preserving and Trimming Vegetation – ADD the following subsection:

(4) Preservation Zone – Where the plans call for the preservation of trees, the Contractor shall provide a preservation plan to the Engineer, that shall include the following elements, as appropriate:

The Contractor shall fence a preservation zone around the tree to a radius of 1.5 times the crown (drip line) of the tree. This fence shall be plastic mesh fence continuous with no gaps unless otherwise directed. The Contractor shall not operate equipment in this preservation zone except to construct specific items passing through the zone, such as utilities. The preservation zone shall not be used for the storage of materials. Clearing of shrubs and non-designated plant materials in the preservation zone shall be to ground level. There shall be no grubbing in the preservation zone unless specifically directed by the Engineer.

If the nature of the project is such that the preservation zone cannot be fully enclosed as designated above, the Contractor may use the preservation zone lying outside the fence if the Contractor maintains an 8-inch deep layer of wood chips over the

unenclosed preservation zone. The Contractor shall make every attempt to minimize operations in this unenclosed zone.

The Contractor shall routinely water the preservation zone to keep the area moist.

As soon as possible, but not more than two weeks prior to any required construction in a preservation zone per the exceptions above, the Contractor shall thoroughly saturate the preservation zone with water.

When necessary to excavate or trench through a preservation zone, the Contractor shall neatly trim all roots disclosed by the excavation. The Contractor shall not tear or pull roots from the ground with construction equipment, but shall cleanly saw them immediately when disclosed by the equipment. An exception shall be rock saws. However, rock saws shall be operated so as to minimize the shattering of roots.

Trenches in a preservation zone shall be backfilled as soon as possible to minimize the drying of exposed roots. Where trenches need to be open longer than six hours, exposed roots on the trench wall sides abutting trees to be preserved shall be covered with burlap and kept moist.

00320.42 Ownership and Disposal of Matter – DELETE and REPLACE subsection with the following:

00320.42 Disposal of Matter – Dispose of all matter and debris according to 00290.20. Open burning of materials is prohibited within the City limits.

00320.90 Payment – ADD the following after the paragraph that starts (“Payment will be payment . . .”):

No separate or additional payment will be made for plastic mesh fencing.

Section 00330 – Earthwork

Comply with Section 00330 of the Standard Specifications modified as follows:

00330.20 Tamping Foot Rollers – REPLACE "115 tons" in the sentence that begins ("If specified, use . . .") with the following:

"15 tons"

00330.40(b) Preservation of Existing Surfacings – ADD the following to the end of this subsection:

AC pavement cuts shall be straight lines, having vertical faces and are required wherever existing pavement is to be matched or removed to a line designated on the plans and as directed by the Engineer. Where so specified, AC pavement cuts shall be saw cut. Saw-cut slurry shall be kept out of the storm drain system facilities through appropriate measures including but not limited to temporarily blocking downstream storm drains, shoveling, and/or wet vacuuming and removing the slurry from the site.

When potholing is required to locate existing underground facilities the City prefers 8"-12" circular holes to be used vs the standard square opening. Asphalt coupons may be epoxied/glued back with an approved adhesive. Larger openings will be approved on a case by case basis at the discretion of the City.

00330.41(a)(5) Waste Materials – REPLACE subsection with the following:

Unless otherwise specifically allowed and subject to the requirements of 00280.03, dispose of materials, classed as waste materials in 00330.41(a-3) and 00330.41(a-4), outside and beyond the limits of the Project and Agency controlled property according to 00290.20. Do not dispose of materials on wetlands, either public or private, or within 300 feet of rivers or streams.

00330.41(a)(7) Abandoned Pipes and Miscellaneous Matter – ADD All service lines will be abandoned at the main unless otherwise approved by the City. All franchise utilities will remove abandoned facilities unless otherwise approved by the City. Any abandoned facility will be clearly located and recorded on the As-built drawings and submitted to the City. Per the Oregon dig law abandoned facilities remain the responsibility of the utility company.

00330.70 General REPLACE the bullet that begins ("In planting and seeding . . .") with the following:

- In planting and seeding areas, remove all rocks, boulders, and vegetative matter except that necessary to protect preserved areas and to comply with erosion and sediment control as designated in the Erosion and Sediment Control Plan.

(Use the following subsection .82 on embankment projects)

00330.82 Embankment Basis Measurement

In the paragraph that begins (“When measurement of earthwork…”), REPLACE the sentence that begins “Measurement will be limited to…” with the following:

Measurement will be limited to the lines, grades, and slopes of the original ground contours established before the Contractor begins any Work on the Project.

In the paragraph that begins ("The quantities of embankment measured for payment will not include…"), ADD the following bullet after the bullet that begins (“Any additional quantities . . .”):

- Any additional quantities required due to clearing and grubbing operations.

(Use the following subsection .91(d) on excavation projects that include Section 00331 - Subgrade Stabilization.)

00330.91(d) General Excavation – DELETE the bullet that begins ("Includes unsuitable material . . .").

00330.92 Kinds of Incidental Earthwork – Delete the bullet that begins ("If shown on the plans…") and ADD the following bullet(s) to the end of the bullet list:

- On embankment projects, additional quantities of materials required due to clearing and grubbing operations and compaction requirements within embankment limits.

- On embankment projects, earthwork required for driveways and road approaches. Earthwork for driveways and road approaches will be that which is outside the neat line limits shown on the typical section(s).

Section 00340 – Watering

Comply with Section 00340 of the Standard Specifications modified as follows:

00340.10 Water – ADD the following to the end of this subsection:

For a charge, the City can provide water to the Contractor from a fire hydrant or similar source. The Contractor must make an application to the City for such service.

Section 00350 – Geosynthetic Installation

Comply with Section 00350 of the Standard Specifications modified as follows:

00350.10 Materials – ADD the following to the end of this subsection**:**

Provide manufacturer's certifications complying with 02320.10(c) for the following geosynthetic(s):

	Certification	
Geotextile	**Level A**	**Level B**
Drainage, Type 1		
Drainage, Type 2		
Riprap, Type 1		
Riprap, Type 2		
Subgrade		
Embankment		
Pavement Overlay		
Geogrid		
_____		
_____		

Section 00390 – Riprap Protection

Comply with Section 00390 of the Standard Specifications modified as follows:

00390.11(b) Test Requirements – REPLACE 8" under the "Requirement" column next to "Sediment Height" with the following:

8.0"

City of Bend Special Provisions to the Oregon Standard Specifications for Construction

TABLE OF CONTENTS

PART 00400 – DRAINAGE AND SEWERS

Section 00405 – Trench Excavation, Bedding, and Backfill

Section 00445 – Sanitary, Storm, Culvert, Siphon, and Irrigation Pipe

Section 00470 – Manholes, Catch Basins, and Inlets

Section 00480 – Drainage Curbs

Section 00490 – Work on Existing Sewers and Structures

Section 00495 – Trench Resurfacing

PART 00400 – DRAINAGE AND SEWERS

Section 00405 – Trench Excavation, Bedding, and Backfill

Comply with Section 00405, Trench Excavation, Bedding, and Backfill, of the Standard Specifications modified as follows:

405.02 Definitions – REPLACE the definition for ("**Common Excavation**") with the following:

The removal of all material. This includes excavation of rock that may require removal drilling and blasting, wedging, sledging, barring or breaking up with power tools.

405.02 Definitions – REPLACE the definition for ("**Rock Excavation**") with the following:

The Agency does not differentiate between Common Excavation and Rock Excavation

405.12 Bedding - REPLACE the contents of this section with the following:

For all pipes, unless otherwise directed, furnish ¾"-0" base aggregate conforming to 02630.10.

405.13 Pipe Zone Material – REPLACE the contents of this section with the following:

For all pipes, unless otherwise directed, furnish ¾"-0" base aggregate conforming to 02630.10.

Description

00405.14 Trench Backfill – ADD the following subsections:

(f) Concrete Backfill – Concrete backfill shall conform Section 0440.12 CGC.

(g) Sand Cement Slurry (SCS) – Sand Cement Slurry shall conform to the requirements of the Oregon Department of Transportation Specification for Class C bedding. Sand Cement Slurry shall consist of at least 3/4 sack of Portland cement per cubic yard of sand plus water, with a 7-inch slump plus or minus 1-1/2.

00405.42 Rock Excavation – DELETE in its entirety: (The Agency does not differentiate between Common Excavation and Rock Excavation.)

00405.46(c) Trench Backfilling – ADD the following subsections:

(4) Concrete Backfill – Backfill the trench above the pipe zone with concrete backfill as required by the details and only when approved by Engineer.

(5) Sand Cement Slurry – Backfill the trench above the pipe zone with sand cement slurry as required by the details.

00405.46(c) Trench Backfilling – ADD the following:

Trench backfill shall be tested at one passing test for each 3 feet of fill and 100 LF of trench (e.g., 12-foot to 15-foot depth class shall require four to five tests per 100 LF or as directed by the Engineer. Passing test shall meet the requirements for trench compaction in that segment of trench backfill. All sampling and testing, including material certifying tests shall be performed by an independent testing laboratory. Sampling locations shall be determined by the City of Bend. All results, including failing tests, shall be submitted to the City of Bend prior to any subgrade inspection. All compaction testing shall be completed in the presence of a City of Bend representative authorized by Engineer to witness test.

Where trench depths or conditions preclude density testing at deeper elevations because of worker safety concerns, the placement and compaction of backfill will be observed and documented on a full-time basis by contractor's approved testing agency until backfill reaches an elevation at which density testing can commence.

Density testable material shall comply with section 330.43(b) and be tested compacted in place. All compaction reports must be submitted to the City before any pipe testing can commence.

00405.80 Measurement – DELETE and REPLACE with the following:

(a) Linear Foot Basis – The length of trench shall be measured horizontally from centerline to centerline of manholes or to the end of the pipe, whichever is applicable. Measurement of the various depth classes as stated in the Schedule of Bid Items shall be from the pipe invert as constructed to the design subgrade elevation at the point of measurement.

00405.90 Payment – DELETE and REPLACE with the following:

Payment for TRENCH EXCAVATION shall be at the unit price bid per linear foot at the specified diameter for the depth class as measured. Payment shall include all materials, tools, labor, equipment, bedding, backfill, and incidentals required to excavate and backfill the trench as specified. There shall be no separate payment for rock excavation unless specifically called for in the Schedule of Bid items.

Incidental Basis – When not listed in the Schedule of Bid Items as a separate pay item, TRENCH EXCAVATION shall be considered incidental to the price bid for pipe.

Section 00440 – Commercial Grade Concrete

00440.12 Properties of CGC – DELETE and REPLACE with the following mix designs:

The following are the minimum requirements for CGC placed in the City. Alternative mix designs may be submitted for approval. The "optional" additives may be used on a project by project basis to meet weather conditions and workability. Please provide a mix design to the City as required by these standards and approved permit.

a. **curb**
   i. **6.1 sack concrete mix (574 lb cement) 4,000 psi min**
   ii. **0.45 w/c (±1%)**
   iii. **6.0% (±1.5%) Air entrainment**
   iv. **F-100 Fiber (.5 bag per yard)**
   v. **3" max slump**
   vi. **Slag 0-30% (optional)**
   vii. **AEA 90 (optional)**
   viii. **Water reducer (optional)**
   ix. **Superplasticizer may be used (Like VMA 358)**

b. **Flat work**
   i. **6.1 sack concrete mix (574 lb cement) 4,000 psi min**
   ii. **0.45 (±1%) water to cement ratio**
   iii. **6.0% (±1.5%) Air entrainment**
   iv. **F-100 Fiber (.5 bag per yard)**
   v. **6" max slump**
   vi. **Slag 0-30% (optional)**
   vii. **AEA 90 (optional)**
   viii. **Water reducer(optional)**
   ix. **Superplasticizer may be used (Like VMA 358) (optional)**

Any material on substitutions are on an approved equal basis.

00440.40(d) Weather – DELETE and REPLACE with the following:

Concrete is to be placed when the air temperature in the work zone is at least 35°F. All concrete placed below 35° shall be approved under the following prescribed cold weather concrete plan:

Concrete may be placed when the ambient air temperature is 25° F and rising, and the projected day time temperature high will be above 35° F for 2 days (unless otherwise approved by the City Engineer);

- Concrete shall not be poured below 25° F;
- Concrete may not be poured on frozen ground;
- If subgrade is frozen, all frozen material must be removed and new compacted base must be placed before concrete is poured;
- Concrete subgrade must be inspected by the City prior to placing concrete;

- At a minimum, ambient temperatures from 30°F to 40°F hot water will be used to maintain concrete temperatures not less than 55°F at placement;
- At a minimum, ambient temperatures from 25°F to 30°F hot water will be used to maintain concrete temperatures not less than 55°F at placement and 1% non-Chloride accelerator;
- Provide batch tickets to City Engineering Inspector;
- The City may require the use of a Hi/low thermometer to record the temperature of the placed concrete for 7 days. Concrete must be maintained at 40° during this time;
- If concrete temperature falls below 40° F the City may choose to have the concrete removed and replaced at the contractors/permittee expense, and;
- Prevent concrete from freezing for 7 calendar days after concrete is placed;
- At a minimum cover all concrete at night if the seven day forecast shows a potential for freezing. It is up to the contractor to determine the best practice for protecting the concrete.
- Alternate cold weather concrete plans may be submitted for review but approval is at the City's discretion.

Section 00445 – Sanitary, Storm, Culvert, Siphon, and Irrigation Pipe

Comply with Section 00445, Sanitary, Storm, Culvert, Siphon, and Irrigation Pipe, of the Standard Specifications modified as follows:

Materials

00445.10 General – DELETE and REPLACE with the following:

Storm and sanitary sewer pipe shall be designated as gravity, force main, pressure, or vacuum for purposes of this specification. Unless otherwise specified, all gravity sewer, pressure pipe, or vacuum pipe in the project shall be polyvinyl chloride (PVC). Where more than one type of material is indicated as appropriate, the type required shall be designated on the plans. Furthermore, all materials shall be new of U.S.A. domestic manufacture that meet all AWWA, APWA, Federal and, State code requirements, as well as local City and County code requirements. Additionally, strict attention shall be given to workmanship, and materials shall be of good quality.

All new sanitary sewer collection installations shall be gravity systems. No pressure or vacuum systems will be allowed for collection. Pressure systems for transmission are allowed.

00445.11 Materials – DELETE reference to Specification 02410.70 for Polyvinyl Chloride (PVC) Pipe in the following tabular materials:

00445.11 Materials – ADD the following subsections:

(h) Gravity Sanitary and Storm Sewer Pipe

(1) Rigid PVC pipe compounds used in gravity sewer pipe shall conform to ASTM D-1784, Rigid Polyvinyl Chloride (PVC) Compounds and Chlorinated Polyvinyl Chloride (PVC) Compounds.

(2) PVC pipe shall conform to ASTM D-3034 standards dimensions ratio not to exceed 35 or to ASTM F789, minimum pipe stiffness of 46 psi. Provide manufacturer's certification, including test results, for all materials supplied under this specification.

(3) Where minimum cover cannot be maintained, or where directed by the Engineer, pipe shall be C-900 water pipe meeting the requirements of AWWA C-900 Specifications, Polyvinyl Chloride (PVC) Pressure Pipe.

(4) Polyethylene ADS N-12 Dual Wall Flexible Water Tight Pipe used in gravity storm sewer pipe shall conform to ASTM F 2648 and shall have a smooth interior and annular exterior corrugations.

(i) Pressure Sewer Pipe

(1) Pipe shall be C900 for pipe greater than 4 inches in diameter or Schedule 40 for pipe 4 inches in diameter and less and have a minimum DR of 18 unless specified otherwise.

(2) The pipe shall be wrapped four (4) times per 20-foot section with marking tape to differentiate this pipe from the white or blue plastic pipe used in potable water applications.

(3) Pipe and fittings 4 inches and smaller in diameter shall be assembled using glued joints. Pipe above 4 inches in diameter shall be gasketed. All fittings above 4 inches in diameter shall use mechanical joints with the exception of service tees, which shall use glued or mechanical joints.

(4) Refer to 00445.48 for marking wire specification.

(j) Jointing Materials – Polyvinyl Chloride Pipe

(1) Gravity Sewer Pipe – Joints shall be rubber gasketed and water tight conforming to ASTM D-3212 for gravity sewers. Gaskets shall conform to ASTM F-477. Lubricant jointing shall be as approved by the pipe manufacturer.

(2) Pressure Sewer Pipe – Joints shall be rubber gasket or solvent welded depending on pipe size.

(3) Gravity Storm Sewer - Joints shall be water tight per requirements of ASTM D 3212. Gaskets shall conform to ASTM F 477. Joint lubricant as approved by manufacturer.

Rubber gasketed joints shall conform to the manufacturer's recommendations for the pressure class specified. Gaskets shall conform to ASTM F-477. Lubricant jointing shall be as approved by the pipe manufacturer.

Solvent welded joints shall conform to the applicable requirements of ASTM D2466 and ASTM D2467.

(k) Fittings – Polyvinyl Chloride Pipe

(1) Gravity Fittings

a. PVC pipefittings shall conform to ASTM D-3034, standard dimensions ratio not to exceed 35 or to ASTM F789, minimum pipe stiffness of 46 psi. Provide manufacturer's certification, including test results, for all materials supplied under this specification.

b. All fittings shall be the same as the joints used on the sewer pipe. Caps or plugs shall be furnished with each tee outlet or stub with the same type gasket and joint as furnished with the service connection pipe specified for future service connections. The plug or cap shall be banded or otherwise secured to withstand all test pressures involved without leakage.

c. Each tee for future service connection shall be marked with marking tape. The face of the curb shall be marked with an "S" locating the service crossing. Where no curbs are being installed, the end of service tee shall be marked with the wye and riser pipe and Brookes Box at finished grade.

(2) Pressure Sewer Fittings

a. Plug Valves – Type V405 Eccentric (Isolation Valves)

Plug valves shall be a non-lubricated type and rated at 175psig CWP drip-tight shutoff, with pressure from either direction, and shall have a cast iron body with flanged ends. The valve-closing member shall rotate 90° degrees to a full open or closed position with the plug rotating out of the sewage flow. The lug shall be cast iron with round or rectangular port of no less than 80 percent of the connecting pipe area. The plug shall be coated with Buna-N or Hycar elastomers with seats Type of 316 stainless steel or nickel. The valve stem bearing shall be self-lubricating stainless steel or reinforced Teflon, with the stem seal multiple V-rings (Chevron), U-cups, or O-ring of nitrile rubber, and shall include grit seals on the valve stem. Valves shall be polymer coated inside and out, and have a non-rising stem. Unless otherwise specified, plug valves shall be supplied with a 2" operating nut. In vault service boxes or above ground plug valves shall be supplied with hand wheels.

Approved manufactures:

1. Keysone; Ballcentric
2. Dezurik; Series 100
3. Victaulic; vic-Plug

b. Check Valves – Check valves on pressure sewer mains shall be external lever and weight actuated, iron-body, plastic or brass, flanged-end, resilient seat check valves equivalent to Kennedy model 106 ALS. APCO model 104P3 with backflow device may be used in lieu of the Kennedy check valve in certain applications.

c. Pressure Sewer MH and C.O. – Cleanouts shall be constructed as indicated on the Standard Drawings. The manhole shall be a 48-inch manhole as illustrated in the Standard Drawings.

d. Pressure Pipe Air-release Valves – Air-release valves shall be constructed as indicated on the Drawings, complete with 2-inch shut-off valve, 1-inch blow-off valve, and back flushing apparatus, APCO Model 400, Valmatic 302, or equal. Valve shall provide for an operating pressure range of 0-50 psi.

e. Hot Tap Specifications – 2-inch and 3-inch saddles shall be epoxy coated ductile iron body saddles with double stainless steel straps equivalent to type 202S as manufactured by Romac.

All taps larger than 2 inch shall be stainless steel sleeves equivalent to type SST service saddles as manufactured by Romac.

f. Valve Boxes – Valve boxes subject to traffic loading shall be a two-piece grade adjustable box. The valve box shall have 7-inch I.D. with a slip top section without a dirt flange on the bottom as shown in the Standard Drawing. Valve boxes shall be caste iron East Jorden Iron Works #363912 or equal. The bottom extension piece shall be a single piece of 6" 3034 pipe of the proper length for to allow for 6"-12" inches of overlap. The word "SEWER" or letter "S" shall be cast into the top of the lid. Valve boxes shall not be located in driveways.

g. Restraining Device – Restraining devices used on pressure sewer shall be a full-circumference wedge-type device as manufactured by Romac Industries. Restraining device shall be Grip Ring™ or approved equal.

(3) Sewer Lateral Fittings

(a) Sewer Service Markers –Each tee for future service connection shall be marked with marking tape. The face of the curb shall be marked with an "S" locating the service crossing. Where no curbs are being installed, the end of service tee shall be marked with the wye and riser pipe and Brookes Box at finished grade.

(b) Service Saddles – Gravity line service saddles shall be Romac "CB" type saddles or equivalent with stainless steel strap. No other type shall be permitted. Pressure line services shall be as defined in Subsection 00303.2.15F.2. On 12-inch or larger pipe, an "Insert-a-tee" tap or equal, as approved by the City Engineer, is required.

(c) Swing Check Valves – Swing valves shall be APCO series 100, Legend Model T451, or equivalent U.S. Brands. The check valve shall be capable of passing a 2-inch diameter solid.

(d) Plug Valves – Non-lubricated 175 psig rated type CWP drip-tight shutoff with pressure from either direction cast iron body with flanged ends. The valve-closing member shall rotate 90° degrees to a full open or closed position with the plug rotating out of the sewage flow. The lug shall be cast iron with round

or rectangular port of no less than 80 percent of the connecting pipe area. The plug shall be coated with Buna-N or Hycar elastomers with seats Type of 316 stainless steel or nickel. The valve stem bearing shall be self-lubricating stainless steel or reinforced Teflon, with the stem seal multiple V-rings (Chevron), U-cups, or O-ring of nitrile rubber, and shall include grit seals on the valve stem. Valves shall be polymer coated inside and out, and have a non-rising stem. Unless otherwise specified, plug valves shall be supplied with a 2" operating nut. In vault service boxes or above ground plug valves shall be supplied with hand wheels.

Approved manufactures:

Keysone; Ballcentric
Dezurik; Series 100
Victaulic; vic-Plug

00445.40 General – ADD the following subsection:

(h) Sewer Taps – Sewer taps shall be performed only by competent personnel of companies' pre-certified for **sewer** taps by the City of Bend. Tapping equipment shall be used only for sewer taps. A representative of the City Engineer must witness every sewer tap.

00445.40(c) Pipe Distribution and Handling – ADD the following:

No more pipe shall be laid out along open ditch, prior to installation, than can be laid in one work shift. Pipeline materials shall be removed daily from a storage area and placed in trench.

00445.43(c) PVC Pipe – ADD the following after sentence that begins ("Cut the pipe…"):

Fittings, plugs, and caps shall be installed in pipe in the manner described within these specifications or by the approval of the City Engineer, or his/her representative. For dissimilar pipes, (e.g. C-900 to 3034), a hard PVC transition type adapter coupling or a Maxx Adaptor, or approved equal, shall be used. Special conditions encountered for which suitable adapter couplings are not available, shall be referred to the City Engineer for consideration of an approved method. Fern-co and Calder Coupling type fitting will not be allowed.

(1) Solvent Welded Joints – After a length of Solvent Weld pipe is placed in the trench, both the spigot end and the receiving bell shall receive a thorough application of primer and glue as per the manufacturer's specifications. The pipe shall be centered, seated, and rotated at least 90°. The pipe shall be brought to correct line and grade and secured in place with approved backfill material. Pipe

and fittings which do not allow a sufficient and uniform space for jointing shall be removed and replaced with pipe and fittings of proper dimensions to ensure such uniform space. Precaution shall be taken to prevent dirt from entering the joint space.

(2) Number of Pipes Laid Before Jointing – Solvent Weld and Rubber gasket joint pipe shall be connected as hereinafter specified as soon as they are placed in the trench.

00445.46 Concrete Blocks – ADD the following subsection:

(a) Pressure Sewer Thrust Blocking – Thrust blocks shall be placed at all angle points on pressure sewer. Where approved by the City Engineer, restrained joints may be used on pressure sewer lines in lieu of thrust blocks or deadmen.

00445.48 Tracer Wire – DELETE and REPLACE as follows:

Install tracer wire in all trenches for sanitary and storm sewers outside of roadways and bends. Place the tracer wire directly over the pipe centerline and on top of the pipe zone material. Place a branch tracer wire over each pipe connected to the main sewer. All sanitary and storm sewers not located under paved roadway, shall be provided with two layers of tracer wire as required in the standard drawings. Tracer wire to be installed in 1-inch diameter conduit unless otherwise specified.

Make tracer wire splices using a solderless connection kit that effectively moisture seals two or more conductors for direct burial and securely join the wires both mechanically and electrically. Insulate splices to be moisture and waterproof. Splices wrapped with tape will not be accepted as waterproof. Have all splice kits approved prior to installation.

Test all tracer wire with locating equipment prior to acceptance and provide documentation to City of completed test.

Finishing, Clean Up, and Testing

00445.70(b) Siphon, Irrigation, and Sanitary Sewer Installations – ADD the following:

No sewer line will be televised until all inverts and channels in manholes are grouted.

00445.72 Pipe Testing(c)(6) Air Testing – DELETE AND REPLACE section with the following:

Record the time in minutes and seconds that is required for the internal air pressure to drop 0.5 psig.

Follow the chart below:

Minimum Specified Time Required for a 0.5 psig Pressure Drop for Size and Length of Pipe Indicated for Q=0.0015											
Pipe Dia. (in.)	Min. Time (min:sec)	Length for min. time (ft.)	Time for longer length (sec.)	Specification Time (min:sec) for Length L Shown Below in Ft.							
				100	150	200	250	300	350	400	450
4	1:53	597	0.190L	1:53	1:53	1:53	1:53	1:53	1:53	1:53	1:53
6	2:50	398	0.427L	2:50	2:50	2:50	2:50	2:50	2:50	2:51	3:12
8	3:47	298	0.760L	3:47	3:47	3:47	3:47	3:48	4:26	5:04	5:42
10	4:43	239	1.187L	4:43	4:43	4:43	4:57	5:56	6:55	7:54	8:54
12	5:40	199	1.709L	5:40	5:40	5:42	7:08	8:33	9:58	11:24	12:50
15	7:05	159	2.671L	7:05	7:05	8:54	11:08	13:21	15:35	17:48	20:02
18	8:30	133	3.846L	8:30	9:37	12:49	16:01	19:14	22:26	25:38	28:51
21	9:55	114	5.235L	9:55	13:05	17:27	21:49	26:11	30:32	34:54	39:16
24	11:20	99	6.837L	11:23	17:57	22:48	28:30	34:11	39:53	45:35	51:17
27	12:45	88	8.653L	14:25	21:38	28:51	36:04	43:16	50:30	57:42	46:54
30	14:10	80	10.683L	17:48	26:43	35:37	44:31	53:25	62:19	71:13	80:08
33	15:35	72	12.926L	21:33	32:19	43:46	53:52	64:38	75:24	86:10	96:57
36	17:00	66	15.384L	25:39	38:28	51:17	64:06	76:55	89:44	120:34	115:23

Table taken from UNI-B-6-90

00445.72(e) Pressure Sewer and Force Mains - ADD the following:

Pressure and force mains shall be tested by hydrostatic methods. The test pressure shall be two times that of the system pressure, or a minimum of 50 psi, The test shall be conducted for 2 hours minimum. Allowable loss shall be calculated using section 01140.51(a)(5). The test pressure shall not exceed the manufacturer's maximum operating pressure recommendation.

00445.74 Video Inspection of Sanitary and Storm Sewers – DELETE and REPLACE section with the following:

After laying and joining sanitary and storm sewer pipe installations from 6 inches to 72 inches in diameter, including backfill and compaction of trenches, but before any finish surfacing or final paving, the Contractor shall coordinate with the City for the City to conduct a video inspection of all sanitary sewer pipes and storm sewer pipes.

Findings of the video inspection shall be recorded, provided to the Contractor, and the Contractor shall be required to correct all deficiencies at no expense to the City. Upon correction of deficiencies revealed by video inspection, the Contractor shall notify the City Engineer and a follow-up video inspection of the corrected areas will be done by the City. Costs for any follow-up video inspections will be borne by the Contractor.

Warrantee Inspection:

The City shall provide video inspection of all lines prior to completion of the one-year warranty and final acceptance of the work. This will be done at no cost to the Contractor.

Findings of the video inspection shall be recorded, provided to the Contractor, and the Contractor shall be required to correct all deficiencies at no expense to the City. Upon correction of deficiencies revealed by video inspection, the Contractor shall notify the City Engineer and a follow-up video inspection of the corrected areas will be done by the City. Costs for any follow-up video inspections will be borne by the Contractor.

If at any time during the one-year warranty period examination of the sewer line discloses a deficiency, that deficiency shall be corrected by the Contractor at no expense to the City.

Measurement

00445.80 Measurement – ADD the following after ("**(k) Installation Under Railroad** – No measurement …").

(l) Sewer Service Line Pipe – Measurement for service line pipe shall be made on a linear foot basis for the size and type of pipe **shown**. Measurement shall be made along the centerline of the service pipe from the main line fitting to the cap or termination of the service line.

No final payment for service line pipe shall be made until the section of sewer into which the services are connected has successfully passed the applicable internal pressure test.

(m) Sewer Taps – Measurement for sewer taps shall be made on a per each basis for the type, kind, and size specified, and shall constitute full compensation for constructing the sewer tap complete and in place.

Payment

00445.91 Payment – ADD pay item as follows:

(n) Sewer Taps …… Each

Section 00470 – Manholes, Catch Basins, and Inlets

Comply with Section 00470, Manholes, Catch Basins, and Inlets, of the Standard Specifications supplement and/or modified as follows:

ADD the following subsection:

00470.44 HDPE Manhole Construction – The bottom thickness of the manholes shall be determined in accordance with ASTM F 1759. Calculations must be provided to justify the thickness of the bottom.

The inlets and outlets shall be extrusion welded on the inside and outside of the structure using good welding practice.

All manhole connections larger than 4” nominal OD pipe shall be butt-fusion welded, electro-fusion welded, or flanged connections. For 4” OD pipe and smaller threaded transition fittings can also be used as well as the acceptable connections listed.

HDPE manholes shall be stored on clean, level, and dry ground to prevent undue scratching or gouging of the pipe. The handling of HDPE manholes shall be done in such a manner that there is no damage.

Trench Construction – The trench and trench bottom shall be constructed in accordance with Section 00405, Trench Excavation, Bedding, and Backfill.

Backfilling shall be done to conform to the ASTM F 1759, Section 4.2, “Design Assumptions”. This Specification indicates that backfill shall extend at least 3.5 feet beyond the edge of the manhole for the full height of the manhole and extend laterally to undisturbed soils. Compaction shall be to 90% proctor density.

H-20 Highway Loads – Reinforced concrete pads spanning the HDPE manhole shall be provided when HDPE manholes are used in traffic areas. A traffic rated frame and cover will be required.

Manholes shall be factory tested with water or with air. The hydrostatic test shall be conducted by filling the structure with water and checking for leaks. Minimum test duration will be one hour. If air is used, 2 to 5 psi shall be used for 30 minutes. Data showing the structure to be leak-free will be supplied. The owner or his representative may request to observe the test.

00470.45 Steps and Ladders – DELETE and REPLACE section:

Steps and ladders are prohibited in manholes.

ADD the following subsection:

00470.48 Drywell Facility Construction – The concrete cap required under roadway areas by the Standard Drywell Drawing need not be formed. It may be poured directly on the moisture barrier. In earth or granular material, the outside two feet (2') of the concrete cap shall be poured over undisturbed earth. In rock excavation, the cap may be poured directly to the rock wall, provided that the rock wall is stable.
The fabric liner specified for the inside of the drywell barrel shall have a smooth finish to promote cleaning by washing down. Felted materials are not acceptable. Fabric liner shall have sufficient tensile strength to be hung without undue sagging, and to resist tearing. It shall be resistant to raveling, and shall be anchored 18 inches back underneath the cone and at each dry well joint for the entire depth of the drywell.

Full-flow vinyl screen (a0706) or equivalent, which is available locally, is an acceptable fabric liner.

The final elevation for each manhole shall conform exactly with the finished street. It is permissible to adjust the manhole frame to final grade after street paving provided the structure is low enough so as not to interfere with the street paving operation. Patching material shall be asphalt concrete with a maximum patch width of 6-inches.

Manhole cover shall have two holes and marked with the descriptive word Storm in cast 2-inch raised letters to describe the nature of the facility served by the manhole. A cut out at the rim should be provided for raising the lid. Don't Pollute shall be stamped into manhole cover.

00470.71(b) Vacuum Testing - ADD the following sentence:

Vacuum testing shall be completed prior to installation of protective coatings.

00470.72 Drywell Facility Testing – **ADD the following subsection:**

Prior to acceptance, all drywells shall pass a performance test under observation by a City representative. The test shall follow the following procedure:

(1) Install the drywell or drill hole as per the local jurisdiction's standard plans, specifications, and applicable construction guidelines.

(2) Inspect the drywell or drill hole and take photographs.

(3) Before beginning the test, field check the accuracy of the flowmeter by filling up a suitable container of known volume; for example, a calibrated 55-gallon barrel.

(4) Introduce clean water into the drywell or drill hole. Monitor flow using an in-line flowmeter.

(5) If possible, raise the water level in the structure until it reaches the top of the active barrel section. In the case of structures interconnected by pipes, raise the

water level to the invert elevation of the connecting pipe, or use an expandable pipe plug to seal the connecting pipe.
(6) Monitor and record the flow rate required to maintain the constant head level in the drywell or drill hole at appropriate intervals. In no case shall the interval exceed 10 minutes in length.

(7) Maintain the water level in the structure, by adjusting the flow rate, for a minimum of 2 hours or until a stabilized flow rate has been achieved, whichever is longer. Test time begins after the water level in the structure has reached the top of the active barrel section, or the invert elevation of any interconnecting pipes. The flow rate is considered stable when the water level in the structure is maintained and the incremental flow rate does not vary by more than 10 percent. *(In any case, the total volume and rate injected into the drywell or drill hole does not need to exceed the design storm volume.)*

(8) Upon completion of the constant head period, discontinue flow, monitor and record the water level in the drywell or drill hole at intervals no more than 5 minutes in length, for a 30-minute time period. This time may need to be extended depending on the soil performance.

Calculations shall follow the following:

1. Calculate the actual potential maximum infiltration rate q(*A*)

$$q(_A) = (Q/H) * H_D \text{ (cfs)}$$

Where: Q = stabilized flow rate observed near the end of the constant head portion of the test (cfs)
H = level of water within the drywell or drill hole (ft); and
Hd = maximum design drywell or drill hole head

2. Determine the design infiltration rates for a drywell or drill hole (*qD*). Apply the appropriate factor of safety (*FS*), see Table 1.

$$q(_D) = q_A / FS \text{ (CFS)}$$

Table 1 Required Safety Factors

GENERAL SOIL TYPE	SAFETY FACTOR
Clean Medium To Coarse Gravel Or Equivalent Such As Large Granular Volcanic Pumice	2.5 (Woven Geotextiles) 5 (Non-Woven Geotextiles)
Sandy Gravels Or Mixed Granular Pumice And Coarse Degraded Pumice	3.3
Medium To Coarse Sands Or Coarse Loose Sandy Pumice	3.3
Fine Sands And Finely Degraded Pumice	1.7

Silts, Glacial Till, Volcanic Ash, Consolidated Fine Pumice	1.25

Report shall include the following:

1. Report the condition of the drywell or drill hole. When applicable, include the following information:
   - General site, weather, and drywell or drill hole conditions prior to the test
   - Silt build-up
   - Water level in the drywell or drill hole
   - Connections to other structures
   - Overall depth of the drywell or drill hole from finished grate to bottom
   - Photographs taken of the drywell or drill hole during or after installation
   - Distance from finished grate to the invert elevation of any interconnecting pipes
   - The length of the active barrel section (the vertical length of the drywell or drill hole in contact with water during the test).

2. Report test data in a format that includes time of day, flowmeter readings, incremental flow rates, observed head levels and water depths in the structure, and total flow volumes.

3. Report the actual infiltration rates, design infiltration rates, and factors of safety.

4. Provide any conclusions or recommendations.

5. Provide name, title, and qualifications of person directing the test and providing the report.

Water trucks used for test water shall be provided with a site gauge or other safe approved method for reading the volume of the tank. Connections to the existing City of Bend water system shall be provided with an approved 12-inch air gap, or two times the size of fill pipe, whichever is greater.

00470.90 Payment – ADD pay items as follows:

(m) Drywell Facility ……..Each

Section 00480 – Drainage Curbs

Comply with Section 00480, Drainage Curbs, of the Standard Specifications supplement and/or modified as follows:

00480.00 Scope – DELETE the following words “or asphalt concrete material” from the sentence that begins (“This work consists . . .”).

00480.10 Materials – DELETE the following item from the tabular list:

Emulsified Asphalt …….. 00440

Section 00490 – Work on Existing Sewers and Structures

Comply with Section 00490, Work on Existing Sewers and Structures, of the Standard Specifications supplement and/or modified as follows:

00490.43 Abandoning Pipe In Place – DELETE and REPLACE with the following:

Abandoning pipe in place is not allowed. All abandoned utilities are required to be removed and disposed of properly, unless otherwise approved by the Engineer.

If pipes are permitted to remain in-place by the City Engineer, a tracer wire should be installed and terminated at both end points at ground surface to allow for utility locates. Brooks Boxes shall be installed at end points in a 2x2 concrete pad if outside hard surfaces.

Section 00495 – Trench Resurfacing

Comply with Section 00495, Trench Resurfacing, of the Standard Specifications supplement and/or modified as follows:

00495.40 General – ADD the following:

All restoration shall conform to section 3.8 the City of Bend's pavement restoration policy as stated in the Design Standards and 330.40 of these specifications. Asphalt shall be placed in lifts no greater than 2" or as approved by the City.

City of Bend Special Provisions to the
Oregon Standard Specifications for Construction

TABLE OF CONTENTS

PART 00600 – BASES

Section 00640 – Aggregate Base and Shoulders

Section 00641 – Aggregate Subbase, Base, and Shoulders

PART 00600 – BASES

Section 00640 – Aggregate Base and Shoulders

Comply with Section 00640 of the Standard Specifications modified as follows:

00640.41 Hauling and Placing – ADD the following paragraph after the sentence that begins (“Transport the aggregate . . .”):

Prior to the placement of base rock, all structures (e.g. manholes, utilities, catch basins) shall be completely installed, grouted, seated, backfilled, set to finish grade, and all compaction tests are supplied to the City Engineer.

Section 00641 – Aggregate Subbase, Base, and Shoulders

Comply with Section 00641 of the Standard Specifications modified as follows:

00641.10 Materials – ADD the following paragraph after section number and title:

– The base material and material source is subject to the approval of the Engineer. If the Contractor is not in agreement with the Engineer, he must prove the material is acceptable by providing test reports on the material, in accordance with standard sampling and testing requirements, by an ODOT-approved independent party. All costs associated with such testing shall be borne by the Contractor.

00641.12 Limits of Mixture – DELETE the paragraph that begins ("Provide a Mixture . . .") and REPLACE with the following:

Provide a mixture of aggregate and water having a uniform moisture content sufficient to obtain the required compaction. Water may be introduced in a mixing plant or on the grade. Proportions will be in percentages by weight and will be known as the Mix Design. Determine the proportion of aggregate and water according to the MFTP. The amount of water for the Mix Design will be based on the dry weight of the aggregate.

When introducing water at the mixing plant, furnish the mixture with a tolerance of ± 2% of the optimum water content at the time of mixing. If approved, excess percentage of water may be allowed. The Agency will treat excess percentage of water according to 00641.80(d).

00641.41 Mixing, Hauling, and Placing

ADD the following after the first paragraph ending ("...according to 00641.12").

Prior to the placement of base rock, all structures (e.g. manholes, utilities, catch basins) shall be completely installed, backfilled, set to finish grade, and all compaction tests are supplied to the City Engineer.

City of Bend Special Provisions to the Oregon Standard Specifications for Construction

TABLE OF CONTENTS

PART 00700 – WEARING SURFACES

Section 00705 – Emulsified Asphalt Prime Coat and Emulsified Asphalt Fog Coat

Section 00706 – Emulsified Asphalt Slurry Seal Surfacing

Section 00715 – Multiple Application Emulsified Asphalt Surface Treatment

Section 00730 – Emulsified Asphalt Tack Coat

Section 00744 – Minor Hot Mixed Asphalt Concrete (MHMAC) Pavement

Section 00745 – Hot Mixed Asphalt Concrete (HMAC)

Section 00746 – Crack Sealing Flexible Pavements

Section 00759 – Miscellaneous Portland Cement Concrete Structures

PART 00700 – WEARING SURFACES

Comply with Section 00705 of the Standard Specifications modified as follows:

00705.11(c) Fog Coat – REPLACE the sentence that begins ("Provide CSS-1h, or HFRS-P1…") with the following paragraph:

Provide CRS-2P or HFRS-P1 emulsified asphalt for the fog coat.

ADD the following subsection:

00705.50 – Quality Control

Upon completion of paving, with a City inspector present, Contractor shall conduct a water test to ensure proper drainage grades along curblines. Contractor shall discharge a minimum of 500 gallons of water on to paved area. Puddles resulting to a depth of ¼ Inch or any water flowing on to private property shall be repaired.

Section 00706 – Emulsified Asphalt Slurry Seal Surfacing

Comply with Section 00706 of the Standard Specifications modified as follows:

Replace this subsection, except the subsection number and title, with the following:

00706.23 Rollers – DELETE in its entirety

00706.48 Rolling – DELETE in its entirety

Section 00715 – Multiple Application Emulsified Asphalt Surface Treatment

Comply with to Section 00715 of the Standard Specifications modified as follows:

00715.40 Season and Weather Limitations – REPLACE “July 1” with “June 1” in the sentence that begins ("The placing of multiple…").

Section 00730 – Emulsified Asphalt Tack Coat

Comply with Section 00730 of the Standard Specifications modified as follows:

00730.90 Payment – DELETE in its entirety and REPLACE with the following:

No separate or additional payment will be made for emulsified asphalt tack coat. Approximately _____ tons of emulsified asphalt in tack coat will be required on this Project.

Section 00744 – Minor Hot Mixed Asphalt Concrete (MHMAC) Pavement

Comply with Section 00744 of the Standard Specifications modified as follows:

00744.11(a) Asphalt Cement – REPLACE the sentence that begins ("Use PG 64-22 or . . .") with the following sentence:

Use PG 64-28 for standard applications (level I-III) or PG 70-28 asphalt for special applications including but not limited to round-a-bouts or high volume intersections or the City may require a full pavement design to be submitted if the contractor or engineer desires to deviate from these standards.

Recycled Asphalt Pavement (RAP) may be used up to 20%. A lower grade asphalt cement may not be used to replace PG 64-28 or PG 70-28.

00744.16 MHMAC Acceptance – DELETE in its entirety and REPLACE with the following:

A CAT-1 shall perform a minimum of one asphalt content, gradation, mix moisture, and Maximum Specific Gravity (AASHTO T 209) test per day and provide results to the Engineer by the middle of the following work shift. The Contractor shall also provide split samples to the Engineer when requested. Testing may be waived upon written notice and accepted visually by the Engineer according to Section 4(B) of the MFTP.

When three or more tests are performed on a project, a price adjustment will be calculated according to 00744.95.

ADD the following subsection:

00744.17 Small Quantity Acceptance

When less than three test results are obtained on a project and testing has not been waived by the Engineer, the MHMAC will be accepted according to the following:

(a.) Within Specification Limits If all sublot sample test results are within specification limits for all constituents (including compaction) the material will be accepted and the full bid price will be paid for the material represented by that test.

(b.) Outside Specification Limits - If a sublot sample test result for any constituent is outside the specification limit the Engineer will have the backup sample tested.

(1) Backup Within Specifications - If the backup sample test results for all constituents are within specification, the material will be accepted and the full bid price will be paid for the material represented by that test.

(2) Backup Out of Specifications - If the backup sample test results are out of specification, the Contractor may choose to accept the price adjustment calculated according to 00744.95 or may choose to sample the in-place material for further testing. The price adjustments will be computed using all original test results as well as all backup test results. (If there are less than three tests, average the two tests you have and use the average as the third test result). In no case will the composite pay factor (CPF) be greater than 1.0.

(3) In-Place Samples - If the in-place material is sampled, the Engineer will select and sample from three random locations from the area represented by the lot in question. Those samples will be tested and if found to be within specification the material will be accepted and paid for at the full bid price. If the material proves to be outside of the specification limits, the material will be accepted and paid for at an adjusted price according to 00744.95. In no case will the CPF be above 1.0.

00744.49 Compaction – DELETE and REPLACE with the following:

Immediately after the MHMAC has been spread, struck off, and surface irregularities and other defects remedied, roll it uniformly with rollers meeting the requirements of 00744.24 until compacted to a minimum of 91% of MAMD. Perform finish rolling and continue until all roller marks are eliminated. Determine the density of each sublot by averaging five QC tests performed at random locations by a CDT with the nuclear gauge operated in the backscatter mode according to WAQTC TM 8. Calculate MAMD according to ODOT TM 305. When less than three sublot test results are obtained on a project, the MHMAC will be accepted according to 00744.17. Perform a minimum of one sublot density test per day. The Engineer may waive compaction testing upon written notice.

00744.80 Measurement – DELETE the paragraph that begins ("No separate measurement will be made…").

00744.90 Payment – DELETE the paragraph that begins ("No separate or additional payment will be made for the asphalt tack…").

ADD the following subsection:

00744.95 MHMAC Price Adjustments

The Composite Pay Factor (CPF), calculated according to 00165.40 will be applied to the Contract unit price for the pay items of 00744.90 and to the applicable lot quantities. The CPF will be made available to the Contractor within 24 hours of receipt of the required quality control test results. If less than three samples are tested, the CPF will be computed as outlined in 00744.17. The maximum CPF for any case will be 1.0.

Use the following table to determine price adjustments in the CPF for constituents of MHMAC.

Gradation Constituents	Dense Graded MHMAC Type Weighting Factor (f)		
All Aggregate Passing	**3/4"**	**1/2"**	**3/8"**
1"	1		
3/4"	1	1	
1/2"	1	1	1
3/8"	–	–	1
No. 4	5	5	5
No. 8	5	6	6
No. 30	3	3	3
No. 200	10	10	10
Other Constituents			
Asphalt Content	26	26	26
Moisture Content	8	8	8
Compaction	40	40	40

Those MHMAC constituents statistically evaluated will be eligible for a maximum PF of 1.00 (see 00165.50(b-1)), unless otherwise specified.

If these specifications do not require measurement of a constituent, its individual PF will be considered 1.00 in calculating the CPF according to 00165.40.

A price adjustment will be determined by the following formula:

(CPF - 1) x MHMAC Unit Price x (LQ) = ____

Where: LQ is the quantity of mixture in the lot

Section 00745 – Hot Mixed Asphalt Concrete (HMAC)

Comply with Section 00745 of the Standard Specifications modified as follows:

00745.14 Tolerances and Limits – REPLACE the tolerance list with the following:

Gradation	Dense-Graded HMAC Type				Open-Graded HMAC TYPE		
Constitue	1"	3/4"	1/2"	3/8"	3/4"	1/2"	ATPB
1 1/2"	JMF						
1"	90 - 100%	JMF			99 - 100%		99 - 100%
3/4"	JMF ± 5%	90 - 100%	JMF		85 - 96%	99 - 100%	85 - 95%
1/2"	JMF ± 5%	JMF ± 5%	90 - 100%	JMF	55 - 71%	90 - 98%	35 - 68%
3/8"**	–	–	–	90 - 100%	–	–	–
No. 4	JMF ± 5%	JMF ± 5%	JMF ± 5%	JMF ± 5%	JMF ± 5%	JMF ± 5%	JMF ± 5%
No. 8	JMF ± 4%	JMF ± 4%	JMF ± 4%	JMF ± 4%	JMF ± 4%	JMF ± 4%	JMF ± 4%
No. 16**	–	–	–	–	–	–	–
No. 30	JMF ± 4%	JMF ± 4%	JMF ± 4%	JMF ± 4%	JMF ± 4%	JMF ± 4%	–
No. 50**	–	–	–	–	–	–	–
No. 100**	–	–	–	–	–	–	–
No. 200	JMF ± 2.0%	JMF ± 2.0%	JMF ± 2.0%	JMF ± 2.0%	JMF ± 2.0%	JMF ± 2.0%	JMF ± 2.0%

* Maximum not to exceed 100%
** Report percent passing sieve when no tolerance is listed

00745.16(a)(1) Personnel Requirements – ADD the following to the end of the bullet list:

- Providing at least one CAT-1 full-time at each plant site when producing mixture for the Project.

00745.16(a)(4) Testing Frequency – DELETE the paragraph that begins (“After the Mix Design...").

00745.16(a) Quality Control – ADD the following subsection:

(5) Plant Calibration – Calibrate all meters and belt scales at the HMAC mixing plant according to ODOT TM 322 prior to beginning production.

00745.16(b)(1) MDV QUALITY CONTROL – DELETE in its entirety and REPLACE the following subsection:

a. General - Perform MDV testing on projects with Level 2, Level 3, or Level 4 dense graded HMAC. Perform MDV tests on every sublot and as required at start up according to 00745.16(b-1-c) and the MFTP. Perform gradation and asphalt

content testing with each MDV test. Calculate the following values for each MDV test.

- Air Voids
- Voids in Mineral Aggregate (VMA)
- Voids Filled with Asphalt (VFA)
- P No. 200/Effective AC (Pbe) Ratio

The running averages of four MDV results shall be within the limits given below:

	Average of	**Limit**
Air Voids	4 samples	JMF Target ± 1.0%
VMA	4 samples	11.5 - 17.0 (1" Mix) 12.5 - 17.0 (3/4" Mix) 13.5 - 17.0 (1/2" Mix) 14.5 - 17.0 (3/8" Mix)
VFA	4 samples	65 - 75 (3/4" and 1/2" Mix in Level 2, 3 and 4) 65 - 78 (3/8" Mix in Level 2, 3 and 4) 70 - 80 (1/2" and 3/8" Mix in Level 1)
Passing No. 200/Pbe	4 samples	0.8 - 1.6

The CDT shall provide the results from the initial control strip to the CAT II for evaluation and comparison with the MDV results. If the MDV and density test results are contradictory, initiate an investigation. The CAT II shall recommend a plan to the Engineer for resolving the discrepancy based on the results of the investigation.

Take corrective action when required by the MDV start-up process of 00745.16(b-1-c). After the requirements of 00745.16(b-1-c) have been met, take corrective action if the MDV test results show that two consecutive running average of four samples are outside the above limits for air voids, VMA, VFA, or P No. 200/Pbe ratio. Document the corrective action and notify the Engineer. If test results continue to be outside the tolerance, stop production and make adjustments. Restart production only after the Engineer has approved the proposed adjustments. If the MDV test results are outside tolerance, but the mixture meets the current requirements for gradation and asphalt content, an adjustment to the JMF targets is required. Do not start a new lot as a result of the adjustment.

A request for an adjustment to the JMF targets may be made to the Engineer by the Contractor's CAT-II. The requested change will be reviewed and documented by the Engineer. If acceptable, a revised JMF will be allowed. Clearly document the sublot test for which the adjusted targets are in effect. Adjustments for gradation

shall not exceed the tolerances specified for the original JMF limits. Adjustments for AC content shall be within 0.5% of the original JMF. The JMF asphalt content may only be reduced if the production VMA meets or exceeds the above requirements. Adjustments for RAP content shall be within 5% of the original JMF, but shall not exceed the requirements of 00745.03. Regardless of these tolerances, the adjusted JMF shall be within the mixture specification control points of 00745.12. If a redesign of the mixture becomes necessary, submit a new JMF according to the requirements of these specifications.

Perform a Tensile Strength Ratio (TSR) test (AASHTO T 283) on a sample obtained during the first two days of production after QC test results verify that HMAC constituents with a weighting factor greater than one according to 00745.95 are in tolerance. Provide test results to the Engineer within four working days of obtaining the sample. Stop production and make adjustments if the TSR is less than 70. Restart production only after the Engineer has approved the proposed adjustments.

b. Laboratory Compactor Selection - Use a Gyratory compactor for MDV when a Gyratory compactor is used to develop the JMF. For all other cases, use a Gyratory compactor or Marshall compactor, as selected by the Contractor.

c. MDV Requirements at Start-Up - Perform MDV testing at the start-up of the JMF production according to the following process:

1. Obtain a sample during the first 100 tons of production and immediately perform MDV testing.

2. If air voids and VMA are within tolerance, then continue remaining MDV testing at the established random QC sublot interval. If not, then go to step "3".

3. If air voids and/or VMA are out of tolerance according to 00745.16(b-1-a), then make adjustments and immediately obtain another sample and perform MDV testing. Go to step "4".

4. If air voids and VMA from the MDV testing in step "3" are within tolerance, then continue remaining MDV testing at the established random QC sublot interval. If not, go to step "5".

5. If air voids from step "3" are more than $\pm$ 1.5% from the target, then stop production immediately and make adjustments. If they are not, then go to step "6". Obtain approval of the Engineer before restarting production. Begin MDV testing again at step "1".

6. If air voids from step "3" are out of tolerance and 1.5% or less from the target, or the VMA from step "3" is out of tolerance, then make adjustments and immediately obtain another sample and perform MDV testing. Go to step "4".

The initial MDV sample shall be used as the first random QC sublot test. Subsequent MDV samples required due to failure of start-up criteria will be used for a sublot QC test if the sample is taken within 100 tons of the scheduled random QC sample location. If not, the MDV testing shall be performed separate from, and not included in, the random QC testing program. Any required MDV testing will be completed at the Contractor's expense.

00745.24(a) Steel-Wheeled Rollers – DELETE in its entirety and REPLACE with the following:

Provide steel-wheeled rollers with a minimum gross static weight as follows:

Level 1	Level 2	Level 3	Level 4
Breakdown and Intermediate	8 ton	10 ton	12 ton
Finish	6 ton	8 ton	10 ton

00745.40 Season and Temperature Limitations – REPLACE "50 °F" with 40 °F" in the table, for Surface Temperature of Dense Graded Mixes 2 inches to 2 1/2 inches.

00745.42 Preparation of Underlying Surfaces – ADD All restoration shall conform to section 3.8 the City of Bend's pavement restoration policy as stated in the Design Standards and 330.40 of these specifications.

00745.49 (e) Other areas – REPLACE the sentence ("compaction to a specific density will not be required on temporary surfacing (see 00745.50), guardrails flares, mailbox turnouts, road approaches, pavement repair and areas of…)with the following:

…less than 150 square feet in area. Asphalt shall be placed in lifts no greater than 2" or as directed by the City.

00745.61(a)(2) Wearing Course – REPLACE the sentence which begins ("They shall be located…") with the following:

They shall be located at either the centerline, skip lines, or fog lines unless approved by the Engineer.

All restoration shall conform to section 3.8 the City of Bend's pavement restoration policy as stated in the Design Standards and 330.40 of these specifications. Asphalt shall be placed in lifts no greater than 2" or as directed by the City.

00745.80 Measurement – ADD the following sentence to the end of the paragraph that begins ("When RAP materials are used..."):

For non-RAP mixtures, measurement of the total asphalt quantity will be based on quality control tests averaged to the nearest 0.01% when the Engineer determines that payment by invoice and tank sticking is impractical.

Section 00746 – Crack Sealing Flexible Pavements

Comply with Section 00746 of the Standard Specifications modified as follows:

00746.10 Sealants – REPLACE the paragraph that begins ("Furnish hot-poured sealants…") with the following:

Furnish hot poured sealants of the type intended for use in sealing cracks in asphalt concrete pavement that meet the requirements of 02440.30.

Sealants shall meet ASTM D 5329 standard test methods for sealants and fillers. All sealants shall be hot-applied, for joints and cracks in asphaltic and Portland cement concrete. Sand sealing is on an approved basis at the City's discretion.

Section 00749 – Miscellaneous Asphalt Concrete Structures

Comply with Section 00749 of the Standard Specifications modified as follows:

00749.45 - Compacting Asphalt Concrete Delete the end of the sentence that starts with "(Along curbs…~~hot hand tampers, or hand rollers~~.") REPLACE with the following: …with a minimum of four coverages.

SECTION 00759 - MISCELLANEOUS PORTLAND CEMENT CONCRETE STRUCTURES

Comply with Section 00759 of the Standard Specifications modified as follows:

Description

00759.00 Scope – DELETE in its entirety and REPLACE with the following:

This work consists of furnishing, placing and finishing commercial grade concrete curbs, islands, traffic separators, driveways, walks, monolithic curb and sidewalks, concrete driveway connections, ADA curb ramps, miscellaneous surfaces, and stairs with metal handrail in close conformity to the lines, grades and dimensions shown or established. The items in this Section will be collectively referred to as "structures".

This work also consists of removing existing concrete sidewalks and curbs and furnishing and placing sidewalk ramp treatments.

00759.12 Sidewalk Ramp Treatment – DELETE in its entirety and REPLACE with the following:
Where truncated dome detectable warning surfaces are shown, furnish and place the following materials:

ADA Cast-In-Place (Wetset) Detectable Warning Panels with mechanical anchors by Armorcast Products Company (www.armorcastprod.com or (818) 982-3600) or approved equal. Furnish color shown in the plans or approved by the engineer.

Where truncated dome detectable warning surfaces are shown installed on a radius, furnish and place the following materials:

Vanguard Liquid Applied Truncated Domes comprised of resins, reactive monomers, pigments, glass beads, and fillers by Vanguard ADA Systems of America (http://www.vanguardonline.com or (360) 668-5700) or approved equal. Furnish color shown in the plans or approved by the engineer.

ADD the following subsection:

00759.22 – Electronic Level – Furnish a calibrated 48-inch electronic “smart-level” to use during and after construction to verify that all grades and slope meet PROWAG criteria.

00759.41 Earthwork – ADD the following to this sub-section:

Remove existing structures and pavement as shown and as necessary to construct ADA curb ramps. Saw cut pavement to clean straight lines with vertical faces extending completely through pavement section.

Where shown saw cut and remove existing curb. Saw cut curb to clean straight lines with vertical face extending completely through curb section. Make saw cut perpendicular to face of curb. If proposed saw cut is located within two feet from existing expansion or control joint, remove and replace curb to existing joint beyond dimension shown on plans. Saw cut and remove existing sidewalk to dimensions shown on plans. Saw cut concrete sidewalks to clean straight lines with vertical face extending completely through sidewalk section. Make saw cuts perpendicular to sidewalk alignment. When planned saw cut is located within 2 feet of expansion or contraction joint, remove sidewalk to expansion or control joint beyond dimension shown on plans.

00759.46 Concrete – ADD the following to the end of this sub-section:

Before scheduling delivery of concrete, document that forms are constructed to dimensions and grades shown on plans and that grades and dimensions meet PROWAG criteria. Use a 48-inch electronic Smart Level to verify that formwork matches plan and PROWAG grades. Correct all discrepancies before scheduling delivery of concrete to ensure that finished concrete work meets requirements of PROWAG.

Use City of Bend ADA Ramp evaluation form to document that forms comply with PROWAG criteria. Submit completed forms to City inspector before scheduling concrete delivery. Evaluation form can be downloaded from the following website:

(http://www.ci.Bend.or.us/accessibility/curb_ramp_assessment_forms.html)

00759.50 (a) General ADD the following to the end of this sub-section:

Construct ADA curb ramps, sidewalks, and other pedestrian facilities according to all requirements of PROWAG. Verify compliance by using a 48-inch smart level to check grades and slopes.

Curb backfill shall be of good quality topsoil per Section 1040.14. Topsoil shall be fertile, loamy, natural surface soil, well graded and free from substances toxic to plant growth, noxious weeds, roots, refuse, sticks and rocks greater than 3-inch major diameter. Pumice or soil that contains excessive pumice shall not be permitted.

00759.50(c) Driveways, Walks, and Surfacing ADD the following to the end of this sub-section:

Install truncated dome detectable warning surfaces completely across curb ramp opening and perpendicular to the running slope of the ramp.

Before installing truncated domes, review manufacturer's instructions and Plans. Refer all discrepancies to City Inspector. Check supplied warning panel for attached metal concrete anchors and washers. If anchors or washer are missing or damaged, replace with new anchor or washer supplied by the manufacturer before installing. Supply replacement hardware at the Contractor's expense.

Maintain a slump range of 4- to 7-inches for the concrete to permit solid placement of cast in place truncated dome tiles. Do not use an overly wet mix, which will cause tile to float. Pour and finish concrete to a true and smooth surface to the required dimensions and slope before placing panel.

Immediately after finishing concrete, use electronic "smart level" to check that the required slope has been achieved. Place panel true and perpendicular to the running slope of the ramp as shown. Tamp or vibrate panels into the fresh concrete to ensure that the field level of the tile is flush with adjacent concrete surface on all four sides of the tile. Do not attempt to level the tile by stepping on tile. This may cause uneven setting, which can result in air voids under the tile surface. Set surface of tile field (base of truncated dome) flush with adjacent surfaces to permit proper water drainage and to eliminate tripping hazards between adjacent surfaces. Use 25 to 50 pound weights to hold down panels after placement in concrete.

Leave factory installed protective cover on panels during entire installation process to prevent concrete from splashing onto the finished surface of the tile. When preparing to set tile, do not remove concrete in the area that will receive tile. In order to ensure that no air voids form under tile, tile must be set on uniform concrete surface.

While concrete is workable, use steel edging trowel with a minimum of 1/8" radius to edge the finished concrete around the panel. Then use a steel trowel to finish the concrete around the tile's perimeter so it is flush with field level of the tile.

After installing tile, review installation according to dimensions and grades shown on the plans and if necessary, adjust tile before the concrete sets.

Immediately after concrete has cured, remove protective plastic wrap from the tile surface by cutting the plastic wrap with a sharp knife held tight to the concrete/tile interface. If concrete bled under the plastic, use a soft brass wire brush to clean the residue without damage to the tile surface.

00759.50 Surface Finishing – ADD the following subsection:

(d) Service Stamps – All sewer and water locations shall be marked on the top of the curb with the appropriate brand: “S” for sewer and “W” for water. Brand shall be a minimum of 4 inches in height and ¼ inch in depth.

(e) Cutting Truncated Domes – Furnish truncated dome panels in standard sizes supplied by the manufacturer. Where cutting panels is necessary to provide custom sizes shown, follow manufacturer’s recommendations and use the following procedure.

Do not install panels smaller than 2-feet by 2-feet. Provide standard panel sizes and plan cuts to minimize panel waste.

Cut tiles to custom sizes using a continuous rim diamond blade in a circular saw or mini-grinder. Use a straightedge when cutting straight lines.

When placing cut panels, butt clean uncut edges against each other. Orient cut edges to the outsides of the ramp.

Furnish and place anchors for cut panels according to the manufacturer’s recommendations.

(f) Liquid Applied Truncated Domes – Install liquid applied truncated dome detectable warning surfaces according to manufacturer’s directions and recommendations and as shown.

Liquid applied truncated dome detectable warnings must be installed by a certified Vanguard installer. Contact Vanguard of America for a list of installers.

Install liquid applied truncated domes when surface temperature is between 35 degrees Fahrenheit and 88 degrees Fahrenheit.

Install on clean, dry, and fully cured surface free from surface curing compounds, sealers, or surface coloring. If installed on colored concrete, coloring must be integral and not surface applied. Remove all surface curing compounds or sealers by grinding on all concrete that is less than 6-months old or if deemed necessary by certified Vanguard installer.

Install on broom finished surface for maximum adhesion.

Install on concrete with minimum compressive strength 2500 PSI. Allow concrete to cure for minimum of 10 days prior to the installation. The Vanguard installer has full discretion to determine whether it may (or should) be installed earlier or later than above defined timelines to insure proper bonding.

ADD the following subsection:

00759.60 Metal Handrail – Fabricate and assemble free standing and bolted down metal handrail as shown.

(a) Welding – Welding, welder qualifications, prequalification of weld details and inspection of welds shall conform to AWS D1.1. Submit all welding procedure specifications to the Engineer for approval.

(b) Punched Holes - Use a die with a diameter not exceeding the diameter of the punch by more than 1/16 inch. Ream any holes that are required to be enlarged to admit the anchor bolts. Make clean cut holes without torn or ragged edges.

(c) Accuracy of Punched Holes - Locate all holes punched full size so accurately that when multiple anchor plates are stacked with the edges even, a cylindrical pin 1/8 inch smaller in diameter than the nominal size of the punched hole may be entered perpendicular to the face of the plate without drifting in each of the connecting holes in the same plane. Non-conforming pieces will be rejected.

00759.90 Payment – ADD the following pay items:

Pay Item	Unit of Measurement
(k) Concrete Driveway Connections	Square Foot
(l) ADA Curb Ramps	Square Foot
(m) Truncated Dome Detectible Warnings	Square Foot
(n) Liquid Applied Truncated Domes	Square Foot
(o) Metal handrail	Foot

DELETE the paragraph that reads "Items (e) and (f) include sidewalk ramps."

ADD the following after the sentence that begins (“Item (h) includes . . .”)

Item (l) includes saw cutting and removing existing concrete walks, curbs, ramps, or pavement according to Section 00330 and replacing them with new sidewalk ramps and curbs.

City of Bend Special Provisions to the
Oregon Standard Specifications for Construction

TABLE OF CONTENTS

PART 00800 – PERMANENT TRAFFIC SAFETY AND GUIDANCE DEVICES

Section 00810 - Metal Guardrail

Section 00812 - Adjusting and Repairing Guardrail

Section 00815 - Bollards

Section 00820 - Concrete Barrier

Section 00830 - Impact Attenuators

Section 00840 - Delineators and Milepost Marker Posts

Section 00850 - Common Provisions For Pavement Markings

Section 00851 - Pavement Marking Removal

Section 00857 - Rumble Strips

Section 00860 - Longitudinal Pavement Markings - Paint

Section 00867 - Transverse Pavement Markings - Legends and Bars

SECTION 00810 - METAL GUARDRAIL

[NOTE: Except for extra length guardrail posts, do not separately pay for new guardrail posts under this Section. New posts are already included in the appropriate guardrail pay item. Replacing existing guardrail posts are now covered in Section 00812.]

Comply with Section 00810 of the Standard Specifications modified as follows:

00810.40 Timing and Coordination of Work - ADD the following paragraph at the end of this subsection:

Contact the Engineer and the appropriate utilities 72 hours before beginning hand digging guardrail post holes.

00810.90 Payment - ADD the following pay item:

(j) Extra for Hand Dug Guardrail Post Holes..... Each

In item (j) the extra costs for hand dug holes are costs that are not covered and included in the unit price for one or more of the other listed pay items.

Payment for item (j) performed beyond the quantity shown in the Contract Schedule of Items will be made at the Contract unit price if the Engineer determines that the Contract unit price does not exceed the value of the work as determined on the basis of rates given in Section 00197. If the Engineer determines that the Contract unit price exceeds the value of the work, payment for the additional work will be made according to Section 00196.

SECTION 00812 - ADJUSTING GUARDRAIL

REPLACE Section 00812 of the Standard Specifications in its entirety with the following:

SECTION 00812 - ADJUSTING AND REPAIRING GUARDRAIL

Description

00812.00 Scope - This work consists of adjusting and repairing existing guardrail as shown or directed.

Materials

00812.10 Materials - Furnish replacement metal beam rails, posts, blocks, and hardware meeting the requirements of 00810.10.

Construction

00812.40 General - Install all guardrail components during the same day they are removed. Repair minor damage to galvanizing according to ASTM A 780. Minimum zinc content for Method A2 is 94% on the dry film.

00812.41 Adjusting Guardrail - Adjust existing guardrail by one or both of the following methods:

(a) Posts Remain in Place:

Remove the existing metal beam rails and blocks in a manner that will not damage galvanizing.

If required, drill new bolt holes in posts.

Treat all existing and all new holes with a preservative from the QPL.

Reinstall the metal beam rails and blocks.

Perform all other required work as shown.

(b) Raise Posts - Remove and reinstall posts to the required height, or raise them to the required height and work grout or other materials under them in a manner satisfactory to the Engineer.

Adjust existing terminal ends by raising the soil tubes and ground struts to the required height and placing and compacting matching material under the ground struts.

00812.43 Repairing Guardrail - Repair existing guardrail by replacing metal beam rails, posts, blocks, and hardware. Install new metal beam rails, posts, blocks, and hardware according to 00810.42 and 00810.43.

Measurement

00812.80 Measurement - The quantities of work performed under this Section will be determined as follows:

- **Adjusting Guardrail** - Adjusted guardrail will be measured on the length basis, of existing guardrail adjusted. Measurement will be by one of the following methods:

  - **Count Method** - The number of standard sections will be counted and multiplied by 12 1/2 feet. For purposes of this subsection, a standard section is defined as 12 1/2 feet of complete guardrail, without regard to the number of existing posts or existing rail elements. Non-standard sections will be measured from center of post to center of post, to the nearest foot, and added to the total calculated length of the standard sections for each run.

  - **Length Method** - Measurement will be from center to center of terminal end posts, or as otherwise shown, along the line and grade of each run of each type to the nearest foot.

- **Repairing Guardrail** - Repaired guardrail metal beam rails, posts, and blocks will be measured on the unit basis. For purposes of this subsection, a metal beam rail is defined as 12 1/2 feet long.

Payment

00812.90 Payment - The accepted quantities of work performed under this Section will be paid for at the Contract unit price, per unit of measurement, for the following items:

Pay Item	**Unit of Measurement**
Adjusting Guardrail	Foot
Metal Beam Rails	Each
Guardrail Posts	Each
Guardrail Blocks	Each

Payment will be payment in full for furnishing and placing all materials, and for furnishing all equipment, labor, and incidentals necessary to complete the work as specified.

No separate or additional payment will be made for:

- Hardware
- Adjusting terminal ends
- Replacement metal beam rails, posts, and blocks that are damaged by Contractor equipment or operations.

SECTION 00815 - BOLLARDS

Comply with Section 00815 of the Standard Specifications modified as follows:

00815.10 Materials - REPLACE the reflective sheeting line with the following:

Retroreflective Sheeting (Type III and Type IV)...From QPL

SECTION 00820 - CONCRETE BARRIER

Comply with Section 00820 of the Standard Specifications modified as follows:

00820.12(a) New Barrier Used for Temporary Applications - In the bullet that begins "Are given two coats of…", REPLACE "02210.30(c)" with "02210.30".

00820.12(b) Barrier Used on Previous Projects - In the paragraph that begins "Apply two coats of…", REPLACE "02210.30(c)" with "02210.30".

SECTION 00830 - IMPACT ATTENUATORS

Comply with Section 00830 of the Standard Specifications modified as follows:

00830.40 General - ADD the following paragraph at the end of this subsection:

Install fixed object markers on the head of the impact attenuator.

SECTION 00840 - DELINEATORS AND MILEPOST MARKER POSTS

Comply with Section 00840 of the Standard Specifications modified as follows:

00840.10 Materials - REPLACE the "Reflective Sheeting for Delineators" line with the following line:

Delineator Reflective Sheeting (Type III and Type IV) ... From QPL

SECTION 00850 - COMMON PROVISIONS FOR PAVEMENT MARKINGS

(When this Section is used on a project and when it has a completion date of September 15 or later, contact the Scheduler to determine if a separate completion date for striping is required. If a separate completion date is required, include an interim completion date in 00180.50(h).)

Comply with Section 00850 of the Standard Specifications modified as follows:

00850.20(b) Equipment for Longitudinal Lines - REPLACE the paragraph that begins "Use equipment capable of…" with the following paragraph and bullets:

Provide equipment that can:

- Place two parallel lines simultaneously with 4 inch minimum to 12 inch maximum spacings between the two lines.
- Place the entire width of a line in one pass.

00850.46 Placement Tolerance - REPLACE the bullet that begins "Thickness of lines…" with the following bullet:

- **Thickness of flat, surface applied lines:** + 1/3 of the specified thickness, – 1/10 of the specified thickness

00850.47(b) Curing of Material - REPLACE the sentence that begins "Rate the line…" with the following sentence:

Rate the line, markings, and pavement marker adhesive at the time of installation to determine if the material has properly cured.

00850.47(c) Retroreflectivity - REPLACE the sentence that begins "Use a retroreflectometer…" with the following sentence:

Use a 30 meter geometry retroreflectometer to measure the retroreflectivity within 48 hours of curing, except for paint applications:

00850.70 Disposal of Waste - REPLACE this subsection with the following subsection:

00850.70 Disposal of Materials - Dispose of all materials according to 00290.20.

SECTION 00851 - PAVEMENT MARKING REMOVAL

Comply with Section 00851 of the Standard Specifications modified as follows:

00851.40 General - REPLACE the paragraph that begins "Remove non-durable pavement markings…" with the following paragraph:

Remove pavement markings by hydroblasting, steel shot blasting, or grinding so that the pavement surface is not damaged below a depth of 1/8 inch, creating a smooth, flat slot of uniform depth.

If a road is chip sealed, any pavement marking removal will require a slurry seal, or other approved method. If the pavement surface is damaged below a depth of 1/8 inch, the City may require additional pavement repair beyond slurry seal.

SECTION 00857 - RUMBLE STRIPS

Comply with Section 00857 of the Standard Specifications modified as follows:

00857.40 Construction - REPLACE this subsection, except for the subsection number and title, with the following:

Clean the pavement by sweeping to remove dust and other foreign matter. Dispose of all materials according to 00290.20.

00857.80 Measurement - In the paragraph that begins "The quantities of…", replace the sentence that begins "Measurement will be…" with the following sentence:

Measurement will be made along each continuous rumble strip run, regardless of location or width of strip.

SECTION 00860 - LONGITUDINAL PAVEMENT MARKINGS - PAINT

Comply with Section 00860 of the Standard Specifications modified as follows:

00860.45 Installation - In the bullet that begins "For yellow colored markings…", REPLACE the sentence that begins with "For yellow colored markings…" with the following two sentences:

For yellow colored markings that delineate two-way traffic, apply the second application in the opposite direction of the first application. For yellow colored markings on one-way roadways or adjacent to raised medians, apply the second application in the same direction of the first application.

SECTION 00867 - TRANSVERSE PAVEMENT MARKINGS - LEGENDS AND BARS

Comply with Section 00867 of the Standard Specifications modified as follows:

00867.40 General - DELETE this subsection.

00867.45 Installation – DELETE this subsection and REPLACE with the following:

Place permanent markings only when the manufacturer's representative determines that the pavement is ready for the pavement marking material.

Transverse joints will be allowed with no overlap or gap allowed at the joint.

Minimum initial retroreflectivity shall be 250 mcd/m^2/lx.

Apply one of the following marking material types:

- **Type B: Preformed, Fused Thermoplastic Film** - Install preformed, fused thermoplastic film as shown.

- **Type B-HS: Preformed, Fused Thermoplastic Film High Skid** - Install preformed, fused thermoplastic film high skid, that has intermixed reflective elements with factory installed crushed glass or aggregate on the surface for all staggered continental crosswalks, bike lane stencils, bike path railroad crossings, and other transverse pavement markings as shown.

- **Type BH**: Install Type B or Type B-HS as the Contractor elects.

00867.90 Payment - REPLACE this subsection, except for the subsection number and title, with the following:

The accepted quantities of work performed under this Section will be paid for at the Contract unit price, per unit of measurement, for the following items:

(Modify this list of pay items to only include project specific pay items. Delete those that are not required on the project. Re-alphabetize the list starting with (a), then (b), etc. Obtain information from the Traffic Designer.)

	Pay Item	**Unit of Measurement**
(a)	Pavement Legend, Type ____ : Arrows	Each
(b)	Pavement Legend, Type ____ : "ONLY"	Each
(c)	Pavement Legend, Type ____ : "SCHOOL"	Each
(d)	Pavement Legend, Type ____ : "SCHOOL" Large	Each
(e)	Pavement Legend, Type ____ : "BUS"	Each

(f) Pavement Legend, Type ____ : Railroad Crossing ..... Each
(g) Pavement Legend, Type ____ : Railroad Crossing, Narrow Each
(h) Pavement Legend, Type ____ : Railroad Crossing, BikeEach
(i) Pavement Legend, Type ____ : Bicycle Lane Stencil ... Each
(j) Pavement Legend, Type ____ : Disabled Parking ..... Each
(k) Pavement Legend, Type ____ : On-Street Parking..... Each
(l) Pavement Legend, Type ____ : __' x __' Yield Line Triangle Each
(m) Pavement Legend, Type ____ : _____ ..... Each
(n) Pavement Bar, Type____ ..... Square Foot

(Include only the appropriate following paragraphs for project specific items. Delete the paragraphs that do not apply to the project. Re-alphabetize the paragraphs as appropriate to match the re-alphabetized list above.)

In items (a) through (n), the type of pavement marking material will be inserted in the first blank.

In item (m), the name of the legend will be inserted in the second blank.

Item (a) includes single or multiple headed arrows as required.

Items (f) and (g) include the R x R symbol, two 24 inch wide white pavement bars placed directly above and directly below the R x R symbol, and one 24 inch wide white stop bar placed prior to the tracks.

Item (h) includes the R x R symbol and one 12 inch wide white pavement bar placed above the R x R symbol.

Item (i) includes the bike lane stencil and arrow.

Item (j) includes the wheelchair stencil only. The 4 inch wide white lines used to mark the disabled parking space and access aisle will be paid for according to 00860.90

Item (k) includes the cross style marking or the end marking.

(Obtain information from the Traffic Designer to fill in the blank for items (l and m).

Item (l) includes one triangle used to form the yield line.

Item (m) includes _____ .

Item (n) includes all transverse pavement markings that are defined as a "BAR", including but not limited to, stop bars, crosswalk bars, chevron bars, transverse median bars, and transverse shoulder bars.

Payment will be payment in full for furnishing and placing all materials, and for furnishing all equipment, labor, and incidentals necessary to complete the work as specified.

Payment for work under this Section will be limited to 75% of the amount due until the Agency has received the signed warranty.

City of Bend Special Provisions to the
Oregon Standard Specifications for Construction

TABLE OF CONTENTS

PART 00900 – PERMANENT TRAFFIC CONTROL AND ILLUMINATION SYSTEMS

Section 00905 – Removal and Reinstallation of Existing Signs

Section 00910 – Wood Sign Posts

Section 00920 – Sign Support Footings

Section 00930 – Metal Sign Supports

Section 00940 – Signs

Section 00950 – Removal of Electrical Systems

Section 00960 – Common Provisions for Electrical Systems

Section 00962 – Metal Illumination and Traffic Signal Supports

Section 00963 – Signal Support Drilled Shafts

Section 00970 – Highway Illumination

Section 00990 – Traffic Signals

PART 00900 – PERMANENT TRAFFIC CONTROL AND ILLUMINATION SYSTEMS

Section 00905 – Removal and Reinstallation of Existing Signs

Comply with Section 00905 of the Standard Specifications.

00905.40 General – ADD the following after the paragraph that begins ("Remove to 1 foot . . ."):

Existing signs and posts meeting current standards and in good condition designated for "removal only" shall be protected and returned to the City of Bend Publics Works at 575 NE 15th Street, Bend, Oregon. Contact the Streets Division Supervisor at (541) 317-3000 at least one business day prior to delivery.

Section 00910 – Wood Sign Posts

Comply with Section 00910 the Standard Specifications modified as follows:

00910.40 Post Holes – ADD the following paragraph after the sentence that begins ("On completion of the work"):

When using posts treated with wood preservatives, maximize the distance between post placement and stormwater facilities (including streets) and, when installing or servicing the sign posts, take measures such as incorporating and maintaining soil berms to minimize the potential of stormwater runoff from within 20 inches of the post from reaching the street or other storm drainage facility.

Section 00920 – Sign Support Footings

Comply with Section 00920 of the Standard Specifications.

00920.80 Measurement – DELETE the paragraph that begins (“Estimated quantities of concrete…”).

Section 00930 – Metal Sign Supports

Comply with Section 00930 of the Standard Specifications modified as follows:

(Use the following subsection .01 when mast arm street name sign mounts are included in the project. Check with Designer.)

00930.01 Definitions and Terms - ADD the following:

Mast Arm Street Name Sign Mounts - This group includes the frame members, attachment channel or bracket, steel bands or cables, and fasteners necessary to install a street name sign on a signal mast arm.

00930.02 Working Drawings – DELETE the bullet "Square Tube Sign Supports" in the paragraph that begins ("Working drawings are not…").

00930.10 Materials – ADD the following in the paragraph that begins "Furnish galvanized bolts…", after the words "job site":

Minor Sign Supports

REPLACE the sentence that begins ("Galvanizing shall conform to…") with the following:

Except for square tube sign supports, galvanizing shall conform to the requirements of Section 02530. Galvanize square tube sign supports according to ASTM A653 G140.

(Use the following subsection .80 to list the estimated quantities of steel. List items by pay item name. Obtain information from the Designer)

00930.80 Measurement – ADD the following to the end of this subsection:

The estimated quantities of structural steel are as follows:

Item	Estimated Quantity (Pound)

00930.90 Payment – REPLACE the paragraph that begins ("No separate or additional payment…") with the following:

No separate or additional payment will be made for route marker frames, wind bracing, pole clamps, stainless steel clamps, mast arm street name sign mounts, or special sign brackets.

Section 00940 – Signs

Comply with Section 00940 of the Standard Specifications modified as follows:

(Use the following subsection .00 when directed by the Sign Designer. If used, include SP937.)

00940.00 Scope – ADD the following to the end of this subsection:

Paint the backs of aluminum substrate signs, and all metal sign supports, according to Section 00937.

00940.03 Drawings – REPLACE the sentence that begins (“Copies of working drawings…”) with the following:

Within 30 calendar days after executing of the Contract, submit at least three copies of working drawings for each non-standard sign on the project. Obtain Agency approval prior to fabrication.

00940.46 Inspection - REPLACE the sentences that begin "Inspection will…" and "Testing for…" with the following sentence:

Inspection will be for conformance to the plans and Specifications, and for conformance to nighttime visibility.

(Use the following addition to subsection .80 when City-provided signs are required. Check with Sign Designer.)

00940.80 General – ADD the following sentence to the end of the sentence that begins “(No deductions will be . . .”):

No measurement will be made for signs furbished by the Agency.

(Use the following addition to subsection .90 when City-provided signs are required. Check with Sign Designer.)

00940.90 Pament – ADD the following sentence to the paragraph that begins (“The accepted quantities for signs…”):

No payment will be made for signs furnished by the Agency.

Section 00950 – Removal of Electrical Systems

(Follow all instructions. If there are no instructions above a subsection, paragraph, sentence, or bullet, then include them in the project but make necessary modifications to only include project specific specifications. Delete specifications that do not apply to the project.)

Comply with Section 00950 of the Standard Specifications modified as follows:

(Use the following subsection .02 to define the electrical systems. Obtain information from the Signal Designer. Remove the "(s)" or the parentheses, whichever is applicable.)

00950.02 Definitions - ADD the following after the "**Electrical Systems**" definition:

The electrical system(s) to be removed under this Contract include:

(Use the following lead-in paragraph and subsection .42 when salvaging and stockpiling removed materials. Be sure that a "public interest finding letter" is on file before including this subsection. Contact Engineer for all information regarding equipment to be salvaged. List materials and stockpile locations.)

ADD the following subsection:

00950.42 Salvaging and Stockpiling Materials - The following materials will remain the property of the Agency. Salvage the materials and stockpile them at the locations indicated. Contact Engineer to confirm delivery 48 hours prior to delivery.

Materials	Stockpile Locations

(Use the following subsection .90 when salvaging and stockpiling removed materials.)

00950.90 Payment - ADD the following paragraph after the paragraph that starts ("Payment will be payment . . ."):

No separate or additional payment will be made for salvaging and stockpiling materials.

Section 00960 – Common Provisions for Electrical Systems

Comply with Section 00960 of the Standard Specifications modified as follows:

00960.41(f) Disposition of Waste Materials – REPLACE this subsection with the following subsection:

00960.41(f) Disposal of Materials – Dispose of all materials according to 00290.20.

(Use the following lead-in paragraph and subsection .47 when temporary signal wood poles are required. Check with Designer.)

ADD the following subsection:

00960.47 Wood Poles - Submit wood pole designs according to 00960.02 including proposed ANSI 05.1 wood pole Class, guy anchor and span wire designs, and pole setting depths.

Section 00962 – Metal Illumination and Traffic Signal Supports

Comply with Section 00962 of the Standard Specifications modified as follows:

00962.05(c) Illumination Supports – ADD the following to the end of this subsection:

The following standard illumination pole drawings are prequalified for use on the Project:

Ameron Pole Products Division	Drg. OR7, Rev. C, 1/02 Drg. OR8, Rev. C, 1/02 Drg. OR9, Rev. E, 2/02
Union Metal Corp.	Drg. 71049-B18 sh 1, R3, 2/99 Drg. 71049-B18 sh 2, R3, 2/99 Drg. 71049-B19 sh 1, R3, 2/99 Drg. 71049-B19 sh 2, R3, 2/99
Northwest Signal Supply	Drg. NWS2285M, 9/00
Valmont Industries Inc.	Drg. DB00386 sh 1, Rev. B, 3/12/03 Drg. DB00386 sh 2, Rev. B, 3/12/03 Drg. DB00386 sh 3, Rev. B, 3/12/03 Drg. DB00387 sh 1, Rev. B, 3/12/03 Drg. DB00387 sh 2, Rev. B, 3/12/03

00962.10 Materials – ADD the following to the end of the material list:

High-Strength Fasteners 02560.20

00962.41(b) Disposition of Waste Materials – DELETE and REPLACE this subsection with the following:

Disposal of Materials – Dispose of all materials according to 00290.20.

Section 00963 – Signal Support Drilled Shafts

Comply with Section 00963 of the Standard Specifications modified as follows:

00963.10 Materials – ADD the following paragraph to the end of this subsection:

Provide the commercial grade concrete mixture with a slump of 8 inches ± 1 1/2 inches.

Section 00970 – Highway Illumination

Comply with Section 00970 of the Standard Specifications modified as follows:

00970.00 Scope – DELETE and REPLACE with the following:

In addition to the requirements of Section 00960, Section 00962, and Section 02926, install highway illumination according to the following Specifications.

ADD the following subsection:

00970.50 Grounding and Bonding – In addition to the requirements of 00960.50 and 00962.50, ground and bond metal illumination poles and high mast towers according to the following:

Install 1 inch non-metallic conduit from the pole base to the concrete and polymer concrete junction box at each pole. Install a ground rod in each junction box and install No. 6 AWG copper ground wire from the ground stud in the pole base to the ground rod in the junction box. The ground rod may be installed in the same junction box that provides illumination circuitry to the pole, however, provide a separate and independent conduit for the ground wire. Bond all metal conduit and metal junction box covers, if used, together to the ground rod.

On the inside of high mast tower shafts, weld a 1/2 inch Type 308, 309, or 310 threaded stainless steel stud for a grounding lug. Locate the grounding lug 90 degrees from and level with the bottom of the handhole.

00970.80 Measurement – REPLACE the sentence that begins and ends "The estimated quantities of…the Special Provisions." with the following:

The quantities of lighting poles and arms are listed on the Project plans.

Section 00990 – Traffic Signals

Comply with Section 00990 of the Standard Specifications modified as follows:

00990.00 Scope – DELETE in its entirety and REPLACE subsection with the following:

In addition to the requirements of Section 00960, Section 00962, and Section 02925, install traffic signals according to the following Specifications.

(Use the following subsection .42 when audible pedestrian signals are required. Check with Signal Designer before using.)

00990.42 Indication Equipment – ADD the following to the end of this subsection:

(h.) Audible Pedestrian Signal (APS) - Provide a unique APS sound coincidental with the WALK indication. The APS system shall include a solid state electronic board, power supply, enclosure, loudspeaker, and mounting hardware necessary for fulfilling the intended use and the applicable portions of Standard Specification for Microcomputer Signal Controller.

(1) General - Provide an actuated delay time button that is adjustable in one-second increments throughout the range of 0 to 15 seconds.

The APS unit shall have a sound inhibit circuit capable of control by an external device.

(2) Electrical Requirements - The APS unit shall operate on 95 to 130 VAC, 60Hz, ≤ 3 W.

Provide a power protection circuit consisting of both fuse and transient protection.

Provide an optically isolated circuit allowing delayed actuation of the audible signal.

(3) Environmental Requirements - The APS unit shall function properly throughout an ambient air temperature range of -35 °F to +165 °F.

(4) Outputs - Provide voice message, including automatic repeat capability for messages up to 20 seconds in length.

The audible signal shall be self-adjusting based on ambient noise during the WALK period.

The volume level at a distance of 3 feet from the APS enclosure shall be 66 dB typical, with a maximum of 90 dB.

The minimum volume level shall be adjustable proportionally from 66 dB to 90 dB without dismantling the APS unit housing.

Provide two switch-selectable electronic sounds according to the following:

Parameter	Sound No. 1	Sound No. 2
Sound type	"Peep-peep"	"Cuckoo"
Method	Electronic var. frequency tone	Electronic var. frequency tone
Period	1.0 sec. ± 20%	1.5 sec. ± 20%
Duration	0.2 sec. ± 20%	0.6 sec. ± 20%
Frequency Base	2800 Hz ± 20%	1100 Hz ± 20%
Frequency Deviation	– 800 Hz ± 20%	+120 Hz ± 20%

00990.43(a) Pedestrian Push Buttons – REPLACE the sentence that begins (“Install push buttons…which it is intended.”) with the following:

Install pushbuttons in a standard H-frame mount, unless otherwise noted on the plans. All pushbutton assemblies shall include an arrow pointing to the crosswalk for which it is intended.

ADD the following:

(Use the following subsection .43(c) when video detection is included in the Project. Check with the Signal Designer before using)

00990.43(c) Video Detection System:

(1) Installation - The product supplier of the video detection system shall supervise the installation and the testing of the video equipment. A factory certified representative from the manufacturer shall be on-site during installation. The factory representative shall install, make fully operational, and test the system as indicated on the traffic signal drawings and this specification.

(2) Warranty - The video detection system shall be warranted against manufacturing defects in materials and workmanship for a period of three years from date of installation. The video detection supplier shall provide all documentation necessary to maintain and operate the system.

(Add the following City-specific special provisions on all projects with traffic signal control equipment)

00990.70(b) Control Equipment Testing – REPLACE the sentence that begins ("The following traffic signal…") with the following:

The following traffic signal control equipment will be tested by the Oregon Department of Transportation for conformance with the Contract Documents before being installed:

DELETE the paragraph that begins with "Control equipment will…" and substitute the following:

The Contractor shall pay all costs incurred as a result of testing and retesting of all equipment to pass the required Oregon Department of Transportation testing procedures at the Signal Lab in Salem, Oregon.

00990.70(e) Control Equipment Acceptance – REPLACE the paragraph that begins with "Traffic signal control equipment..." with the following:

Traffic signal control equipment that successfully passes the testing procedure will be certified by ODOT as acceptable for installation. Acceptability for installation does not guaranty final acceptance of the completed installation.

00990.70(f) Control Equipment Installation – REPLACE this subsection with the following:

Be responsible for pick-up, delivery and installation of the controller cabinet.

Other control equipment not physically wired to the controller cabinet will be stored at the test facility until the signal installation is ready to be turned on. No more than 30 calendar days prior to the anticipated signal completion date, contractor shall pick-up the other control equipment, such as controller units, input devices, switch packs, monitor units, miscellaneous plug-in devices and auxiliary devices and deliver to:

ODOT Region 4 Tech Center
63034 OB Riley Road
Bend, OR 97701
Coordinate delivery with Dave Foster, Region Traffic Operations Engineer, at (541) 388-6472.

00990.70(g) Field Testing – REPLACE the paragraph that begins ("Field testing of traffic…") with the following:

Field testing of traffic signal installations will be performed by ODOT crews on behalf of the Agency. Notify the Engineer one week in advance of the anticipated signal completion date. The Engineer will notify ODOT staff of the anticipated date. Field testing will be performed within ten working days following the date of completion. The Engineer will notify the Contractor of the test results. If an intermediate Contract time is specified for signal work, the Engineer may suspend that portion of the work so that

time may be excluded according to 00180.50(e) after the final corrections have been completed, or the signal is turned on.

00990.70(h) Traffic Signal Turn–On – REPLACE the paragraph that begins (“The Engineer will establish…”) with the following:

The Engineer will establish the date and time the installation is to be turned on. Signals will not be turned on Fridays or on days preceding a holiday. The Contractor shall allow two weeks from the time of notification that the work is complete for field testing and turn-on of the installation.

(Use the following subsection .90 when Section 00963 is included for standard mast arm pole drilled foundations or standard strain pole drilled foundations. Delete the pole foundation type that does not apply. Remove the parentheses.)

00990.90 Payment – ADD the following paragraph before the paragraph that begins ("No separate or additional…"):

Standard mast arm pole foundations (and standard strain pole foundations) will be paid for according to 00963.90.

City of Bend Special Provisions to the Oregon Standard Specifications for Construction

TABLE OF CONTENTS

PART 01100 – WATER SUPPLY SYSTEM

Section 01120 – Irrigation Systems

Section 01140 – Potable Water Pipe and Fittings

Section 01150 – Potable Water Valves

Section 01160 – Hydrants and Appurtenances

Section 01170 – Potable Water Service Connections, 2 Inch and Smaller

PART 01100 – WATER SUPPLY SYSTEM

Section 01120 – Irrigation Systems

Comply with Section 01120, Irrigation Systems, of the Standard Specifications.

Description

01120.01 Qualifications – ADD the following subsection:

01120.01a Contractor Requirements – Contractors are required to be properly certified in the installation of Automatic irrigation equipment and/or be able to demonstrate the knowledge, skills, and ability to work with the City of Bend, subcontractors, and/or vendors in order to properly install smart irrigation equipment. An independent outside consultant may be hired by the Contractor to fulfill the requirement.

ADD the following subsection:

01120.02 References

Always REFERENCE THE LATEST VERSION of the following information:

American Society for Testing and Materials

ASTM D 2241-89	Poly (Vinyl Chloride) (PVC) Pressure - Rated Pipe (SDR – PR)
ASTM D 2464-89	Threaded Poly (Vinyl Chloride) (PVC) Plastic Pipe Fittings, Schedule 40
ASTM A 5	Steel Pipe and Tubing
ASTM D 2564-89	Solvent Cements for Poly (Vinyl Chloride) (PVC) Plastic Pipe and Fittings
ASTM D 2774-72	Standard Recommended Practice for Underground Installation of Thermoplastic Pressure Piping (R 1983)
ASTM D 2855-83	Standard Practice for Making Solvent-Cemented Joints with Poly (Vinyl Chloride) (PVC) Pipe and Fittings

American Water Works Association

AWWA C 800-84	Underground Service Line Valves and Fittings with Appendix on Collected Standards for Service Line Materials.

National Electrical Manufacturers Association

NEMA 250-85	Enclosures for Electrical Equipment (1000 Volts Maximum) (R1-1986, R-2-1988)

Underwriters' Laboratories, Inc.

UL 651-89	Schedule 40 and 80 Rigid PVC Conduit

International Assoc. of Plumbing and Mechanical Officials
UPC-1988 Uniform Plumbing Code

ADD section:

01120.10 General – ADD the following before the sentence that begins ("Furnish only commercial…")

Contractor Requirements – To facilitate standardization, the City of Bend requires Rain Bird products or the equivalent and/or smart compatible irrigation equipment, installation, and components. Submit alternate products for approval by the City of Bend before installation.

01120.11(d) Polyethylene Pipe – ADD the following subsection(s):

(3) Swing Joint Riser – PVC ST Ells (Marlex) - 6504 /5004 Installations (3)

The swing arm assembly shall be three PVC ST Ells (Marlex) designed to rotate in all directions, as shown on drawings.

The nipple length shall be 10 inches.

(4) Swing pipe tubing (1800 spray head and 1300 bubbler installation only): the swing pipe shall be flexible black tubing constructed of virgin linear low-density polyethylene material. The tubing shall have a wall thickness of 0.090 inch It shall have an inside diameter of 0.0490 inch for use with SB Series spiral barb fittings without the necessity of glue or clamps. The model number and logo shall be printed at 12-inch intervals along the length of the tubing. Each 18-inch length of tubing shall be capable of pressure testing at the rate of 100 pounds per square inch (psi) per second to a minimum burst pressure of 475 psi. The tubing shall have an operating pressure rating of 80 psi at 110 degrees F. See standard detail drawing.

01120.12 Automatic Controllers – ADD the following bullets under **"Weather Station"** after the paragraph that begins ("A field station . . ."):

- **Freeze Clicks** – Used on spray and rotor zones where there is a potential of applying water on to any hard surface in freezing temperatures. In most installations, the sensor acts as a switch to break the circuit to the solenoid valves of the irrigation system when temperatures approach freezing. This allows the timer to advance as scheduled, but stops the valves from activating. Once temperature periods are above 37°F, the switch closes, allowing normal operation.

- **Flow Sensor** – Flow sensor shall be FS-100P, FS-150P, FS-200P, FS-300P, FS-400P, or approved equal. Size as required.

- **Pulse Decoder** – Pulse decoder shall be DEC-PUL as manufactured by Rain Bird Sprinkler Mfg. Corp., Glendora, California.

- **Flow Meter** – Model PT #1502 wall mount in NEMA cabinet, as manufactured by Rain Bird Sprinkler Mfg. Corp., Glendora, California.

01120.11 Pipe, Tubing, and Fittings – ADD the following subsection:

(e) Conduit – Conduit shall be Schedule 40, rigid polyvinyl chloride conduit, meeting the requirements of UL 651.

Condolets shall be Schedule 40. Size as required.

ADD the following subsection after the bullet "**Flow Meter"**:

01120.12(a) Automatic Irrigation Controllers – The controller shall be weather-based ET controller, with a built-in scheduling engine. The irrigation controller shall be a hybrid type that combines electro-mechanical and microprocessor-based circuitry capable of both fully automatic and manual operation. The ET controller will be approved by The City of Bend and have the following minimum specifications:

(1) Hardware

- The Controller shall have a minimum 3-year warranty.
- The Controller shall be UL-listed.

(2) Weather Data

- Weather data shall be provided for local area at a resolution of 1 square kilometer or better.

- Weather data shall use data from at least five weather stations to determine weather conditions for each controller.

- Weather data shall be delivered daily and wirelessly to each controller with no weather sensor required on site to calculate accurate ET.

- The communication system shall be able to detect if weather data is received by the controller and engage a backup process to re-send weather data as needed.

- The controller shall have the capability to be compatible with any controller-associated weather data sensors and equipment such as "Freeze Clicks," soil moisture sensors, flow sensors and other weather or water conservation- related data collectors and sensors.

(3) Controller Programming

- Controller shall have station-/zone-specific scheduling capability

- Controller shall include a scheduling engine that uses plant, soil, slope, sprinkler precipitation rate and sun exposure settings to automatically calculate a daily irrigation schedule.

- Controller shall use a maximum allowable depletion (MAD) model FOR EACH ZONE to determine watering days and 'skip' (non-watering) option days.

- MAD shall be able to be custom programmed by user.

- Controller shall provide 'water rationing' that assures each zone gets a rationed minimal amount of water, if a defined 'water window' is insufficient to allow watering to be completed to all zones.

- Controller shall automatically create cycle and soak sequences for user, based on soil and slope settings.

- Controller shall have the ability to be % (percent) adjusted plus (+) or minus (–) per each station.

- Controller shall have the ability to run multiple programs at the same time (overlap).

- Controller shall calculate and allow for run times at a resolution of 10-second intervals or smaller.

- Controller shall allow for two programs using set day pattern assignments, including day of week and odd /even day interval.

- Controller shall allow ET mode to be ON or OFF by station.

- Controller shall have a 'Rain Pause' feature that allows a pause for up to 100 days.

- Controller shall be capable of being operated manually at any time.
- Controller shall have an internal non-volatile memory that will retain the irrigation schedule for a minimum of 10 years without power. A 9 VDC rechargeable battery and recharging circuit shall be included for counting down the program-in-progress during a power outage, and shall allow programming of the controller when it is disconnected from the main power supply.

(4) History

- Controller shall be approved by The Irrigation Association's SWAT, (Smart Watering Advanced Technology) Testing Protocol of 100% efficiency and 0% runoff.
- SWAT protocol test results must include actual method of sending/receiving ET to the controller, in the manner being deployed in the field, as part of test results.
- Controller shall have a minimum of five public agency studies proving quantified water savings and dry weather runoff reduction.

01120.17(h)(2) Automatic Control Valves – ADD the following subsection:

(a) Remote Control Valves – 100-PE-B, 150-PE-B, 200-PE-B-By Rain Bird Sprinkler Mfg. Corporation, Glendora, California. Provide a scrubber valve (PE-S) for applications where the water supply is not from a potable water source (i.e., dedicated irrigation wells or from surface supplies such as canals) for the 1-inch, 1-½-inch, and 2-inch electric remote control plastic valves.

(b) Valve Tags – Each valve shall be number-tagged (Rain Bird Part No. VID1Y24 or brand and part number corresponding to approved equal.)

01120.18 Valve Boxes and Valve Chambers – ADD the following subsections:

(a) Carson Box Model 1730 – for Bermad, Kennedy, or double check valves. These shall be one-piece plastic with fiber-reinforced plastic cover. Provide brick supports, one (1) under each corner of the box.

(b) AMTEK 12STD PLS – for Remote Control Valves or Manual Valves. These shall be one-piece plastic, 11 x 17-inch, with fiber-reinforced plastic cover, marked with "IRRIGATION." Provide brick supports, one (1) under each corner of box.

ADD the following subsection(s):

01120.22 Sprinklers

(a) 6504 Full or Part Circle Pop-Up Rotor – By Rain Bird Sprinkler Mfg. Corp. or approved equal. The sprinkler shall have the following:

- The sprinkler shall have a screen attached to the drive housing to filter inlet water, protect the drive from clogging, and simplify its removal for cleaning and flushing the system.

- The sprinkler body shall have a double-wall construction 1-inch Female National Pipe Thread (FNPT) bottom inlet.

- The sprinkler shall have a standard rubber cover that designates the full circle sprinkler from the top, as well as designates each adjustment opening from the top.

- The sprinkler shall have a factory-installed nozzle as specified on the drawings.

- The angle of trajectory shall be 25 degrees from the horizontal.

(b) 5004-PC SAM 5004-FC-SAM full or part circle pop-up rotor – By Rain Bird Sprinkler Mfg. Corp. or approved equal. The sprinkler shall have the following:

- Arc adjustment from the top

- Water-lubricated gear drive design

- Standard rubber cover

- 40-360 degree arc rotation and reversing full circle rotation

- Standard angle nozzle providing 23 to 40 feet distance of throw

- Radius adjustment screw allows 25% radius reduction without changing nozzle

- 4-inch pop-up

- Additional o-rings and seals for extra protection in “gritty” water

- 3/4-inch NPT female bottom-threaded inlet

- Seal-A-Matic pressure regulating check valve option included

- Nozzle as shown on drawing

(c) 1804-SAM-PRS, 1806-SAM-PRS, 1812 SAM-PRS spray heads – By Rain Bird Sprinkler Mfg. Corp. or approved equal. The sprinkler shall have the following

- Seal-A-Matic pressure regulating pop-up spray sprinkler: 4-inch, 6-inch, or 12-inch pop-up spray shall be used when indicated on the design

- Sprinklers shall have a Seal-A-Matic check valve and a pressure-regulating device. These units shall be identifiable from the top with SAM-PRS markings on the cap.

- 4-inch and 6-inch pop-up spray shall use the bottom inlet

- The 1800 Series sprinkler shall use the Matched Precipitation Rate (MPR) series nozzles, as specified on the drawings

- The fixed-arc nozzle shall accept the 1800 Series or approved equal plastic screen to protect nozzle against clogging and to allow for radius adjustment

- The nozzle shall have a precipitation rate matched with other 1800 Series MPR or approved equal nozzles

(d) MP1000, MP2000, and MP3000 – MP Rotator Adjustable arc, adjustable radius matched precipitation rate sprinkler – By Walla Walla Sprinkler Company, a subsidiary of Nelson Irrigation Corporation, Walla Walla, Washington, or approved equal. The sprinkler shall have the following:

- The sprinkler shall be the viscous fluid brake rotary type and produce multiple rotating streams.

- The sprinkler shall produce and maintain a matched precipitation rate no greater than 0.6 inch per hour throughout the arc adjustment range and radius adjustment range (up to 25% of radius reduction) when spaced at 50% wetted diameter.

- The part circle sprinkler shall have an infinitely adjustable arc between 90 and 210 degrees or between 210 and 270 degrees, depending on the model selected. The full circle sprinkler shall irrigate a full 360 degrees.

- Full or part circle sprinklers shall be capable of up to 25% radius reduction using a stainless steel radius adjustment screw on top of the nozzle. The radius reduction screw shall have a slip clutch mechanism to prevent internal damage if turned past the minimum or maximum radius settings. The radius reduction screw shall reduce the pressure and flow upstream of the nozzle, thereby maintaining stream integrity.

- Part circle sprinklers shall have arc adjustment capabilities using a stainless steel ring at the top edge of the nozzle. The adjustment ring should be effective only while the sprinkler is popped up and ineffective while the sprinkler is not popped up. When turned past the minimum or maximum arc limits, the adjustment mechanism shall have a slip clutch action to prevent internal damage. This same slip clutch shall allow the orientation of the fixed edge of the variable arc when installed on a fixed riser or in a pop-up body. This is independent of and in addition to any ratchet that may exist in a pop-up body.

- The sprinkler shall have a pop-up that occurs at approximately 15 psi of water pressure. Upon cessation of water pressure, the sprinkler shall pop down. When installed in a pop-up body, the sprinkler pop-up shall occur after the pop-up of the body stem. Upon decreasing pressure, the sprinkler pop- down shall occur before the pop-down of the body stem.

- The sprinkler nozzle orifice shall be manufactured from urethane material for durability. The sprinkler shall be fitted with a detachable filter stem.

- Sprinkler assembly models MP1000, MP2000, and MP3000 shall be able to be installed in pop-up spray head bodies having a 5/8-27 UNS male threaded stem (Rain Bird) and nominal pop-up heights of 2", 3", 4", 6", or 12". Sprinkler assembly shall also be able to be attached to a ½ FIPT x 5/8-27 UNS male threaded adapter (Rain Bird) for use on fixed pipe risers. Models MP1000T, MP2000T, and MP3000T shall be able to be installed in pop-up sprayhead bodies having a 5/8-28 UNS female threaded stem (Toro) and nominal pop-up heights of 2", 3", 4", 6", or 12." Sprinkler assembly shall also be able to be attached to a ½ FIPT x 5/8-28 UNS female threaded adapter (Toro) for use on fixed pipe risers.

(e) PA-80 Plastic Adapter – The plastic adapter shall have a ½-inch Male National Pipe Thread (MNPT) outlet and a fine threaded female inlet that will accept an 1800 pop-up stem, thus adapting the 1800 Series sprinkler for use with various ½-inch FNPT sprinklers and nozzles

ADD the following subsection:

01120.23 Double Check Backflow Prevention Assemblies: Install Watts 007 Series or approved equal on all new systems. Size as required. Permanent test fittings with threaded protective caps to keep out debris shall be installed.

01120.40(a) Plumbing – ADD the following subsection:

(3) Blowouts – Install a blowout connection point to facilitate winterization by the use of compressed air on all electric solenoid controlled underground irrigation systems. The entire system shall be manually drainable. Install blow out fittings after the Double Check Valve assembly. The end point of each underground mainline circuit 4 inches or larger shall be equipped with a 4-inch x 2-inch mechanical tap cap, 2-inch x 36-inch galvanized nipple, 90 degree fitting, and a brass ball valve. The valve shall be installed with a valve box. See typical drawings for installation details.

01120.43 Piping – ADD the following after the paragraph that begins ("Place all live mains"):

Provide for thermal movement of components in the system. Use threaded nipples for risers to each sprinkler to facilitate easy replacement. Use swing joint riser or swing pipe as specified.

Concrete thrust blocks shall be provided at changes in direction of mainline piping and at the end of mainline piping with the bearing surface against undisturbed soil normal to the direction of the thrust on pipes 3 inches or greater in diameter.

01120.44 Pipe Jointing – ADD the following subsection:

(e) Pipe Joints: All pipe joints shall be solvent welded and made according to ASTM D 2855-83 Standard Practice for Making Solvent-Cemented Joints with Poly (Vinyl Chloride) (PVC) Pipe and Fittings. Solvent welded joints shall be installed by workers qualified and experienced in the joining of PVC pipe and materials. Threaded joints shall be made with polytetrafluoroethylene sealant. Mechanical joints shall be installed on pipe larger than 3 inches in diameter. Irrigation valves on mainlines 3 inches and larger shall be installed using FIPT FLO PVC saddles sized appropriately. (Example: 4-inch pipe would use a 4-inch x 2-inch FIPT.)

01120.45 Installation – ADD the following subsection:

(h) Drain Pockets – Excavate a minimum of 10 cubic feet. Backfill with drain gravel to 12 inches below grade. Cover with geotextile and 6 inches of topsoil.

01120.46 Low Voltage Electrical Installation – ADD the following after the paragraph that begins (“In wire adjacent . . .”):

Provide one control circuit for each zone. All wiring, including low voltage control wiring, shall be in conduit. Provide a 2-inch minimum conduit for future phone or telemetry connections.

Provide 16-gauge insulated ‘trace wire’ for locating lateral irrigation lines. All splices shall be waterproof. Coil wire ends in the valve box.

01120.49 Backfill – ADD the following after the paragraph that begins “(If sufficient suitable . . .”):

The minimum horizontal clearance between lines for piping 2 inches or less is 4 inches, and 12-inch minimum clearance for 2-1/2-inch and larger pipe. The minimum vertical clearance between pipe shall be 4 inches.

Section 01140 – Potable Water Pipe and Fittings

Comply with Section 01140, Potable Water Pipe and Fittings, of the Standard Specifications, Potable Water Pipes, and Fittings modified as follows:

Description

01140.00 Scope – ADD the following:

The Contractor shall secure and comply with all applicable City, County, and State permits including Construction Safety and Health Standards. Prior to installing a water facility in an unimproved street, the street shall be brought to subgrade to ensure that adequate bury, depth of cover, and utility separation is provided.

This section covers the work necessary for furnishing and installing water pipe and fittings normally used for water distribution systems. Water line depth from finished grade to top of pipe shall be a minimum of 36 inches and a maximum of 72 inches

Proposed corrosion protection measures shall be approved by the City Engineer prior to final design.

01140.10 Materials – DELETE in its entirety and ADD the following:

Unless otherwise specified, all materials shall be new of U.S.A. domestic manufacture with the certification of the country of origin. Materials shall meet all AWWA standards and applicable City, County, and State code requirements, for the specified materials.

Piping materials used in pump station, meter vault, or control valve applications shall be approved by the City Engineer on a case-by-case basis.

Additionally, the following material requirements shall be part of all new construction:

- All fittings being purchased by suppliers shall be purchased directly from the Manufacturer.

- Mechanical joint C153 ductile iron fittings shall be marked with the Manufacturer's name.

- Mechanical joint water main fittings with accessories, 4-inch through 36-inch, shall be manufactured in accordance with and meet all applicable terms and provisions of standards ANSI A21.10 and AWWA C110 and ANSI A21.11 and AWWA C 111, current revisions. Mechanical joint fittings 4- through 24-inch shall be rated for 350 psi working pressure and fittings 30- and 36-inch shall be rated for 250 psi working pressure. Mechanical joint fittings with branches and 14-inch or larger caps and plugs shall be rated for 250 psi working pressure, and 4- through 12-inch minimum

size UL listed and marked for Fire Main Equipment. Cement-lined and seal-coated fittings shall meet ANSI A21.4 and AWWA C104 standards. All coated and lined fittings shall meet requirements of NSF-61.

- Approved Manufacturers: Tyler Pipe, Union, Clow, and American Iron Pipe Co.

(a) Ductile Iron Pipe – Ductile iron pipe shall be centrifugally cast in metal molds and cement-lined in accordance with AWWA specification C151-76. Push-on type joint pipe shall be used except where conditions require mechanical joints as shown and approved on plans. No material shall be shipped inside coated pipe. Pipe shall meet the following specifications:

(1) 4-inch through 12-inch I.D., Class 52 Ductile, AWWA Specification C151-76 DI pipe.

(2) 14-inch I.D. and larger, Class 50 Ductile, AWWA Specification C151-76 DI pipe.

- Approved Manufacturers: U.S. Pipe, Pacific States Pipe, American Pipe and Griffin Pipe.

(b) Service Pipe – Service lines from the main to the meter stops and 6 feet beyond meter box shall be as follows:

I.D.	Type
1” and smaller	Type K soft annealed copper tubing (non-rigid)
1 1/4 ” and larger	Ductile iron or rigid copper (Type K-hard)

(c) Service Saddles – Service saddles for 2-inch water services shall be used on existing and new water lines. Where service saddles are allowed, they shall be Mueller double strap DR25, or as approved by the Utilities Manager. The brass nipple between saddle and valve is to be installed horizontally; saddle bolts shall be torqued to manufacturer’s specifications. If a 1-1/2-inch service is desired by the customer, this reduction shall be made within the 2-inch meter setter.

(d) Saddle Tap – Bit size shall be as follows: 1-inch tap - 15/16-inch bit; 2-inch tap – 1 7/8-inch bit. All bits to be Mueller or equal, and approved for tapping cast iron, DI, galvanized and steel pipe.

The tapping machine shall be a Mueller #E-5, #D-5, or equal.

(e) Direct Tap – 1-inch tap bits to be Mueller AWWA tapered thread combined drills and taps or equal, and must be approved for tapping cast iron and DI water mains. 2-inch and larger taps shall be made using a hole saw.

(f) Pipe Fittings

(1) Buried – Buried ductile iron fittings with mechanical joints shall meet ANSI 21.10, 250 PSI working pressure, with full body glands (AWWA C-110/C-153), bolts, and gaskets in accordance with ANSI 21.11. A non-toxic vegetable soap lubricant shall be supplied in sufficient quantities for installing the pipe. Lubricant must meet the appropriate AWWA Standards.

(2) Aboveground – Aboveground ductile fittings with threaded flanged joints or restrained joint meeting appropriate ANSI specifications, 250 PSI working pressure, bolts and gaskets in accordance with appropriate ANSI specification.

(3) Solid Sleeves – Solid sleeves 4- to 12-inch in diameter must be a minimum of 12 inches long; 14-inch-diameter or larger must be the long pattern. All solid sleeves must be standard Pacific States (Union /Tyler Foundry) or U.S. Pipe M.J. DI sleeve. Appurtenances shall be of same manufacturer.

(g) Plugs – **Caps** – Caps shall be mechanical joint DI and properly restrained.

(h) Special Coatings and Linings – Special coatings and linings shall be approved by the City Engineer prior to the time of purchase.

(i) Concrete for Thrust Blocking – Commercial grade concrete for thrust blocking shall conform to ASTM C 94, Alternate 2, and shall be proportioned to obtain a 28-day compressive strength of 4000 pounds per square inch. “Sacrete” type products are not allowed.

01140.11 Handing Pipe and Fittings – ADD the following subsection:

(c) Daily Production and Staging No more pipe material shall be strung on job than can be installed in one shift. Material that is rejected at the point of delivery because of defects or damage shall be replaced by the Contractor. Material damage subsequent to acceptance by the Engineer or the City shall be replaced by the Contractor.

01140.41 Laying Pipe – DELETE in its entirety and REPLACE with the following:

(a) Push-on Joint Pipe – Ductile iron pipe with rubber gasket Tyton and/or Fastite type joints shall be laid and jointed in strict accordance with the manufacturer’s recommendations and in accordance with the requirements of these Specifications.

Deflection limits shall conform with Figure 1. For pipe sizes not listed, maximum deflection shall be one-half the manufacturer's maximum deflection.

Lubricant for the pipe gaskets shall be furnished by the pipe manufacturer.

Once installed, rubber gaskets cannot be recovered and reused and must be discarded.

(1) Push-on Joint Restraints for Ductile Iron Pipe – Push-on joints shall be restrained using field Lok gaskets for Tyton joint pipe and fast grip gaskets for Fastite joint pipe, using stainless steel locking segments vulcanized into the gaskets.

(2) Approved manufacturers of mechanical restraints are Ebba Iron – 1100 Series "Mega-Lug," and Romac – Romagrip.

One half of the maximum deflection will be permitted.

Maximum Deflection of Tyton Gasket Joint Pipe
(Based on 18-Foot Pipe Length)

Pipe Size	Bend in One Joint Angle A	Deflection in Inches D	Approx. Radius in Feet of Curve Produced by Succession Of Joints
6"	2° 00'	8"	450'
8" through 12"	2° 00'	8"	450'
14" through 24"	1° 30'	6"	650'

FIGURE 1
Pipe Deflection

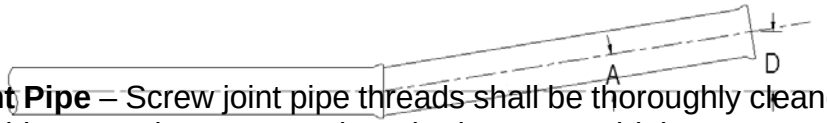

(b) Screw Joint Pipe – Screw joint pipe threads shall be thoroughly cleaned by wire-brushing, swabbing, or other approved method. Approved joint compound shall be applied to the threads prior to making the joint. Joints shall be watertight at test pressures before acceptance.

(c) Installation of Mechanical and Flexible Couplings – Mechanical and flexible couplings shall be provided where indicated on the plans and shall be installed in accordance with the manufacturer's recommendations. Before pipe lengths are joined, the ends of each pipe shall be thoroughly cleaned of oil, scale, rust, and dirt for a minimum distance of at least 8 inches from the end. Gaskets shall be wiped clean and lubricated with pipe lubricant for installation on the pipe ends. Coupling

bolts shall be tightened progressively, drawing up bolts on opposite sides until all bolts have a uniform tightness. Workers tightening bolts shall be equipped with torque-limiting wrenches or other approved wrench type. Mechanical and flexible couplings shall be tested when the tests on the adjacent pipe are made. If the couplings do not pass the requirements of the leakage tests, the couplings shall be removed and reassembled on the pipe, and the leakage test shall be repeated. Deflection shall be in conformance with Figure 1. For pipe sizes not listed, maximum deflection shall be one-half the manufacturer's maximum deflection.

Maximum Deflection of Mechanical Joint Pipe
Safe Deflection for 150 PSI[1]
Based on 18-Foot Pipe Length (see Figure 1)

Pipe Size	Maximum Joint Angle A	Deflection in Inches D	Approx. Curve Radius produced by maximum angle
8"-12"	2º 00'	8"	450'
14"-16"	1º 45'	7"	590'
18"-20"	1º 30'	5"	685'
24"	1º	4"	1000'

Note: For test pressures above 150 psi, reduce the tabulated deflection by 10% for each additional 150 psi.

(d) Tapping – Tapping of City mains shall be done when the air temperature is at least 35°F and rising. When the air temperature is between 20°F and 35°F, taps may be permitted by the Engineer if the tapping bit is protected and heated to 35°F or above. If a heated tapping bit is used, the work must be backfilled immediately upon completion.

(e) Hot Taps – When appropriate and/or shown on the plans, branches and large services may be connected to existing City of Bend water lines by using a tapping sleeve and tapping valve. This procedure shall be performed only by a City-approved contractor and said approval shall be obtained from the City Engineer or their authorized representative at least 48 hours in advance of performing the hot tap. No pipe shall be exposed for tapping without a City representative onsite.

All hot tap sleeve and tee assemblies shall be air tested prior to start of tapping operation.

Hot taps shall be scheduled only during the hours of 7:30 AM to 3:30 PM, Monday through Friday.

All hot taps 4-inch and larger are required to be thrust blocked per Section 01140.44.

(f) Tapping Sleeve Requirement – Match sleeve types as shown in the table with the type of main being tapped. Tapping sleeves shall be as manufactured by JCM, Mueller, Romac, or Smith Blair and as specified below:

(1) Epoxy-coated Fabricated Steel Sleeve; JCM 532 or equal.

(2) Stainless Steel Sleeve; JCM 432; Romac SST III (with stainless steel flanges); Mueller H-304; Smith Blair 665, or equal

NOTE: Numbers in tables below correspond to accepted sleeve types.

For Taps Other Than Size-on-Size					
Type of Main Being Tapped	**Main 8"and Under**	**Main 10" or 12" Tap 8" and Under**	**Main 12" 10" Tap**	**Main 14" and Over Tap 8" and Under**	**Main 14" and Over Tap 10" and 12"**
C-900 Plastic	2	2	2	N/A	N/A
Steel Size Plastic	2	2	N/A	N/A	N/A
Ductile Iron	2	2	2	1	
Cast Iron (spun)	2	2	2	1	1
Cast Iron (pit cast)	2	2	2	1	1
Steel	2	2	2	1	1

For Size-on-Size Taps (ex. 8" tap on 8" mainline)				
Type of Main Being Tapped	**Main 8" and Under**	**Main 10"**	**Main 12"**	**Main 14" and Over**
C-900 Plastic	2	2	2	N/A
Ductile Iron	2	2	2	1
Cast Iron (spun)	2	2	2	1
Cast Iron (pit cast)	2	2	2	1
Steel	2	2	2	1
N/A = not applicable N/R = not recommended				

01140.44 Thrust Restraint – DELETE in its entirety and REPLACE with the following:

(a) Thrust Blocking – All additions and alterations to the City of Bend water system shall incorporate mechanical restraint systems into their design. Thrust blocking and the use of a deadman to supplement mechanical restraints are only allowed with the

approval of the City Engineer, and must be designed by the Engineer of Record and detailed on plans.

(b) Thrust Blocking Materials – Concrete shall conform to the requirements of the Standard Specifications, Section 00440, Commercial Grade Concrete, and shall develop a minimum compressive strength of 4000 psi at 28 days, per Section 00440.00. “Sacrete” type products are not acceptable.

(c) Anchorage – Reaction or thrust blocking shall be placed as shown on the plans. Blocking shall be placed between the undisturbed ground and the fitting to be anchored. Reaction blocking shall be placed so as to allow access to fitting joints unless specifically shown otherwise on the Plans. The pipe and joint fittings shall be wrapped with 6 mm plastic sheeting before placing concrete.`

(d) Existing Thrust Blocks – No existing thrust blocks shall be removed by Contractor unless a City of Bend representative is on site for inspection and coordination.

01140.49 Backfilling – DELETE in its entirety and REPLACE with the following:

After the pipe has been installed an inspected, backfill the trench as follows:

(a) Pipe Bedding – The trench shall be excavated to a minimum depth of 7 inches below the pipe to provide minimum bedding. Over-excavation shall be backfilled and compacted with pipe zone material to a grade of 4 inches to 7 inches below the pipe bell as specified below. The pipe bedding shall be uniform, at grade, and compacted prior to placing pipe.

(b) Compaction Testing – For waterline construction with a standard 3-foot cover depth, one compaction test shall be taken per 100 lf of trench at top of pipe zone and at finish subgrade elevations. For installations deeper than 3 feet, trench backfill shall be tested for each 3 feet of fill and 100 lf of trench. All sampling and testing, including material certifying tests, shall be performed by an independent testing laboratory. Sampling locations shall be determined by the City of Bend. All results, including failing tests, shall be submitted to the City of Bend prior to any pipe testing inspection.

(c) Electrical Continuity – When so stated in the Specifications, the Contractor shall provide adequate means to permit an electric current to pass across all pipe joints. The electrical connection shall be made by driving silicon-bronze wedges between the barrel and the bell of joints using rubber gaskets. Two wedges shall be installed per joint on opposite sides of the pipe on the horizontal centerline. The wedges shall be approximately 1 inch square and shall be tapered from 1/8-inch to 1/16-inch, approximately. The wedges shall have serrated edges to provide good contact. The voltage drop at 500 amperes current flow shall not exceed 1.0 volt per joint.

Field Testing

DELETE the following subsections in their entirety 01140.50, 01140.51, and 01140.52

ADD the following subsection:

01140.53 Filling, Flushing, and Hydrostatic Testing

(a) Certification – The Contractor's employee responsible for conducting these tests shall be approved by the City of Bend. This person shall be present at and shall supervise all phases of these procedures.

Prior to testing, the Contractor shall be certified by the City of Bend Water Division. This Certification shall be contingent upon the Contractor passing a standard test prepared by the City. This test shall prove the Contractor's organizational ability of the steps required for chlorinating/flushing/testing; and a field demonstration of their techniques.

The metering device used in chlorination and/or pressure test procedures must have been certified by the City Water Division within 6 months of the test.

(b) Testing Procedures – Testing procedures shall be conducted between 8:00 AM and 3 PM, Monday through Friday. Pressure testing shall be scheduled so completion is within these normal working hours. Chlorine and pressure tests shall be performed when the temperature is, or is expected to be, no less than 33ºF. Chlorine tests require a minimum of 24 hours duration.

The Contractor shall not operate any valve connected to City water lines or take any action that would affect the operation of the existing system except with a City representative present, and only at that representative's express direction.

(c) Flushing – The Contractor shall be responsible for all pipeline flushing, including but not limited to flushing air from service and main lines at time of chlorination, flushing chlorination water after all chlorination and rechlorination. System flushing procedures shall meet all State and Federal requirements for discharge and disposal.

Following removal of all air in the system, the Contractor shall thoroughly flush all lines with potable water. Flushing velocity shall not be less than 2 feet per second (fps). Flushing is considered completed when the system chlorine residual matches the background chlorine residual level of the City system at that point.

A portion of the flushing process for chlorinated systems may, after start-up with the Inspector, be completed by the Contractor without the Inspector being present. After chlorine residual testing on the City system and the chlorinated systems has been done and the inspector has operated the necessary valves, the Contractor may

independently complete the test. The Contractor will be furnished with appropriate forms to be completed as verification that the test results have been completed and the results are in compliance with City's Standards & Specifications.

(d) Chlorination – The Contractor shall be responsible for installation of chlorine taps at the terminal points of all lines, including all dead end lines Taps may also be required on high points to vent trapped air. Tap location and placement shall be coordinated and observed by the City of Bend. With Inspector approval, fire hydrants may be used as a chlorination injection point.

Before chlorination, the City Representative shall witness all valves being opened in the system being chlorinated.

The City Representative shall collect all samples for chlorine residual testing as follows:

(1) After chlorination (beginning of test initial value).

(2) Prior to the chlorination solution being flushed at the end of the 24-hour test period (finish value).

(3) After the system has been thoroughly flushed and refilled.

A maximum of 60 parts per million (ppm) and a minimum of 25 ppm of free residual chlorine are the acceptable limits for the initial test. Any residual above or below acceptable initial limits shall be grounds for restarting the chlorination test. If the finished residual value varies by 60% or more than the starting value, the test shall be deemed to have failed and rechlorination shall be required after thoroughly flushing the line.

If after three chlorinations no passing level is obtained, the line shall be deemed contaminated, be removed, and replaced by the Contractor at their expense.

(e) Bacteriological Testing – Comply with AWWA C651.

(f) Pressure Testing – Comply with AWWA C600.

(g) Flow Testing – The Contractor shall flow test all services and hydrants for a minimum of 2 minutes prior to acceptance of the system by the City. Flow testing equipment shall be checked and approved by the City and the test conducted under direct supervision of the City. Test reports shall provide the following information:

- Hydrant flow in gallons per minute (gpm)
- Hydrant static pressure

- Station of hydrant
- Service line flow in gpm
- Lot and block of service

(h) Other Tests – The City Representative may require other tests, such as volatile organic compounds, inorganic chemicals, or synthetic organic chemicals, if there is reason to believe the line has been contaminated by such compounds. The costs of these tests can be substantial and shall be borne by the Contractor. Failure to pass such other tests shall be grounds to reject the work and cause it to be replaced.

(i) Cleanup – Upon completion of the testing and acceptance of the tests by the City of Bend, the Contractor shall clean the area as directed by the City.

01140.80 Measurement – DELETE in its entirety and REPLACE with the following:

(a) Pipe – Pipe length shall be measured horizontally from centerline to centerline of valves, fittings or to the end of the pipe, whichever is applicable. Measurement of the various depth classes as stated in the Bid Schedule shall be from the pipe invert as constructed to the design subgrade elevation or the finished ground surface at the point of measurement.

(b) Fittings Measurement – Measurement of fittings shall be made on a unit price basis for the type, kind, and size specified and installed. No separate or additional payment shall be made for couplings, joint lubricant, nuts, bolts, washers, and other fitting-related hardware or supplies.

(c) Thrust Blocks – Measurement for thrust blocks shall be made on a unit price basis for each thrust block installed.

(d) Testing and Disinfection – When neither specified nor listed in the proposal for separate payment, flushing, chlorination, and testing shall be considered incidental work for which no separate payment shall be made.

(e) Incidental Basis – Items not listed in the Bid Schedule shall be considered incidental work for which no separate payment shall be made.

Section 01140.90 Payment – ADD after pay item (“(e) ____ Inch Connection…”):

(f) Payment for TRENCH EXCAVATION shall be at the unit price bid per LF at the specified diameter for the depth class as measured. Payment shall include all materials, tools, labor, equipment, bedding, backfill, and incidentals required to

excavate and backfill the trench as specified. There shall be no separate payment for rock excavation unless specifically called for in the Bid Schedule.

When not listed in the Bid Schedule as a separate pay item, TRENCH EXCAVATION shall be considered incidental to the price bid for pipe.

Section 01150 – Potable Water Valves

Comply with Section 01150, Potable Water Valves, of the Standard Specifications, Potable Water Valves modified as follows:

Section 01150.10 Materials – DELETE this subsection and REPLACE to read:

Section 01150.10 Materials

(a) Resilient Seated Epoxy Coated Gate Valves – Buried epoxy-coated iron body gate valves shall meet AWWA standards (C-509), have non-rising stems, be rated at 200 pounds (lb) working pressure and 350 lb hydrostatic pressure, open left – 2-inch-square operating nuts, resilient seat, with brass fittings, "O" ring stem pressure seals, non-directional, mechanical joints with full body glands (AWWA C-110); as manufactured by Mueller, Kennedy, Waterous, CLOW, or American Flow Control, and as approved by the City Engineer..

Aboveground or in-vault gate valves shall be equipped with hand wheels.

(b) Butterfly Valves – Butterfly valves shall meet the requirements of AWWA C-504 latest revision, Class 150-B mechanical joint etc., except worm gear operators are not permitted. To reduce the number of different valves in the system, the Mueller line seal seat in body, or equal, shall be the preferred valve. The valve can be domestic or non-domestic, unless contractually obligated otherwise. Where 18 inches of cover cannot be obtained from operating nut to finish grade, butterfly valves shall be required. Butterfly valves shall be used on all water lines of 10-inch size and larger, or where 24 inches of cover cannot be obtained on smaller mains.

Aboveground or in-vault butterfly valves shall be equipped with hand wheels.

(c) Valve Boxes – Valve boxes shall be an East Jordan Iron Works # 363912 18-inch box rated at 3500 psi. The valve box shall have a 7-inch I.D. with a 12-inch flange on the top, and a lid with raised letters on the top reading: City of Bend, or Bend Water as shown in the Standard Drawings.

The East Jordan Iron Works series #363912 shall have a section of PVC 3034 placed below the 18- inch box with a 6-inch to 12-inch overlap. It shall be cut to the proper length to allow adjustment in the depth of cover.

(d) Check Valves

(1) Swing Check Type – Swing check valves shall be bronze-mounted with cast or ductile iron body with outside lever and spring unless otherwise specified.

(2) Spring Loaded Plug or Disc Type – Spring-loaded plug or disc type check valves shall be bronze-mounted with bronze, cast, or DI body, bronze plug or disc, stainless

steel spring, and resilient seal suitable for clear cold water service. The plug or disc of the check valves shall be easily removed and replaced.

(3) Hydraulic Cushion Type – Hydraulic cushion type check valves shall be of bronze, cast or ductile iron, with bronze disc and disc faces, seat rings, and pivot pins. The valve shall provide drop-tight sealing. The valve shall be provided with an adjustable speed, integrally mounted oil dashpot mechanical snubber system.

(4) Meters – The meter will have no moving parts and constructed of a noncorrosive material. The Meter will utilize an electromagnetic or ultrasonic measurement system. The meter must meet federal low lead requirements and be compliant with American water works Standard C-700, C-710, NSF/ANSI Standard 61 Annex F-G. The meter must be capable of measuring water flow in Cubic Feet and show reverse flow. The meter must operate with a maximum working pressure of 175 psi without leakage, damage or effect on accuracy. A ¾" meter will have an allowable pressure loss not to exceed 7 PSI at 30 GPM. A 1"meter will have an allowable pressure loss of 4 PSI at 30 GPM. The ¾" meter shall guarantee 1.5% accuracy rate at normal operating flows of 3 GPM for the service life of the meter. The 1"meter shall guarantee 1.5% accuracy rate at normal operating flows of 4 GPM for the service life of the meter. The meter will fit within the City of Bend Premises Isolation Program specification. The meter and register must be fully compatible with all ACLARA MTU firmware, factory constructed NICOR ends, Extended Range 2-way transmitting system and the newest available version of ACLARA MTU. The meters must be currently approved with a tested meter type scaling by ACLARA. The meter shall also be 9" lay length for ¾" meters and 11-inch lay length for 1"meters.

(5) Corporation Stop – Corporation stops shall be Mueller #B-25008 full port ball valve, or approved equal.

(6) Meter Stop – Meter stops shall be Mueller #B-24258 ball angle meter valve, or approved equal.

(7) Meter Setters – All 1-1/2" through 2-inch meters shall use a meter setter series # B-2423-99000 with a 12-inch setter height as shown in Standard Drawing ___-___.

(8) Meter Boxes – Meter boxes shall be installed as shown on the Standard Drawings. All boxes shall include a DI reader lid. Meter boxes shall not be installed within a sidewalk or paved area. Meter vaults shall be traffic rated.

Meter boxes approved by the City of Bend Water Division. Refer to Part II Section 2-5, Chapter 5.4.3 Meters.

Construction

Section 01150.40 General – ADD the following subsection(s):

(d) General – Before installation, valves shall be cleaned of all foreign material and inspected in open-closed position. Unless otherwise indicated, gate valves shall be mounted with the stem vertical. Butterfly valves shall be mounted with the stem vertical and on the 'curb' side of the main. Horizontal valves shall be mounted in such a manner that adequate clearance is provided for operation. Installation practices shall conform to the manufacturer's recommendations.

(e) Valve Boxes – A metal valve box shall be provided for every valve unless the valve is located in a vault. The valve box shall not transmit shock or stress to the valve, and shall be centered and plumb over the operating nut of the valve. The box cover shall be flush with the surface of the finished pavement or such level as may be directed by the Inspector.

(f) Meter Installations – Meter installations shall be constructed as shown in the Standard Drawings. When a meter is not installed at time of completion, a jumper spacer set to the dimension of the proposed meter and backflow prevention device shall be installed to provide service. This jumper shall be a galvanized nipple or Schedule 80 polyvinyl chloride (PVC) drilled to prevent flow.

All meter installations shall be constructed with an electric wire jumper of not less than 10 gauge. The material of the electric jumper shall be the same or galvanically compatible with the material of the water service; that is, galvanized wire on galvanized pipe and copper wire on copper pipe.

01150.80 Measurement – ADD following subsection(s):

(a) Backflow Prevention Device – Measurement for backflow prevention devices shall be made on a unit price basis for the type, kind, and size specified.

(b) Meters – Measurement for meters shall be made on a unit price each basis for the type, kind, and size specified.

(c) Incidental Basis – When neither specified nor listed in the proposal for separate payment, valves and meters shall be considered incidental work for which no separate payment shall be made.

01150.90 Payment – ADD following pay item g):

(h) Backflow Prevention Device – Measurement and payment for backflow prevention devices shall be made on a unit price basis for the type, kind, and size specified.

(i) Meters – Measurement and payment for meters shall be made on a unit price basis for the type, kind, and size specified.

(j) Incidental Basis – When neither specified nor listed in the proposal for separate payment, valves and meters shall be considered incidental work for which no separate payment shall be made.

Section 01160 – Hydrants and Appurtenances

Comply with Section 01160, Hydrants and Appurtenances, of the Standard Specifications, Hydrants and Appurtenances, modified as follows:

01160.10 Materials – DELETE in its entirety and REPLACE as follows:

(a) Hydrants –Traffic model fire hydrants shall meet AWWA specification C-502-64 with dry top. They shall have a center stem compression, 5-¼-inch valve opening, (2) 2-½-inch hose and (1) 5-1/4-inch steamer nozzles with National Standard Threads, 6-inch mechanical joint inlet connection, open left (1) 1-½-inch pentagon operating nut, and gaskets in nozzles. The bury line shall be used as control to ensure proper installation of hydrants. At no time shall finish grade be less than 3 inches below the bury line, or higher than the bury line of the hydrant. If a hydrant is not provided with a bury line, the bottom flange of the hydrant shall be used as control and finish grade shall be set at exactly 4 inches below the bottom flange, or as directed by the City's representative. The Muller Super Centurion 250 is the preferred hydrant to be placed in the City's water system. A brass seating ring is required. All hydrants shall be red from the manufacturer at time of installation. Variations of red from different manufacturers is permitted.

(b) Hydrant Extensions – Hydrant extensions shall be allowed on existing Fire Hydrants only. Extensions shall be from the manufacture or approved equal. Maximum of 1 extension per hydrant. Extension height 1 foot maximum. City of Bend Utility Department shall have sole discretion as to when extensions will be used. No extensions allowed on newly installed Fire Hydrants.

(c) Gravel for Drainage – Gravel for drainage under fire hydrants shall be graded river gravel free of organic matter, sand, loam, clay, and other small particles that shall tend to restrict water flow through the gravel.

01160.40 Setting Hydrants – ADD the following after **"(b) Out-of-service hydrants"**:

(c) Location – Hydrants shall be located as shown on the Plans or as directed by the City Engineer. All hydrants shall have two (2) reference points (swing ties) indicating the face of hydrant, tops of curb, and face of curb. The center of the operating nut on the hydrant barrel shall be set 6'-2" from face on curb as shown in the Standard Drawings. Hydrants shall be placed outside the pedestrian path of travel so that pedestrians, including people with disabilities, will have access to sidewalks and pedestrian paths.

Hydrants shall be protected by a 6-foot-by-6-foot concrete pad and bollards if deemed necessary by the City Engineer.

(d) Position – No hydrant should be set within 70 feet of a drywell unless specifically permitted by the City Engineer.

(1) No hydrant shall have more than a 6-foot bury. If deeper use bends to gain appropriate height.

(2) All hydrants shall be installed plumb with their nozzles parallel with or at right angles to the curb with the pumper nozzle facing the curb. Hydrants shall be set to the established grade. All hydrants shall be surrounded by a concrete pad as shown on the Standard Drawings. Hydrant pads shall be placed flush with sidewalks and curbs at 2% grade

(e) Hydrant Drainage – Unless otherwise specified in the Plans or special specifications, hydrant drainage shall be provided at the base of the hydrant by placing a geotech mat against the native earth, and graded river gravel from the bottom of the trench to at least 6 inches above the waste opening in the hydrant and to a distance of 1 foot around the bowl. No drainage system shall be directly connected to a storm or sanitary sewer.

(f) Service – All out-of-service hydrants shall be provided with a white ring with the words “Out of Service” inscribed on it. Disks shall be 8-inch-diameter plastic supplied by the Contractor. Rings shall be affixed to the steamer nozzle immediately after installation and shall remain on hydrant until the hydrant passes inspection and is placed in service.

(g) Hydrant Operation – Following installation, no person shall operate a City of Bend fire hydrant without first obtaining a “City of Bend” hydrant permit.

Measurement

01160.80 Measurement – DELETE in its entirety and REPLACE with the following:

Measurement shall be made on a unit basis for the type of hydrant specified and installed. When not listed in the Bid Schedule for separate payment, fire hydrants shall be considered incidental work for which no separate payment shall be made.

New pipe for hydrant connections to existing mains and lateral tees will be measured according to Section 01140.80.

Section 01170 – Potable Water Service Connections, 2 Inch and Smaller

Comply with Section 01170, Potable Water Service Connections, 2 Inch and Smaller, of the Standard Specifications, with modified as follows:

01170.10 Materials – DELETE in its entirety and REPLACE with the following:

(a) Fittings for copper pipe shall be CC 110 Compression type Mueller or approved equal.

(b) All services shall have 3 feet of cover.

(c) Any services larger than 1 inch shall be attached to the main line using a saddle connection. All 1-½- to 2-inch meters shall use a 2-inch meter setter series # B-2423-99000 as shown in Standard Drawing 4-5.

(d) Bedding and pipe zone material shall be placed at least 7 inches below and 12 inches above all pipes. The material shall be compacted with hand-held compaction equipment to 95 % density as determined by AASHTO T-99, Standard Proctor.

(e) Meter boxes shall be installed at each meter. The box shall be centered on the meter and elevated to existing ground level or proposed finish grade. All box covers shall include a hinged polymer concrete metal impregnated meter inspection lid.

(f) Main corporation and meter stops shall be of a Mueller or approved equal.

(g) Meter box lids shall be set 12 inches behind the sidewalk and 18 inches to 24 inches behind the curb where there is no sidewalk. Meter boxes are to be located between the curb and sidewalk and located outside hard surfaces, where possible.

(h) Service taps on C-900 shall be installed using a Ford S90 or Romac 901 series tapping saddle or equal.

01170.40 General– DELETE in its entirety and REPLACE with the following:

(a) All services shall be flushed of all foreign objects before connecting double check valve.

(b) All services shall be flushed and checked for flow by contractor.

(c) Services installed during water line construction and prior to meter placement shall be constructed with temporary meter jumpers and supplied by the Contractor.

(d) Service runs between the corporation stop and the meter setting shall not contain fittings unless approved by the City Engineer.

(e) Electrical continuity shall be provided on all services as shown in the Standard Drawings.

(f) Existing water services to be abandoned must be cut at the corporation stop and removed from the right-of-way. Corporation stops on services larger than 1 inch shall be removed and replaced with a plug at the water main. Whenever possible the water service line including any fittings and valves shall be physically removed from the right-of-way.

(g) All property that is subject of a site plan, or any new construction that is being served by an inadequate water service, shall be required to upgrade the existing water service to City standards.

(h) Water service meter boxes shall be set with a minimum distance of 18 inches between each water service box and any concrete areas. All water services shall have a minimum of 10 feet horizontal separation from any sanitary sewer in the public right-of-way.

(i) Marking tape shall be installed on all services.

(j) Temporary water use during construction must be metered and shall be protected from backflow using an approved backflow protection device.

ADD subsection(s) as follows:

01170.43 Fire Services – All fire line backflow prevention assemblies, whether Double Check or Reduced Pressure Principle Device, shall include a detector assembly complete with a bypass line with double check or reduced pressure principle device assembly inline and a meter that meets City of Bend specifications.

Backflow assemblies may be installed in the vertical position, provided that the assemblies are
spring-loaded and meet the following criteria:

(a) 4-inch diameter or smaller, and/or specifically listed in the Oregon Health Division's Approved Backflow Prevention Assembly List

(b) Recommended by the manufacturer for vertical installation

(c) Has the normal flow upward

(d) Fire lines shall require backflow protection commensurate with the degree of hazard (per UPC Chapter 6).

01170.44 Backflow Requirements – All services shall have an approved backflow prevention assembly installed commensurate with the degree of hazard for the premises it serves. Backflow prevention shall be in accordance with OAR 333-061-070/UPC

Chapter 6 and conditions set forth in the City of Bend Cross Connection Ordinance. Assembly shall be installed on the Owner's side of meter. If approved by the City of Bend Cross Connection Specialist, and the backflow assembly is a Reduced Pressure Principle Device Assembly, it may be installed immediately inside the building being served. In all cases, the device must be installed upstream of the first branch line leading off the service line. See examples from Drawings _-16, _-16A, _-16B. Such backflow prevention device assembly(s) shall be installed and approved before water service shall be provided.

Double-check valves to be installed at the time the meter is installed.

All backflow prevention device assemblies, once installed, shall be inspected by the City of Bend Cross Connection Inspector or authorized agent. Prior to acceptance and initiation of service, the device shall be tested by an Oregon State Certified backflow tester with the results forwarded to and received by City of Bend Public Works Cross Connection Program.

01170.80 Measurement – DELETE in its entirety and REPLACE with the following:

The quantities of service connections, fire services, and backflow prevention devices will be measured on a unit price basis.

Payment

01170.90 Payment – ADD the following payment items:

(d) Fire Services …….. Each
(e) Backflow Prevention Devices…… Each

TABLE OF CONTENTS

PART 02000 – MATERIALS
(Concrete Materials and Additives)

Wood Products

Section 02110 – Posts, Blocks, and Braces

Section 02140 – Glued Laminated Timber Members

Section 02150 – Lumber and Timber Connectors

Section 02190 – Preservative Treatment of Timber

Coatings

Section 02210 – Coating Materials for Timber and Concrete

Drainage and Water Distribution Materials

Section 02450 – Manhole and Inlet Materials

Aggregates

Section 02630 – Base Aggregate

Railing and Guidance Devices

Section 02830 – Handrail

Illumination and Traffic Control Materials

Section 02910 – Sign Materials

Section 02920 – Common Electrical Materials

Section 02925 – Traffic Signal Materials

Wood Products

Section 02110 – Posts, Blocks, and Braces

Comply with Section 02110 of the Standard Specifications modified as follows:

02110.40(a) Grading – REPLACE chart with the following:

Species	**4" x 4"**	**4" x 6"**	**6" x 6" and Larger**
Douglas Fir	124-c WCLIB 42.12 WWPA	123-c WCLIB 62.12 WWPA	131-cc WCLIB 80.12 WWPA
Hem-Fir	124-c WCLIB 42.12 WWPA	123-c WCLIB 62.12 WWPA	(not allowed) (not allowed)

Section 02450 – Manhole and Inlet Materials

Comply with Section 02450 of the Standard Specifications modified as follows:

02450.30 Metal Frames, Covers, Grates, and Ladders – REPLACE "Inlet frames and grates" under the Projects on State Highways requirements with the following:

Inlet frames and grates	M 306	Class 35 B
	M 227 (A 663)	65
	M 270 (A 709) A 36	36
	M 103 (A 27)	65 - 35

Section 02630 – Base Aggregate

Comply with Section 02630 of the Standard Specifications modified as follows:

02630.10(a) Grading – ADD the following "sieve size" in Table 02630-01 above "No. 10" and add the following footnote at the end of the table:

No. 4 *	–	–	–	–	–

* Report percent passing sieve when no grading requirements are listed

DELETE Section 02830 in its entirety and REPLACE with the following:

Section 02830 – Handrail

Description

02830.00 Scope – REPLACE with the following:

This Section includes the requirements for the steel in handrail for stairways and pedestrian facilities.

02830.10 Shapes, Plates, and Bars – Punch anchor plate bolt holes at the locations shown before fabrication.

02830.20 Steel Pipe – Steel pipe shall conform to ASTM A 500, seamless, Grade B.

02830.21 Steel Tube – Steel tube shall conform to ASTM A 500, seamless, Grade B.

02830.22 Fasteners – Fasteners shall meet the requirements of Section 02560. Machine screws shall be SAE 18-8 stainless steel.

02830.30 Galvanizing – Hot-dip galvanize all handrail components according to AASHTO M 111 (ASTM A 123) after shop fabrication.

02830.31 Repair of Hot-Dip Galvanizing – Repair damaged hot-dip galvanizing according to ASTM A 780 and ASTM A 123. Minimum zinc content for Method A2 is 94% on the dry film.

02830.40 Incidentals – Plates, caps, and miscellaneous pieces necessary to complete the rail shall be as shown.

02830.50 Acceptance – Acceptance of handrail materials will be according to 00165.35 and this Section.

Illumination and Traffic Control Materials

Section 02910 – Sign Materials

Comply with Section 02910 of the Standard Specifications modified as follows:

02910.02 Types of Signs – REPLACE the "W9" sign type with the following:

Silver-white Type III or Type IV sheeting background with blue nonreflective screened or cut-out permanent legend.

02910.75 Manufacturer's Warranty – REPLACE the paragraph that begins ("The Agency will date all…" with the following:

The Agency will date all approved signs at project completion. That date is the start of the Warranty period.

Section 02920 – Common Electrical Materials

(Follow all instructions. If there are no instructions above a subsection, paragraph, sentence, or bullet, then include them in the project but make necessary modifications to only include project specific specifications. Delete specifications that do not apply to the project.)

Comply with Section 02920 of the Standard Specifications modified as follows:

02920.22 Cable – ADD the following sentence to the end of the "Loop Feeder Cable" bullet:

When shown, construct loop feeder circuits of two-conductor No. 18 AWG twisted pair shielded cable with drain wire conforming to IMSA 50-2.

Section 02925 – Traffic Signal Materials

(Follow all instructions. If there are no instructions above a subsection, paragraph, sentence, or bullet, then include them in the project but make necessary modifications to only include project specific specifications. Delete specifications that do not apply to the project.)

Comply with Section 02925 of the Standard Specifications modified as follows:

(Use the following subsection .42 when traffic signal control devices are required. Obtain information from the Signal Designer.)

02925.42 Traffic Signal Control Devices - ADD the following to the end of this subsection:

The following changes are made to the September 2001 Standard Specifications for Microcomputer Signal Controller:

(Use the following Chapter 2 lead in sentence and 2.1.10 on all off-system, local Agency funded or developed projects.)

REPLACE Chapter 2, Section 1, Unit 10 with the following:

(Fill in the blank with CONTRACTOR, COUNTY, CITY, etc. as appropriate.)

2.1.10 The traffic signal control program and PROMS with PROM module for the Model 170E will be furnished by the _____

(Use the following for all signal cabinets.)

3.1.6.1 REPLACE "15 amps" with "10 amps"

(Use the following when auxiliary files are needed in Model 332 cabinets.)

6.1.1.1 ADD the following to the listed items: Auxiliary output file

(Use the following when auxiliary files are needed in Model 334 cabinets.)

6.1.1.2 ADD the following to the listed items: Auxiliary output file

(Use the following if a Model 400 modem is not required in Model 332 or 334 cabinets.)

6.1.1.4 REMOVE "with Model 400 Modem" in the sentence that begins (“The controller unit . . .”)

(Use the following when Model 332 or 334 cabinets are used.)

6.5.2.1 REPLACE the sentence that begins (“All space connectors . . .”) with the following:

All spade connectors on wires connecting to the input panel (terminal blocks TB1 through TB10 and DC ground bus) and/or input files (terminal blocks T1 through T15) shall be crimped and soldered to the wires.

(Use the following when auxiliary files are needed in Model 336s intersection cabinets.)

7.1.1.1 ADD the following to the listed items: Auxiliary output file

(Use the following when auxiliary files are needed in Model 336S ramp meter cabinets.)

7.1.1.2 ADD the following to the listed items: Auxiliary output file

(Use the following if a Model 400 modem is not required in Model 336 or 336S cabinets.)

7.1.1.4 REMOVE "with Model 400 Modem" in the sentence that begins (“The controller unit with . . .”).

(Use the following when Model 336 or 336S cabinets are used.)

7.5.2.1 REPLACE the sentence that begins (“All spade connectors . . .”) with the following:

All spade connectors on wires connecting to the input panel (terminal blocks TB1, TB2, and DC ground bus) and/or input files (terminal blocks T1 through T15) shall be crimped and soldered to the wires.

(Use the following Chapter 8, Section 3 on projects with phone equipped cabinets. Choose either phone line or cellular phone line. Delete the method that does not apply.)

ADD the following new Section to Chapter 8:

SECTION 3 - TELEPHONE EQUIPPED CABINETS

8.3.1 General Requirements

(Use the following 8.3.1.1 and 8.3.1.2 for cellular phone lines.)

8.3.1.1 Provide and install equipment as shown on Standard Drawing TM423, (Telephone equipped cabinet). Use the following amended parts list:

MC 480 installation kit - #FLN3181
Cellular connector - #S1936C
Transceiver- #19024NAASC.

8.3.1.2 Cellular phone shall have local phone number for the "Installed Signal" location.

(Use the following 8.3.1.1 for phone lines (non-cellular).)

8.3.1.1 Data transmission between the controller and the remote control locations shall be by standard dial-up telephone line. Transmission rate shall support a variable transmission rate determined by autosyncing of the modem. The modem shall operate with the controller at any speed or settings the modem establishes with the external source. The remote station shall have a dial-up telephone line at the remote control. Provide one auto-dial/auto-answer external modem (28,000 bps minimum) for the controller.

(Use the following lead-in paragraph and Chapter 9 on projects when 2070L controllers are required.)

ADD the following new Chapter 9:

CHAPTER 9 - MODEL 2070 CONTROLLER UNIT

SECTION 1 - MODEL 2070L CONTROLLER

9.1.1 Unit Chassis

9.1.1.1 The 2070L Controller shall consist of a 2070 Chassis meeting the following requirements:

1. Lite Cage
2. 2070-1B CPU Module
3. 2070-2A C1 Field I/O Connector Module
4. 2070-4A or 4B Power Supply Module
5. 2070-3B 8x40 LCD Display Module

6. 2070-6A 1200 baud Modem Module
7. Two 2Mb Data Key

9.1.2 **Controller and Module**

9.1.2.1 The 2070L Controller and module shall meet the following specifications:

1. Caltrans 2002 TEES
2. TEES Errata 1, October 27, 2003
3. TEES Errata 2. June 8, 2004
4. Caltrans QPL Listed
5. OS-9 Operating System version 3.3 (Ethernet Capable)
6. Controller Boot Code Compatible with NW Signal Voyage Controller Firmware and all included features
7. Tested and approved Boot Codes are:

    a. Econolite - Boot Code 2002 V1.01.08.02b or later
    b. Simens/Eagle - Boot Code OS0 V3.3.0 Operating System 7.0.0.0.0.15 or later
    c. McCain - Boot Code 01.92

(Use the following subsection .51 on projects when new vehicle signals or when new pedestrian signals are required. Check with Signal Designer before using.)

02925.51 Traffic Signal Lamps - ADD the following to the end of this subsection:

Provide the following LED modules:

Vehicle Signals

Indication Color	8 Inch Lens Type	12 Inch Lens Type
Red	LED [1]	LED [1]
Yellow	LED [1]	LED [1]
Green	LED [1]	LED [1]

Pedestrian Signals [2]

Indication Color	Side by Side Type	Countdown Type
Hand	LED [3]	LED [4]
Walking Man	LED [3]	LED [4]
Numbers	–	LED [4]

[1] Flange mount LED modules.

[2] Pedestrian signal LED modules may be a combination of indication in one module or single indication in separate modules.

[3] Side by side LED modules are a combination of indication (both the hand and walking man in one module).

[4] Countdown LED modules are a combination of indication (both the hand and walking man overlaid on the left with numbers on the right in one module).

(Use the following subsections .65(a-1) and .65(a-2) on projects when new pedestrian signals are required. Check with Signal Designer before using.)

02925.65(a)(1) Standard – DELETE in its entirety and REPLACE with the following:

The standard light source shall meet the requirements of 02925.51.

02925.65(a)(2) Count Down - DELETE in its entirety and REPLACE with the following:

The count down shall meet the requirements of 02925.51.

(Use the following lead-in paragraph and subsection .68 on projects when new vehicle signals or new pedestrian signals are required. Check with Signal Designer before using.)

ADD the following subsection:

02925.68 Signal Head Covers - Provide signal head covers that:

- Are yellow prefabricated nylon.
- Completely cover the head, visors, and backplate.
- Include a fine mesh insert for signal testing.
- Have integral elastic bands and clips to secure the covers to the signal.

PART IV

City of Bend
Supplemental Standard
Specifications for Construction

City of Bend Supplemental to the
OREGON STANDARD SPECIFICATIONS FOR CONSTRUCTION

PART 00300 – Roadwork

Section 00333

Section 00333, which is not a Standard Specification, is included in this Project by Special Provision.

Description

00333.00 Scope

This work consists of furnishing and placing aggregate ditch lining at locations shown or directed.

Materials

00333.10 Aggregate Ditch Lining

Provide hard durable rock or gravel with a moisture binder of clay material that provides a tight, erosion-resistant surface meeting the following grading requirements:

Sieve Size Passing	Percentages (By Weight)
6”	100
4”	30-50
2”	20-30
No. 200	15-25

Construction

00333.40 General

Place the aggregate material to the lines and grades established and as shown.

Measurement

00333.80 Measurement

The quantities of aggregate ditch lining will be measured on the area basis of the actual surface area of the wetted perimeter of the lined ditch.

Ditch excavation will be measured according to 00330.80 and 00330.81.

Payment

00333.90 Payment

The accepted quantities of aggregate ditch lining will be paid for at the Contract unit price, per square yard, for the item "Aggregate Ditch Lining".

Payment will be payment in full for furnishing all materials, and for furnishing all equipment, labor, and incidentals necessary to complete the work as specified.

Ditch excavation will be paid for according to 00330.90, 00330.91, and 00330.93.

City of Bend Supplemental to the
OREGON STANDARD SPECIFICATIONS FOR CONSTRUCTION

Section 00645 – Recycled Asphalt Products In Base

Section 00645, which is not a Standard Specification, is included in this Project by Special Provision.

Description

00645.00 Scope

This work consists of hauling recycled asphalt products (RAP) from Agency-provided stockpiles specified in Section 00160 and placing one or more layers of RAP, mixed with water, on a prepared surface to the lines, grades, thicknesses, and cross sections shown or established.

Materials

00645.10 Materials

Furnish RAP of the designated sizes from the stockpiles except discard hardened lumps exceeding 2 inches on any measured face at the stockpile site in a separate new stockpile or reprocess to achieve the desired maximum size limit.

Acceptance of the RAP will be by visual inspection.

00645.12 Limits of Mixture

Provide a mixture of RAP and water having a uniform moisture content sufficient to obtain the required compaction. Water may be introduced in a mixing plant, or on the grade.

00645.15 Quality Control

Provide quality control according to Section 00165.

Equipment

00645.21 Hauling Equipment

Provide RAP hauling vehicles capable of hauling and depositing the RAP material with a minimum of material segregation.

00645.22 Watering and Spreading Equipment

Provide equipment to add water to the RAP and spread to the lines and grades shown or as directed.

00645.23 Compacting Equipment

Provide self-propelled rollers and compactors capable of reversing without backlash and meeting the following requirements:

- A gross static weight of at least 10 tons.
- Adequate to compact to specified density while the RAP is still moist.

Labor

00645.30 Quality Control Personnel

Provide a certified technician in the following field:

- CAT-1

Construction

00645.40 Preparation of Foundation

Provide a firm surface or material on which RAP is to be placed, according to Sections 00320, 00330, 00370, 00380, and 00610 as applicable.

00645.41 Mixing, Hauling, and Placing

Load the RAP into the hauling vehicle without compacting material remaining in the stockpile.

Add water to RAP while mixing to provide moisture content according to 00645.12.

Thoroughly mix the combined RAP and water for as long as necessary to produce a homogeneous mixture. Mix, haul, and place the material by one of the following methods:

(a.) **Stationary Mixing Plant** - Combine materials in a pug mill or rotary mixer.

Deliver and deposit the mixture without delay. Deliver the mixture to the spreading equipment by direct deposit into its receiving device, or by placing in uniform windrows in front of the equipment.

(b.) **Road Mix** - Place materials for each layer, add water, and mix with a motor grader until a homogeneous mixture is achieved.

00645.43 Thickness and Number of Layers

If the required compacted depth of the course exceeds 6 inches, construct it in two or more layers of nearly equal thickness. The maximum compacted thickness of any one layer shall not exceed 6 inches unless approved by the Engineer.

Place each layer in spreads as wide as practical and to the full width of the course before a succeeding layer is placed.

00645.44 Shaping and Compacting

Begin compaction of each layer immediately after the material is spread. Determine optimum roller pattern according to ODOT TM 306 C "Control Strip Method of Compaction". Maintain optimum roller pattern throughout.

Shape and maintain the surface of each layer, during the compaction operations, to produce a uniform texture, and to meet the requirements of 00645.45.

Apply additional water over the materials for proper compaction.

00645.45 Surface Tolerance

The finished surface of the RAP and the surface of each underlying layer shall parallel the established grade and cross section for the finished surface within 5/8 inch.

The finished surface of the compacted RAP, when tested with a 12 foot straightedge, shall not vary from the testing edge by more than 5/8 inch at any point. Furnish and operate the straightedge as directed.

Maintenance

00645.60 Care of the Work - After construction of each layer and completion of RAP course, maintain the layer to specified conditions, and prevent or repair segregation, raveling, or rutting until it is covered with a following layer or until all work is completed.

Measurement

00645.80 Measurement

The quantities of RAP will be measured on the area basis, to the nearest square yard, of recycled asphalt products constructed to the full nominal thickness. In areas and where the thickness is other than the full nominal thickness, the areas will be adjusted by converting it to an equivalent number of square yards at the full nominal thickness on a proportionate volume basis.

Payment

00645.90 Payment

The accepted quantities of RAP will be paid for at the contract unit price, per square yard, for the item "Recycled Asphalt Products in Base, _____ Inches Thick".

The thickness of the RAP will be inserted in the blank.

Payment will be payment in full for hauling and placing the Agency provided materials, and for furnishing all equipment, labor, and incidentals necessary to complete the work as specified.

No separate or additional payment will be made for water used to obtain compaction or in care of the work.

SECTION 00760 – INTERLOCKING CONCRETE PAVERS

Description

00760.00 Scope - This work consists of furnishing and installing masonry unit pavers at locations shown or directed. This work also includes excavating for pavers, preparing subgrade, and furnishing and placing aggregate base and sand laying course beneath concrete pavers.

Materials

00760.10 Unit Paving Material - Furnish pavers and related material meeting the following requirements:

- **Paving Unit Type**- Uni-décor or approved equal
- **Unit Color** - red, black, or red-black Provide sample color for approval
- **Unit Size** - 80mm in streets, driveways, and roadways or 60mm in pedestrian areas
- **Unit Strength** - 8,000 psi with a maximum of 5% absorption (ASTM C 936)
- **Joint Sand** - Fine PCC aggregate conforming to the following:

Sieve Size	ASTM C 144 Natural Sand Percent Passing	ASTM C 144 Manufactured Sand Percent Passing
No. 4 (4.75 mm)	100	100
No. 8 (2.36 mm)	95 to 100	95 to 100
No. 16 (1.18 mm)	70 to 100	70 to 100
No. 30 (0.600 mm)	40 to 75	40 to 100
No. 50 (0.300 mm)	10 to 35	20 to 40
No. 100 (0.150 mm)	2 to 15	10 to 25
No. 200 (0.075 mm)	0 to 1	0 to 10

- **Leveling Bed** - Fine PCC aggregate conforming to 02690.30(h) or Joint Sand
- **Aggregate Base** - 6” thick, 3/4" – 0
- **Weed Control** - Pre-emergent herbicide conforming to 01040.21

Submit proposed equivalent products to the City Inspector for consideration.

00760.20 Salvaged Materials – Pavers salvaged as part of removal work on the Project may be reused in new construction if Engineer determines materials conform requirements of 00760.10. Salvaged materials shall be structurally sound, whole, and free from cracks and chips.

Construction

00760.40 General - Install pavers according to the manufacturer's instructions.

00760.41 Aggregate Base - Place and compact aggregate to 95% density.

00760.42 Sand Base - Place a minimum depth 1 inch leveling bed. Screed to grade and saturate with water to ensure a firm and smooth grade.

00760.43 Weed Control - Apply granular pre-emergent herbicide over the prepared leveling bed according to the manufacturer's instructions.

00760.44 Unit Pavers - Lay out rows so they are straight and parallel to the surrounding lines. Cut pavers with a masonry saw where necessary to fit pattern to edges.

Where new or reinstalled pavers butt up against existing pavers, install whole pavers only. Do not cut pavers to fit where pavers butt up against existing pavers. Make all cuts where pavers butt up against curbs, curb ramps, sidewalks, tree wells, or other similar fixed objects.

00760.45 Joint Sand and Compaction - After placing pavers, sweep joint sand into the joints. Use a vibrating mechanical tamper to compact.

00760.46 Surface Tolerance - Do not deviate the longitudinal and transverse surface grades by more than 1/4 inch in 12 feet. Meet PROWAG requirements for slope and grades in pedestrian areas.

00760.47 Clean Up - Remove excess sand and broken paving material from the site when complete.

Measurement

00760.90 Measurement - The quantities of interlocking pavers will be measured on the area basis.

Payment

00760.95 Payment - The accepted quantities of unit pavers will be paid for at the Contract unit price, per square foot for the item "Interlocking Concrete Pavers".

Payment will be payment in full for furnishing and placing all materials, and for furnishing all equipment, labor, and incidentals necessary to complete the work as specified.

No separate or additional payment will be made for excavation or base preparation.

City of Bend Supplemental to the
OREGON STANDARD SPECIFICATIONS FOR CONSTRUCTION

PART 00900 – PERMANENT TRAFFIC CONTROL AND ILLUMINATION SYSTEMS

Section 00902, which is not a Standard Specification, is included in this Project by Special Provision.

Description

00902.00 Scope

This work consists of constructing crosswalk closure barricades as shown.

Materials

00902.10 Materials - Furnish materials meeting the following requirements:

Commercial Grade Concrete	00440
Steel	02530
Signs	00940

Construction

00902.40 General

Construct crosswalk barricades as shown or directed.

Measurement

00902.80 Measurement

The quantities of crosswalk closure barricades will be measured on the unit basis.

Payment

00902.90 Payment

The accepted quantities of work done under this Section will be paid for at the Contract unit price, per each, for the item "Crosswalk Closure Barricades".

Payment will be payment in full for furnishing and placing all materials, and for furnishing all equipment, labor, and incidentals necessary to complete the work as specified.

City of Bend Supplemental to the
OREGON STANDARD SPECIFICATIONS FOR CONSTRUCTION

Section 00937 – Preparing and Coating Metal Sign Structures

Section 00937, which is not a Standard Specification, is included in this Project by Special Provision.

Description

00937.00 Scope - This work consists of preparing and coating metallic sign supports, including single post, multi-post, triangular base, and exit number supports, sign backs, and illumination poles and arms as shown or as directed and according to Section 00594.

Materials

00937.10 Materials - Furnish materials meeting the requirements of Section 00594 and the following:

(a) Manufacturing - Coat galvanized and aluminum surfaces with products from the same manufacturer, which are compatible with one another.

Manufactures producing galvanized and aluminum surface coating products conforming to the above requirements include the following:

Xymax
Rodda Paint
12000 SW Garden Place
Portland, OR 97219
(503) 521-4300

Wasser High-Tech Coatings
8041 S 228th
Kent, WA 98032
(253) 850-2967

Other coating products meeting the above requirements may be used with the approval of the Traffic Engineer.

(b) Coating - The coating for all surfaces to be painted shall consist of one single-component, moisture-cured aliphatic polyurethane.

For galvanized surfaces, provide coatings conforming to the following minimum requirements:

Topcoat - Matte Finish:

Generic type:	Micaceous iron oxide-filled, single-component, moisture-cured, aliphatic polyurethane
Vehicle type:	Moisture-cured aliphatic polyurethane
Volume of solids:	50% minimum
VOC content:	2.8 lb/gal maximum
Finish:	Matte
Pigment	Minimum of 3.0 lb/gal of micaceous iron oxide
Color:	As specified

Topcoat - Semi-Gloss Finish:

Generic type:	Single-component, moisture-cured, aliphatic polyurethane
Vehicle type:	Moisture-cured aliphatic polyurethane
Volume of solids:	60% minimum
VOC content:	2.8 lb/gal maximum
Finish:	Semi-Gloss
Color:	As specified

Construction

00937.40 General - Prepare metal sign supports and apply coatings according to Section 00594 and the following:

(a) New Galvanized Surfaces - Before coating, clean new galvanized surfaces with solvent (SSPC-SP1) followed by either a light brush blast (SSPC-SP7), surface etching with a 7% - 10% hydrochloric acid solution, or a vinyl wash material (designed to prepare galvanized surfaces for coating application) to produce a slightly abraded or etched appearance. Ensure that the surface is free of all debris or material resulting from the surface preparation procedures before painting. Take care that all oil, grease or similar contaminants are removed by the initial solvent cleaning before acid etching. If using abrasive blasting, do not destroy the integrity of the galvanized surface. If using vinyl wash, use material compatible with the applied coating.

(b) Weathered Galvanized Surfaces - Lightly brush-blast (SSPC-SP7) existing weathered galvanized surfaces with a light abrasive to remove loose delaminating surface contaminants, corrosion, and other deleterious material. Perform the abrasive blasting in a manner that will properly clean the surface but not destroy the integrity of the galvanizing. Provide an adequate surface to which the coating system can adhere.

(c) All Surfaces - Remove tears, slivers, and other surface defects, sharp edges, and edges hardened or damaged by flame cutting, shearing, or similar operations. Grind all welds smooth.

Clean all surfaces of material detrimental to the application of the coating system as follows:

(1) Cleaning Methods - Use one or any combination of these cleaning methods:

- high-pressure abrasive blasting
- surface etching with a 7% - 10% hydrochloric acid solution
- vinyl wash compatible with coating
- other means approved by the Engineer

Use methods specified in SSPC-SP1 "Solvent Cleaning", SSPC-SP2 "Hand Tool Cleaning", or SSPC-SP3 "Power Tool Cleaning", as necessary to augment primary cleaning procedures.

(2) Abrasives - Perform blast cleaning using an abrasive of a size which does not destroy the integrity of the galvanized surface, but provides an adequate profile for proper adhesion. Remove all materials detrimental to adhesion of the coating system not removed by solvent cleaning.

Use abrasives having no corrosion products, water, oil, or any other material detrimental to the application and adherence of the coatings. Abrasive cleanliness will be tested using ODOT TM 616. Wet abrasives are allowed if wet abrasive blasting methods are used.

(3) Air - For abrasive blasting or blowing down, use high-pressure air that is free of water, oil, or any other material detrimental to the subsequent application of the coating system. Provide adequate separators and traps. The cleanliness of the air will be tested using ODOT TM 618.

(4) Cleaning Procedures - Perform abrasive blasting operations without damaging partially or entirely completed portions of the work. Do not use blast cleaning adjacent to areas being coated.

Examine the prepared surfaces for corrosion, water, oil, grease, or any other material deposited during cleaning operations. Remove any detrimental material by solvent cleaning and reblast or re-etch if necessary.

(5) Final Preparation - Immediately before coating, ensure that the prepared surface is:

- Blown down with high-pressure air supplemented by brushing if necessary
- Free of all residue
- Acceptable to the Engineer

Measurement

00937.80 Measurement - No measurement of quantities will be made for work done under this Section.

Payment

00937.90 Payment - No separate or additional payment will be made for work done under this Section. Payment will be included in payment made for the appropriate sign support items.

SECTION 02220

PAINTING AND COATING

DESCRIPTION

1.01 SCOPE

A. This section includes the requirements for paint and coatings of metal pipes and other related surfaces

1.02 REFERENCES

A. The following is a list of standards which may be referenced in this section:

1. American Water Works Association (AWWA):

   a. C209, Cold-Applied Tape Coatings for the Exterior of Special Sections, Connections, and Fittings for Steel Water Pipelines.
   b. C213, Fusion-Bonded Epoxy Coating for the Interior and Exterior of Steel Water Pipelines.
   c. C214, Tape Coating Systems for the Exterior of Steel Water Pipelines.

2. Environmental Protection Agency (EPA).
3. NACE International (NACE): RP0188, Discontinuity (Holiday)
4. Testing of New Protective Coatings on Conductive Substrates.
5. NSF International (NSF): 61, Drinking Water System Components - Health Effects.
6. Occupational Safety and Health Act (OSHA).
7. The Society for Protective Coatings (SSPC):

   a. Surface Preparation Standards:

      1) SP 1, Solvent Cleaning.
      2) SP 2, Hand Tool Cleaning.
      3) SP 3, Power Tool Cleaning.
      4) SP 5, White Metal Blast Cleaning.
      5) SP 6, Commercial Blast Cleaning.
      6) SP 7, Joint Surface Preparation Standard Brush-Off Blast Cleaning.
      7) SP 10, Near-White Blast Cleaning.
      8) SP 11, Power Tool Cleaning to Bare Metal.

9) SP 12, Surface Preparation and Cleaning of Metals Waterjetting Prior to Recoating.
10) SP 13, Surface Preparation of Concrete.

b. Paint Application Guides:

1) PA 1, Shop, Field, and Maintenance Painting of Steel.
2) PA 2, Measurement of Dry Coating Thickness with Magnetic Gages.
3) PA Guide 3, A Guide to Safety in Paint Application.

c. Technology Guide: Guide 6, Guide for Containing Debris Generated During Paint Removal Operations.

1.03 DEFINITIONS

A. Terms used in this section:

1. Coverage: Total minimum dry film thickness in mils or square feet per gallon.
2. FRP: Fiberglass Reinforced Plastic.
3. HCl: Hydrochloric Acid.
4. MDFT: Minimum Dry Film Thickness, mils.
5. MDFTPC: Minimum Dry Film Thickness per Coat, mils.
8. Mil: Thousandth of an inch.
9. PDS: Product Data Sheet.
10. PSDS: Paint System Data Sheet.
11. PVC: Polyvinyl Chloride.
12. SFPG: Square Feet per Gallon.
13. SFPGPC: Square Feet per Gallon per Coat.
14. SP: Surface Preparation.

1.04 SUBMITTALS

A. Action Submittals:

1. Shop Drawings:
   a. Data Sheets:
      1) For each product, furnish a Product Data Sheet (PDS), the manufacturer’s technical data sheets, and paint colors available (where applicable). The PDS form is appended to the end of this section.
      2) For each paint system, furnish a Paint System Data Sheet (PSDS). The PSDS form is appended to the end of this section.
      3) Technical and performance information that demonstrates compliance with Specification.

4) Furnish copies of paint system submittals to the coating applicator.
5) Indiscriminate submittal of only manufacturer's literature is not acceptable.

b. Detailed chemical and gradation analysis for each proposed abrasive material.

2. Samples:
   a. Proposed Abrasive Materials: Minimum 0.5-pound sample for each type.
   b. Reference Panel:
      1) Surface Preparation:
         a) Prior to start of surface preparation, furnish a 4-inch by 4-inch steel panel for each grade of sandblast specified herein, prepared to specified requirements.
         b) Provide panel representative of the steel used; prevent deterioration of surface quality.
         c) Panel to be reference source for inspection upon approval by Engineer.
      2) Paint:
         a) Unless otherwise specified, before painting work is started, prepare minimum 8-inch by 10-inch sample with type of paint and application specified on similar substrate to which paint is to be applied.
         b) Furnish additional samples as required until colors, finishes, and textures are approved.
         c) Approved samples to be the quality standard for final finishes.

B. Informational Submittals:

1. Applicator's Qualification: List of references substantiating experience.
2. Factory Applied Coatings: Manufacturer's certification stating factory applied coating system meets or exceeds requirements specified.
3. Manufacturer's written verification that submitted material is suitable for the intended use.
4. If the manufacturer of finish coating differs from that of shop primer, provide finish coating manufacturer's written confirmation that materials are compatible.
5. Manufacturer's written instructions and special details for applying each type of paint.

1.0A5 QUALITY ASSURANCE

A. Applicator Qualifications: Minimum 5 years' experience in application of specified products.

B. Regulatory Requirements:

1. Meet federal, state, and local requirements limiting the emission of volatile organic compounds and for the protection of water quality.
2. Perform surface preparation and painting in accordance with recommendations of the following:
   a. Paint manufacturer's instructions.
   b. SSPC PA 3, Guide to Safety in Paint Applications.
   c. Federal, state, and local agencies having jurisdiction.

C. Mockup:

1. Before proceeding with Work under this section, finish one complete space or item of each color scheme required showing selected colors, finish texture, materials, quality of work, and special details.
2. After Engineer approval, sample spaces or items shall serve as a standard for similar work throughout the Project.

1.06 DELIVERY, STORAGE, AND HANDLING

A. Shipping:

1. Where precoated items are to be shipped to the Site, protect coating from damage. Batten coated items to prevent abrasion.
2. Protect shop painted surfaces during shipment and handling by suitable provisions including padding, blocking, and use of canvas or nylon slings.

B. Storage:

1. Store products in a protected area that is heated or cooled to maintain temperatures within the range recommended by paint manufacturer.
2. Primed surfaces shall not be exposed to weather for more than 2 months before being topcoated, or less time if recommended by coating manufacturer.

1.07 PROJECT CONDITIONS

A. Environmental Requirements:

1. Do not apply paint in temperatures or moisture conditions outside of manufacturer's recommended maximum or minimum allowable.
2. Do not perform final abrasive blast cleaning whenever relative humidity exceeds 85 percent, or whenever surface temperature is less than 5 degrees F above dew point of ambient air.

B. Status of Existing Paints and Coatings: Information regarding the status of the existing paints and coatings will be made available by the Agency.

MATERIALS

2.01 MANUFACTURERS

A. Nationally recognized manufacturers of paints and protective coatings who are regularly engaged in the production of such materials for essentially identical service conditions.

B. Minimum of 5 years' verifiable experience in manufacture of specified product.

C. Each of the following manufacturers is capable of supplying most of the products specified herein.

D. Coatings Manufacturers Code A (Able to furnish most heavy-duty industrial coatings and architectural paints):

1. Carboline Coatings, St. Louis, MO.
2. ICI Devoe Coatings, Louisville, KY.
3. Tnemec Company, Kansas City, MO.
4. Sherwin Williams, Cleveland, OH .

E. Paint Manufacturers Code B (Able to furnish most architectural and institutional paints):

1. Benjamin Moore Paints, Montvale, NJ.
2. Miller Paints, Portland, OR.
3. Pittsburgh Paints, Pittsburgh, PA.
4. Rodda Paints, Portland, OR.
5. Sherwin Williams, Cleveland, OH.

2.02 ABRASIVE MATERIALS

A. Select abrasive type and size to produce surface profile that meets coating manufacturer's recommendations for specific primer and coating system to be applied.

2.03 PAINT MATERIALS

A. General:

1. Manufacturer's highest quality products suitable for intended service.
2. Compatibility: Only compatible materials from a single manufacturer shall be used in the Work. Particular attention shall be directed to compatibility of primers and finish coats.

3. Thinners, Cleaners, Driers, and Other Additives: As recommended by coating manufacturer.

B. Products:

Product	Definition	Manufacturer Code
Acrylic Latex	Single-component, finish as required	B
Acrylic Latex (Flat)	Flat latex	B
Acrylic Sealer	Clear acrylic	B
Alkyd (Semigloss)	Semigloss alkyd	B
Alkyd Enamel	Optimum quality, gloss or semigloss finish as required, medium long oil	B
Alkyd Wood Primer	Flat alkyd	B
Bituminous Paint	Single-component, coal-tar pitch based	A
Block Filler	Primer-sealer designed for rough masonry surfaces, 100% acrylic emulsion	A,B
Coal-Tar Epoxy	Amine, polyamide, or phenolic epoxy type 70% volume solids minimum, suitable for immersion service	A
Epoxy Filler/Surfacer	100% solids epoxy trowel grade filler and surfacer, nonshrinking, suitable for application to concrete and masonry. Approved for potable water contact and conforming to NSF 61, where required	A
Epoxy, High Solids	Polyamidoamine epoxy, 80% volume solids, minimum, suitable for immersion service	A
Epoxy Nonskid (Aggregated)	Polyamidoamine or amine converted epoxies aggregated; aggregate may be packaged separately	A

Product	Definition	Manufacturer Code
Epoxy Primer—Ferrous Metal	Anticorrosive, converted epoxy primer containing rust-inhibitive pigments	A
Epoxy Primer—Other	Epoxy primer, high-build, as recommended by coating manufacturer for specific galvanized metal, copper, or nonferrous metal alloy to be coated	A
Chemical Resistant Coating	A mixture of liquid resin material, wetting agent, and filler designed to be troweled or sprayed into place to cure to a hard state, suitable for application to concrete and exposure to wastewater and hydrogen sulfide gas; as approved by the City Engineer.	A
Fusion Bonded Coating	100% solids, thermosetting, fusion bonded, dry powder epoxy, suitable for the intended service	A
High Build Epoxy	Polyamidoamine epoxy, minimum 69% volume solids, capability of 4 to 8 MDFT per coat	A
NSF Epoxy	Polyamidoamine epoxy, approved for potable water contact and conforming to NSF 61	A
Polyurethane Enamel	Two-component, aliphatic or acrylic based polyurethane; high gloss finish	A
Rust-Inhibitive Primer	Single-package steel primers with anticorrosive pigment loading	A,B
Stain, Concrete	Acrylic, water repellant, penetrating stain	B
Water Base Epoxy	Two-component, polyamide epoxy emulsion, finish as required	A,B

2.04 MIXING

A. Multiple-Component Coatings:

1. Prepare using each component as packaged by paint manufacturer.
2. No partial batches will be permitted.
3. Do not use multiple-component coatings that have been mixed beyond their pot life.
4. Furnish small quantity kits for touchup painting and for painting other small areas.
5. Mix only components specified and furnished by paint manufacturer.
6. Do not intermix additional components for reasons of color or otherwise, even within the same generic type of coating.

B. Colors: Formulate paints with colorants free of lead, lead compounds, or other materials that might be affected by presence of hydrogen sulfide or other gas likely to be present at Site.

2.05 SHOP FINISHES

A. Shop Blast Cleaning: Reference Paragraph, Shop Coating Requirements.

B. Surface Preparation: Provide Engineer minimum 7 days' advance notice to start of shop surface preparation work and coating application work.

C. Shop Coating Requirements:

1. When required by equipment Specifications, such equipment shall be primed and finish coated in shop by manufacturer and touched up in field with identical material after installation.
2. Where manufacturer's standard coating is not suitable for intended service condition, Engineer may approve use of a tie-coat to be used between manufacturer's standard coating and specified field finish. In such cases, tie-coat shall be surface tolerant epoxy as recommended by manufacturer of specified field finish coat. Coordinate details of equipment manufacturer's standard coating with field coating manufacturer.

D. Pipe:

1. Ductile Iron Pipe:
   a. Use SSPC standards as a guide for desired prepared surface. Follow recommendations of pipe and coating manufacturers for means and methods to achieve SSPC-equivalent surface.

b. The surface preparation and application of the primer shall be performed by pipe manufacturer.
c. For high performance (epoxy) coatings, follow additional recommendations of pipe and coating manufacturers.
d. Prior to blast cleaning, grind smooth surface imperfections, including, but not limited to delaminating metal or oxide layers.

CONSTRUCTION

3.01 GENERAL

A. Provide Engineer minimum 7 days' advance notice to start of field surface preparation work and coating application work.

B. Perform the Work only in presence of Engineer, unless Engineer grants prior approval to perform the Work in Engineer's absence.

C. Schedule inspection of cleaned surfaces and all coats prior to succeeding coat in advance with Engineer.

3.02 EXAMINATION

A. Factory Finished Items:

1. Schedule inspection with Engineer before repairing damaged factory-finished items delivered to Site.
2. Repair abraded or otherwise damaged areas on factory-finished items as recommended by coating manufacturer. Carefully blend repaired areas into original finish. If required to match colors, provide full finish coat in field.

B. Surface Preparation Verification: Inspect and provide substrate surfaces prepared in accordance with these Specifications and printed directions and recommendations of paint manufacturer whose product is to be applied. The more stringent requirements shall apply.

3.03 PROTECTION OF ITEMS NOT TO BE PAINTED

A. Remove, mask, or otherwise protect hardware, lighting fixtures, switchplates, aluminum surfaces, machined surfaces, couplings, shafts, bearings, nameplates on machinery, and other surfaces not specified elsewhere to be painted.

B. Provide drop cloths to prevent paint materials from falling on or marring adjacent surfaces.

C. Protect working parts of mechanical and electrical equipment from damage during surface preparation and painting process.

D. Mask openings in motors to prevent paint and other materials from entering.

E. Protect surfaces adjacent to or downwind of Work area from overspray.

3.04 CONTAINMENT

A. Provide containment where required for control of lead removal or where required to contain dust from surface preparation activities.

B. Meet requirements of SSPC – Guide 6 for containment, as modified below:

1. Design: Reviewed by a structural engineer, licensed in the State of Oregon. Consider load bearing capacity of structure for supporting the containment system.
2. Provide Class 1 containment structure that prevents the spread of blast media, spent chips, corrosion byproducts, and dust.
3. Filter exhaust air with appropriately sized dust collectors.
4. Verify effectiveness using Method A, General Surveillance, Level 2, as described in SSPC – Guide 6.

C. Protect existing, adjacent storm drain system and downstream system by installing catch basin filter inserts in all catch basins in the vicinity of the work. Maintain or replace damaged filters to prevent construction and painting-related debris and material from entering the storm drainage system.

D. Where pressure washing is required to clean and prepare existing painted surfaces and the existing paint contains lead, collect washwater and paint chips that are removed by pressure washing, and dispose washwater and paint chips offsite in accordance with local, state, and federal regulations.

3.05 SURFACE PREPARATION

A. Field Abrasive Blasting:

1. Perform blasting for items and equipment where specified and as required to restore damaged surfaces previously shop or field blasted and primed or coated.
2. Refer to coating systems for degree of abrasive blasting required.
3. Where the specified degree of surface preparation differs from manufacturer’s recommendations, the more stringent shall apply.

B. Metal Surface Preparation:

1. Where indicated, meet requirements of SSPC Specifications summarized below:

a. SP 1, Solvent Cleaning: Removal of visible oil, grease, soil, drawing and cutting compounds, and other soluble contaminants by cleaning with solvent.
b. SP 2, Hand Tool Cleaning: Removal of loose rust, loose mill scale, loose paint, and other loose detrimental foreign matter, using nonpower hand tools.
c. SP 3, Power Tool Cleaning: Removal of loose rust, loose mill scale, loose paint, and other loose detrimental foreign matter, using power-assisted hand tools.
d. SP 5, White Metal Blast Cleaning: Removal of visible oil, grease, dust, dirt, mill scale, rust, coatings, oxides, corrosion products, and other foreign matter by blast cleaning.
e. SP 6, Commercial Blast Cleaning: Removal of visible oil, grease, dust, dirt, mill scale, rust, coatings, oxides, corrosion products, and other foreign matter, except for random staining limited to no more than 33 percent of each unit area of surface which may consist of light shadows, slight streaks, or minor discolorations caused by stains of rust, stains of mill scale, or stains of previously applied coatings.
f. SP 7, Brush-Off Blast Cleaning: Removal of visible rust, oil, grease, soil, dust, loose mill scale, loose rust, and loose coatings. Tightly adherent mill scale, rust, and coating may remain on surface.
g. SP 10, Near-White Blast Cleaning: Removal of visible oil, grease, dust, dirt, mill scale, rust, coatings, oxides, corrosion products, and other foreign matter, except for random staining limited to no more than 5 percent of each unit area of surface which may consist of light shadows, slight streaks, or minor discolorations caused by stains of rust, stains of mill scale, or stains of previously applied coatings.
h. SP 11, Power Tool Cleaning to Bare Metal: Removal of visible oil, grease, dirt, dust, mill scale, rust, paint, oxide, corrosion products, and other foreign matter using power-assisted hand tools capable of producing suitable surface profile. Slight residues of rust and paint may be left in lower portion of pits if original surface is pitted.
i. SP 12, Surface Preparation and Cleaning of Metals by Waterjetting Prior to Recoating: Surface preparation using high-pressure and ultrahigh-pressure water jetting to achieve specified surface cleanliness condition.

Surface cleanliness conditions are defined in SSPC SP 12 and are designated WJ-1 through WJ-4 for visual surface preparation definitions and SC-1 through SC-3 for nonvisual surface preparation definitions.

2. The words “solvent cleaning”, “hand tool cleaning”, “wire brushing”, and “blast cleaning”, or similar words of equal intent in these Specifications or in paint manufacturer’s specification refer to the applicable SSPC Specification.
3. Where OSHA or EPA regulations preclude standard abrasive blast cleaning, wet or vacu-blast methods may be required. Coating manufacturers’ recommendations for wet blast additives and first coat application shall apply.
4. Ductile Iron Pipe Supplied with Asphaltic Varnish Finish: Remove asphaltic varnish finish prior to performing specified surface preparation.
5. Hand tool clean areas that cannot be cleaned by power tool cleaning.
6. Round or chamfer sharp edges and grind smooth burrs, jagged edges, and surface defects.
7. Welds and Adjacent Areas:

    a. Prepare such that there is:

        1) No pitting, undercutting or reverse ridges on weld bead.
        2) No weld spatter on or adjacent to weld or any area to be painted.
        3) No sharp peaks or ridges along weld bead.

    b. Grind embedded pieces of electrode or wire flush with adjacent surface of weld bead.

8. Preblast Cleaning Requirements:

    a. Remove oil, grease, welding fluxes, and other surface contaminants prior to blast cleaning.
    b. Cleaning Methods: Steam, open flame, hot water, or cold water with appropriate detergent additives followed with clean water rinsing.
    c. Clean small isolated areas as above or solvent clean with suitable solvent and clean cloth.

9. Blast Cleaning Requirements:

    a. Type of Equipment and Speed of Travel: Design to obtain specified degree of cleanliness. Minimum surface

preparation is as specified herein and takes precedence over coating manufacturer's recommendations.

b. Select type and size of abrasive to produce surface profile that meets coating manufacturer's recommendations for particular primer to be used.
c. Use only dry blast cleaning methods.
d. Do not reuse abrasive, except for designed recyclable systems.
e. Meet applicable federal, state, and local air pollution and environmental control regulations for blast cleaning, confined space entry (if required), and disposition of spent aggregate and debris.

10. Post-Blast Cleaning and Other Cleaning Requirements:

a. Clean surfaces of dust and residual particles from cleaning operations by dry (no oil or water vapor) air blast cleaning or other method prior to painting. Vacuum clean enclosed areas and other areas where dust settling is a problem and wipe with a tack cloth.
b. Paint surfaces the same day they are blasted. Reblast surfaces that have started to rust before they are painted.

C. Galvanized Metal, Copper, and Nonferrous Metal Alloy Surface Preparation:

1. Remove soil, cement spatter, and other surface dirt with appropriate hand or power tools.
2. Remove oil and grease by wiping or scrubbing surface with suitable solvent, rag, and brush. Use clean solvent and clean rag for final wiping to avoid contaminating surface.
3. Obtain and follow coating manufacturer's recommendations for additional preparation that may be required.

D. Concrete Surface Preparation:

1. Do not begin until 30 days after concrete has been placed.
2. Meet requirements of SSPC SP 13.
3. Remove grease, oil, dirt, salts or other chemicals, loose materials, or other foreign matter by solvent, detergent, or other suitable cleaning methods.
4. Brush-off blast clean to remove loose concrete and laitance, and provide a tooth for binding. Upon approval by Engineer, surface may be cleaned by acid etching method. Approval is subject to producing desired profile equivalent to No. 80 grit flint sandpaper. Acid etching of vertical or overhead surfaces shall not be allowed.
5. Secure coating manufacturer's recommendations for additional preparation, if required, for excessive bug holes exposed after blasting.

6. Unless otherwise required for proper adhesion, ensure surfaces are dry prior to painting.

E. Plastic and FRP Surface Preparation:

1. Hand sand plastic surfaces to be coated with medium grit sandpaper to provide tooth for coating system.
2. Large areas may be power sanded or brush-off blasted, provided sufficient controls are employed so surface is roughened without removing excess material.

F. Masonry Surface Preparation:

1. Complete and cure masonry construction for 14 days or more before starting surface preparation work.
2. Remove oil, grease, dirt, salts or other chemicals, loose materials, or other foreign matter by solvent, detergent washing, or other suitable cleaning methods.
3. Clean masonry surfaces of mortar and grout spillage and other surface deposits using one of the following:

    a. Nonmetallic fiber brushes and commercial muriatic acid followed by rinsing with clean water.
    b. Brush-off blasting.
    c. Water blasting.

4. Do not damage masonry mortar joints or adjacent surfaces.
5. Leave surfaces clean and, unless otherwise required for proper adhesion, dry prior to painting.
6. Masonry Surfaces to be Painted: Uniform texture and free of surface imperfections that would impair intended finished appearance.
7. Masonry Surfaces to be Clear Coated: Free of discolorations and uniform in texture after cleaning.

G. Wood Surface Preparation:

1. Replace damaged wood surfaces or repair in a manner acceptable to Engineer prior to start of surface preparation.
2. Solvent clean (mineral spirits) knots and other resinous areas and coat with shellac or other knot sealer, prior to painting. Remove pitch by scraping and wipe clean with mineral spirits or turpentine prior to applying knot sealer.
3. Round sharp edges by light sanding prior to priming.
4. Filler:

    a. Synthetic-based wood putty approved by paint manufacturer for paint system.

b. For natural finishes, color of wood putty shall match color of finished wood.
c. Fill holes, cracks, and other surface irregularities flush with surrounding surface and sand smooth.
d. Apply putty before or after prime coat, depending on compatibility and putty manufacturer's recommendations.
e. Use cellulose type putty for stained wood surfaces.

5. Ensure surfaces are clean and dry prior to painting.

H. Existing Painted Surfaces to be Repainted Surface Preparation:

1. Detergent wash and freshwater rinse.
2. Clean loose, abraded, or damaged coatings to substrate by hand or power tool, SP 2 or SP 3.
3. Feather surrounding intact coating.
4. Apply one spot coat of specified primer to bare areas, overlapping prepared existing coating.
5. Apply one full finish coat of specified primer to entire surface.
6. If an aged, plural-component material is to be topcoated, contact coating manufacturer for additional surface preparation requirements.
7. For ductile iron pipe with asphaltic varnish finish not specified to be abrasive blasted, apply coat of tar stop prior to application of cosmetic finish coat.
8. Application of Cosmetic Coat:

a. It is assumed that existing coatings have oxidized sufficiently to prevent lifting or peeling when overcoated with paints specified.
b. Check compatibility by application to a small area prior to starting painting.
c. If lifting or other problems occur, request disposition from Engineer.

9. Perform blasting as required to restore damaged surfaces. Materials, equipment, procedures shall meet requirements of SSPC.

3.06 SURFACE CLEANING

A. Brush-off Blast Cleaning:

1. Equipment, procedure, and degree of cleaning shall meet requirements of SSPC SP 7.
2. Abrasive: Either wet or dry blasting sand, grit, or nutshell.
3. Select various surface preparation parameters, such as size and hardness of abrasive, nozzle size, air pressure, and nozzle

distance from surface such that surface is cleaned without pitting, chipping, or other damage.

4. Verify parameter selection by blast cleaning a trial area that will not be exposed to view.
5. Engineer will review acceptable trial blast cleaned area and use area as a representative sample of surface preparation.
6. Repair or replace surface damaged by blast cleaning.

B. Acid Etching:

1. After precleaning, spread the following solution by brush or plastic sprinkling can: One part commercial muriatic acid reduced by two parts water by volume. Adding acid to water in these proportions gives an approximate 10 percent solution of HCl.
2. Application:

    a. Rate: Approximately 2 gallons per 100 square feet.
    b. Work acid solution into surface by hard-bristled brushes or brooms until complete wetting and coverage is obtained.
    c. Acid will react vigorously for a few minutes, during which time brushing shall be continued.
    d. After bubbling subsides (10 minutes), hose down remaining slurry with high pressure clean water.
    e. Rinse immediately to avoid formation on the surface of salts that are difficult to remove.
    f. Thoroughly rinse to remove any residual acid surface condition that may impair adhesion.

3. Ensure surface is completely dry before application of coating.
4. Apply acid etching to obtain a “grit sandpaper” surface profile. If not, repeat treatment.

C. Solvent Cleaning:

1. Consists of removal of foreign matter such as oil, grease, soil, drawing and cutting compounds, and any other surface contaminants by using solvents, emulsions, cleaning compounds, steam cleaning, or similar materials and methods that involve a solvent or cleaning action.
2. Meet requirements of SSPC SP 1.

3.07 APPLICATION

A. General:

1. The intention of these Specifications is for existing and new, interior and exterior wood, masonry, concrete, and metal, and

submerged metal surfaces to be painted, whether specifically mentioned or not, except as specified otherwise. Do not paint exterior concrete surfaces, unless specifically indicated.

2. Extent of Coating (Immersion): Coatings shall be applied to internal vessel and pipe surfaces, nozzle bores, flange gasket sealing surfaces, carbon steel internals, and stainless steel internals, unless otherwise specified.
3. For coatings subject to immersion, obtain full cure for completed system. Consult coatings manufacturer's written instructions for these requirements. Do not immerse coating until completion of curing cycle.
4. Apply coatings in accordance with these Specifications and paint manufacturers' printed recommendations and special details. The more stringent requirements shall apply. Allow sufficient time between coats to assure thorough drying of previously applied paint.
5. Sand wood lightly between coats to achieve required finish.
6. Vacuum clean surfaces free of loose particles. Use tack cloth just prior to applying next coat.
7. Fusion Bonded Coatings Method Application: Electrostatic, fluidized bed, or flocking.
8. Coat units or surfaces to be bolted together or joined closely to structures or to one another prior to assembly or installation.
9. Water-Resistant Gypsum Board: Use only solvent type paints and coatings.
10. On pipelines, terminate coatings along pipe runs to 1 inch inside pipe penetrations.
11. Keep paint materials sealed when not in use.
12. Where more than one coat is applied within a given system, alternate colors to provide a visual reference showing required number of coats have been applied.

B. Galvanized Metal, Copper, and Nonferrous Metal Alloys:

1. Concealed galvanized, copper, and nonferrous metal alloy surfaces (behind building panels or walls) do not require painting, unless specifically indicated herein.
2. Prepare surface and apply primer in accordance with System No. 10 specification.
3. Apply intermediate and finish coats of the coating system appropriate for the exposure.

C. Porous Surfaces, Such As Concrete and Masonry:

1. Filler/Surfacer: Use coating manufacturer's recommended product to fill air holes, bug holes, and other surface voids or defects.
2. Prime Coat: May be thinned to provide maximum penetration and adhesion.

    a. Type and Amount of Thinning: Determined by paint manufacturer and dependent on surface density and type of coating.

3. Surface Specified to Receive Water Base Coating: Damp, but free of running water, just prior to application of coating.

D. Film Thickness and Coverage:

1. Number of Coats:

    a. Minimum required without regard to coating thickness.
    b. Additional coats may be required to obtain minimum required paint thickness, depending on method of application, differences in manufacturers' products, and atmospheric conditions.

2. Application Thickness:
    a. Do not exceed coating manufacturer's recommendations.
    b. Measure using a wet film thickness gauge to ensure proper coating thickness during application.
3. Film Thickness Measurements and Electrical Inspection of Coated Surfaces:
    a. Perform with properly calibrated instruments.
    b. Recoat and repair as necessary for compliance with Specification.
    c. Coats are subject to inspection by Engineer and coating manufacturer's representative.
4. Visually inspect concrete, masonry, nonferrous metal, plastic, and wood surfaces to ensure proper and complete coverage has been attained.
5. Give particular attention to edges, angles, flanges, and other similar areas, where insufficient film thicknesses are likely to be present, and ensure proper millage in these areas.
6. Apply additional coats as required to achieve complete hiding of underlying coats. Hiding shall be so complete that additional coats would not increase the hiding.

3.08 PROTECTIVE COATINGS SYSTEMS AND APPLICATION SCHEDULE

A. Unless otherwise shown or specified, paint surfaces in accordance with the following application schedule. In the event of discrepancies or

omissions in the following, request clarification from Engineer before starting work in question.

B. System No. 1 Submerged Metal—Potable Water:

Surface Prep.	Paint Material	Min. Coats, Cover
SP 5, White Metal Blast Cleaning	NSF Epoxy	3 coats, 3 MDFTPC

C. Use on the following items or areas:

1. Metal surfaces new and existing below a plane 1 foot above the maximum liquid surface; metal surfaces above the maximum liquid surface that are a part of the immersed equipment; surfaces of metallic items, such as wall pipes, pipes, pipe sleeves, access manholes, gate guides and thimbles, and structural steel that are embedded in concrete; and the following specific surfaces:
   a. Interior surfaces of steel piping in contact with potable water.
   b. Any other metal surfaces that are in contact with potable water.

D. System No. 2 Submerged Metal—Domestic Sewage:

Surface Prep.	Paint Material	Min. Coats, Cover
SP 5, White Metal Blast Cleaning	Prime in accordance with manufacturer's recommendations	
	High Build Epoxy	2coats, 16 MDFT

E. Use on the following items or areas:

1. Metal surfaces new and existing below a plane 1 foot above maximum liquid surface, metal surfaces above maximum liquid surface that are a part of immersed equipment, concrete embedded surfaces of metallic items, such as wall pipes, pipes, pipe sleeves, access manholes, gate guides and thimbles, and structural steel, and the following specific surfaces:

   a. Interior surfaces of steel piping conveying wastewater, unless different linings are specified in other sections.
   b. Any other metals in contact with wastewater.

F. System No. 5 Exposed Metal—Mildly Corrosive:

Surface Prep.	Paint Material	Min. Coats, Cover
SP 10, Near-White Blast Cleaning	Epoxy Primer—Ferrous Metal	1 coat, 2.5 MDFT
	Polyurethane Enamel	1 coat, 3 MDFT

1. Use on the following items or areas:

    a. Exposed metal surfaces, new and existing located inside or outside of structures and exposed to weather or in a highly humid atmosphere, such as pipe galleries and similar areas, and the following specific surfaces:

        1) All exposed surfaces of mechanical equipment, including, but not limited to, pipe, valves, pumps, fittings, miscellaneous appurtenances, and structural components associated with equipment.
        2) Use this system on all other exposed metal surfaces unless another paint system is specifically listed for other exposure conditions.

G. System No. 7 Concrete Encased Metal:

Surface Prep.	Paint Material	Min. Coats, Cover
SP 6, Commercial Blast Cleaning	Coal-Tar Epoxy	2 coats, 16 MDFT
	OR	
	High Build Epoxy	2 or 3 coats, 16 MDFT

1. Use on the following items or areas:

    a. Use on concrete encased ferrous metals including wall pipes, pipe sleeves, access manholes, gate guides, and thimbles.

H. System No. 8 Buried Metal—General:

Surface Prep.	Paint Material	Min. Coats, Cover
SP 10, Near-White Blast Cleaning	Coal-Tar Epoxy	2 coats, 16 MDFT

1. For steel pipe and fittings, follow AWWA C209 and AWWA C214.

2. Use on the following items or areas:

a. Buried, belowgrade portions of steel items, except buried stainless steel or ductile iron.

I. System No. 10 Galvanized Metal, Copper, and Nonferrous Metal Alloy Conditioning:

Surface Prep.	Paint Material	Min. Coats, Cover
In accordance with Paragraph Galvanized Metal, Copper, and Nonferrous Metal Alloy Surface Preparation	Epoxy Primer—Other	As recommended by coating manufacturer Remaining coats as required for exposure

1. Use on the following items or areas:

a. Galvanized surfaces requiring painting.
b. After application of System No. 10, apply finish coats as required for exposure.

J. System No. 12 Skid-Resistant—Steel:

Surface Prep.	Paint Material	Min. Coats, Cover
SP 10, Near-White Blast Cleaning	Epoxy Primer—Ferrous Metal	1 coat, 2.5 MDFT
	Epoxy Nonskid (Aggregated)	1 coat, 16 MDFT

1. Use on the following items or areas:

a. Steel surfaces where skid resistance is required.

K. System No. 13 Skid-Resistant—Aluminum and FRP:

Surface Prep.	Paint Material	Min. Coats, Cover

Aluminum: In accordance with Article Galvanized Metal, Copper, and Nonferrous Metal Alloy Surface Preparation -OR- FRP: In accordance with Article Plastic and FRP Surface Preparation	Epoxy Nonskid (Aggregated)	1 coat, 16 MDFT

1. Use on the following items or areas:

    a. Aluminum surfaces where skid resistance is required.

L. System No. 19 Concrete Tank Lining—Domestic Sewage:

Surface Prep.	Paint Material	Min. Coats, Cover
In accordance with Paragraph Concrete Surface Preparation	Manufacturer's recommended Filler/Surfacer	As required to fill voids and level surface
	Chemical Resistant Coating	50 to 70 MDFT

1. Use on the following items or areas:

    a. All concrete surfaces inside wastewater wet wells.

M. System No. 20 Concrete Manhole Coatings:

Surface Prep.	Paint Material	Min. Coats, Cover
In accordance with Paragraph Concrete Surface Preparation	Manufacturer's Recommended Filler/Surfacer	As required to fill voids and level surface
	Chemical Resistant Coating	50 to 70 MDFT

1. Use on the following items or areas:

    a. All interior surfaces of concrete manholes. Seal water leaks and repair damaged concrete in

existing manholes in accordance with the coating manufacturer's recommendations.

N. System No. 21 Skid-Resistant—Concrete:

Surface Prep.	Paint Material	Min. Coats, Cover
In accordance with Paragraph Concrete Surface Preparation	Epoxy Nonskid (Aggregated)	1 coat, 160 SFPG

1. Use on the following items or areas:

    a. Concrete surfaces where skid resistance is required.

O. System No. 25 Exposed FRP, PVC:

Surface Prep.	Paint Material	Min. Coats, Cover
In accordance with Paragraph Plastic and FRP Surface Preparation	Acrylic Latex Semigloss	2 coats, 320 SFPGPC

1. Use on the following items or areas:

    a. All exposed-to-view PVC and CPVC surfaces, and FRP surfaces without integral UV-resistant gel coat.

P. System No. 27 Aluminum and Dissimilar Metal Insulation:

Surface Prep.	Paint Material	Min. Coats, Cover
Solvent Clean (SP 1)	Prime in accordance with manufacturer's recommendations	
	Bituminous Paint	1 coat, 10 MDFT

1. Use on aluminum surfaces embedded or in contact with concrete, and the following items or areas:

    a. Between dissimilar metals.

Q. System No. 29 Fusion Bonded Coating:

Surface Prep.	Paint Material	Min. Coats, Cover
SP 10, Near-White Blast Cleaning	Fusion Bonded Coating 100% Solids Epoxy	1 or 2 coats, 7 MDFT

1. For steel pipe and fittings, meet all requirements of AWWA C213.
2. Use on the following items:

    a. As an optional steel pipe lining material for potable water contact.

3.09 ARCHITECTURAL PAINT SYSTEMS AND APPLICATION SCHEDULE

A. Unless otherwise shown or specified, paint surfaces in accordance with the following application schedule. In the event of discrepancies or omissions in the following, request clarification from Agency before starting work in question.

B. System No. 102 Wood, Semigloss (Interior or Exterior):

Surface Prep.	Paint Material	Min. Coats, Cover
In accordance with Paragraph Wood Surface Preparation	Alkyd Wood Primer	1 coat, 400 SFPG
	Alkyd (Semigloss)	1 coat, 400 SFPG

3. Use on the following items or areas:

    a. Exposed wood.

R. System No. 106 Galvanized Metal:

Surface Prep.	Paint Material	Min. Coats, Cover

Surface Prep.	Paint Material	Min. Coats, Cover
In accordance with Paragraph Galvanized Metal, Copper, and Nonferrous Metal Alloy Surface Preparation	Manufacturer's Recommended Primer	1 coat, as recommended by manufacturer
	Alkyd Enamel (Semigloss)	2 coats, 4 MDFT

1. Use on the following items or areas:

    a. Hollow metal frames and doors.

S. System No. 107 Metal Trim and Structural Steel:

Surface Prep.	Paint Material	Min. Coats, Cover
SP 6, Commercial Blast Cleaning	Rust-Inhibitive Primer	1 coat, 2 MDFT
	Alkyd Enamel (Semigloss)	2 coats, 4 MDFT

1. Use on the following items or areas:

    a. Metal trim and structural steel associated with building construction.

T. System No. 111 Concrete and Masonry, Stain and Seal:

Surface Prep.	Paint Material	Min. Coats, Cover
Concrete: In accordance with Paragraph Concrete Surface Preparation -OR- Masonry: In accordance with Paragraph Masonry Surface Preparation	Stain, Concrete	2 coats, 250 SFPGPC
	Acrylic Sealer	2 coats, 100 SFPGPC

1. Use on the following items or areas:

a. Exposed concrete and masonry.

U. System No. 113 Concrete, Semigloss:

Surface Prep.	Paint Material	Min. Coats, Cover
In accordance with Article Concrete Surface Preparation	Acrylic Latex (Semigloss)	2 coats, 240 SFPGPC

1. Use on the following items or areas:

b. Exposed concrete that requires a specific color.

3.10 COLORS

A. Provide as selected by Agency.

B. Proprietary identification of colors is for identification only. Selected manufacturer may supply matches.

C. Equipment Colors:

1. Equipment includes the machinery or vessel itself plus the structural supports and fasteners and attached electrical conduits.
2. Paint equipment and piping one color as selected.
3. Paint nonsubmerged portions of equipment the same color as the piping it serves, except as itemized below:

a. Dangerous Parts of Equipment and Machinery: OSHA Orange.
b. Fire Protection Equipment and Apparatus: OSHA Red.
c. Radiation Hazards: OSHA Purple.
d. Physical hazards in normal operating area and energy lockout devices, including, but not limited to, electrical disconnects for equipment and equipment isolation valves in air and liquid lines under pressure: OSHA Yellow.

1.11 FIELD QUALITY CONTROL

A. Testing Equipment:

1. Provide magnetic type dry film thickness gauge to test coating thickness specified in mils, as manufactured by Nordson Corp., Anaheim, CA, Mikrotest.

2. Provide low-voltage wet sponge electrical holiday detector to test completed coating systems, 20 mils dry film thickness or less, except zinc primer, high-build elastomeric coatings, and galvanizing, for pinholes, holidays, and discontinuities, as manufactured by Tinker and Rasor, San Gabriel, CA, Model M-1.
3. Provide high-voltage spark tester to test completed coating systems in excess of 20 mils dry film thickness. Unit as recommended by coating manufacturer.

B. Testing:

1. Thickness and Continuity Testing:

a. Measure coating thickness specified in mils with a magnetic type, dry film thickness gauge, in accordance with SSPC PA 2. Check each coat for correct millage. Do not make measurement before a minimum of 8 hours after application of coating.
b. Holiday detect coatings 20 mils thick or less, except zinc primer and galvanizing, with low voltage wet sponge electrical holiday detector in accordance with NACE RP0188.
c. Holiday detect coatings in excess of 20 mils dry with high voltage spark tester as recommended by coating manufacturer and in accordance with NACE RP0188.
d. After repaired and recoated areas have dried sufficiently, retest each repaired area. Final tests may also be conducted by Engineer.

C. Inspection: Leave staging and lighting in place until Engineer has inspected surface or coating. Replace staging removed prior to approval by Engineer. Provide additional staging and lighting as requested by Engineer.

D. Unsatisfactory Application:

1. If item have an improper finish color or insufficient film thickness, clean surface and topcoat with specified paint material to obtain specified color and coverage. Obtain specific surface preparation information from coating manufacturer.
2. Evidence of runs, bridges, shiners, laps, or other imperfections is cause for rejection.
3. Repair defects in accordance with written recommendations of coating manufacturer.

E. Damaged Coatings, Pinholes, and Holidays:

1. Feather edges and repair in accordance with recommendations of paint manufacturer.

2. Hand or power sand visible areas of chipped, peeled, or abraded paint, and feather the edges. Follow with primer and finish coat. Depending on extent of repair and appearance, a finish sanding and topcoat may be required.
3. Apply finish coats, including touchup and damage-repair coats in a manner that will present a uniform texture and color-matched appearance.

3.12 MANUFACTURER'S SERVICES

A. In accordance with Section 01 43 33, Manufacturers' Field Services, coating manufacturer's representative shall be present at Site as follows:

1. On first day of application of any coating system.
2. A minimum of one additional Site inspection visit, for a minimum of 2 hours.
3. As required to resolve field problems attributable to or associated with manufacturer's product.
4. To verify full cure of coating prior to coated surfaces being placed into immersion service.

3.13 CLEANUP

A. Place cloths and waste that might constitute a fire hazard in closed metal containers or destroy at end of each day.

B. Collect all residual from surface preparation activities, including but not limited to, paint chips and spent abrasive. Dispose in accordance with local regulations. Residual that includes lead or other regulated wastes, such as paint stripping materials and saturated rags, shall be handled, packaged, shipped and disposed of in accordance with local, state, and federal regulations.

C. Upon completion of the Work, remove staging, scaffolding, and containers from Site or destroy in a legal manner.

D. Remove paint spots, oil, or stains upon adjacent surfaces and floors and leave entire job clean.

3.14 SUPPLEMENTS

A. The supplements listed below, following "End of Section," are a part of this Specification:

1. Paint System Data Sheet.
2. Paint Product Data Sheet.

END OF SECTION

PAINT SYSTEM DATA SHEET

Complete this PSDS for each coating system, include all components of the system (surface preparation, primer, intermediate coats, and finish coats). Include all components of a given coating system on a single PSDS.

Paint System Number (from Spec.):		
Paint System Title (from Spec.):		
Coating Supplier:		
Representative:		
Surface Preparation:		
Paint Material (Generic)	**Product Name/Number (Proprietary)**	**Min. Coats, Coverage**

PAINT PRODUCT DATA SHEET

Complete and attach manufacturer's Technical Data Sheet to this PPDS for each product submitted. Provide manufacturer's recommendations for the following parameters at temperature (F)/relative humidity:

Product Name: _____

Temperature/RH	50/50	70/30	90/25
Induction Time			
Pot Life			
Shelf Life			
Drying Time			
Curing Time			
Min. Recoat Time			
Max. Recoat Time			

Provide manufacturer's recommendations for the following:

Mixing Ratio: _____

Maximum Permissible Thinning: _____

Ambient Temperature Limitations: min.: _____ max.: _____

Surface Temperature Limitations: min.: _____ max.: _____

Surface Profile Requirements: min.: _____ max.: _____

Attach additional sheets detailing manufacturer's recommended storage requirements and holiday testing procedures.

SECTION 02230

STEEL TANK COATINGS
DESCRIPTION

1.01 SCOPE

A. This section includes the work necessary to paint the interior and exterior of steel water storage tanks and associated piping.

1.02 REFERENCES

A. The following is a list of standards which may be referenced in this section:

1. NACE International: RP0188, Discontinuity (Holiday) Testing of New Protective Coatings on Conductive Substrates.
2. NSF International (NSF): 61, Drinking Water System Components - Health Effects.
3. Society for Protective Coatings (SSPC):
   a. Surface Preparation Standards:
      1) SP 1, Solvent Cleaning.
      2) SP 2, Hand Tool Cleaning.
      3) SP 3, Power Tool Cleaning.
      4) SP 5, White Metal Blast Cleaning.
      5) SP 7, Brush-Off Blast Cleaning.
      6) SP 10, Near White Blast Cleaning.
      7) SP 11, Power Tool Cleaning to Bare Metal.
      8) SP 12, Surface Preparation and Cleaning of Metals by Water jetting Prior to Recoating.
   b. Paint Application Guides:
      1) PA 1, Shop, Field, and Maintenance Painting of Steel.
      2) PA 2, Measurement of Dry Coating Thickness with Magnetic Gages.
      3) PA Guide 3, A Guide to Safety in Paint Application.
   c. Technology Guide: Guide 6, Guide for Containing Debris Generated During Paint Removal Operations.

1.03 DEFINITIONS

A. Terms used in this section:

1. Coverage: Total minimum dry film thickness in mils, or square feet per gallon.
2. MDFT: Minimum Dry Film Thickness, mils.
3. MDFTPC: Minimum Dry Film Thickness per Coat, mils.
4. Mil: Thousandth of an inch.
5. PPDS: Paint Product Data Sheet.

6. PSDS: Paint System Data Sheet.
7. SC: Stripe coat.
8. SP: Surface preparation.
9. VOC: Volatile Organic Compounds.

1.04 SUBMITTALS

A. Action Submittals:

1. Data Sheets:
   a. For each paint system used, furnish a Paint System Data Sheet (PSDS), Paint Product Data Sheet (PPDS), and paint colors available (where applicable) for each product used in paint system. The PSDS and PPDS forms are appended to the end of this section.
   b. Submit required information on a system-by-system basis.
   c. Provide copies of paint system submittals to coating applicator.
   d. Also provide copies of paint system submittals to the coating applicator.
   e. Indiscriminate submittal of manufacturer's literature only is not acceptable.
2. Detailed chemical and gradation analysis for each proposed abrasive material.
3. Samples:
   a. For each paint system used, furnish colors available (where applicable) for each product used in paint system.
   b. Proposed Abrasive Materials: Minimum 1/2-pound Sample for each type proposed.
4. Test Equipment: Manufacturer data.

B. Informational Submittals:

1. Coating manufacturer's Certificate of Compliance, in accordance with Section 01 43 33, Manufacturers' Field Services.
2. Current NSF certification for potable water contact, where applicable.
3. Anticipated tank coating sequence.
4. Dehumidification plan, including equipment and air change rates. Submit plan based on type of equipment used, length of time required to hold blast, reservoir volume, and time of year that coating work is undertaken.
5. Applicator's Qualification: List of references substantiating experience.
6. Independent structural Engineer review of proposed tank containment system.

7. When self-contained blast cleaning equipment using recycled abrasives is proposed, submit the following:
   a. List of at least three successful projects within past 3 years where equipment and procedures have been used on steel tank of similar size and dimensions.
   b. Provide tank agency's name and telephone numbers.
   c. Description of proposed equipment, procedures, and abrasive blast mix to be used.
8. Field Testing: Daily inspection and test reports.
9. Guarantee Bond and Repair Guarantee Bond.

C. Quality Control Submittals:

1. Shop and field applicator's quality control program, including, but not limited to:
   a. Environmental test methods and frequency.
   b. Steel surface temperature and profile measurement procedure and frequency.
   c. Recordkeeping form.
2. Manufacturer's written instructions for applying each type of coating.
3. Field Testing: Daily inspection and test reports.
   a. Submit all daily and special inspection and test reports in bound form at the completion of the coating work.

1.05 QUALITY ASSURANCE

A. Applicator Qualifications: Minimum 5 years' experience in application of specified products.

B. Regulatory Requirements: Meet federal, state, and local agencies having jurisdiction for Site and types of work activities included in Project, including, but not limited to:

1. Limitations on emission of volatile organic compounds, dust, and other contaminants.
2. Requirements for disturbance, handling, and disposal of paint waste and associated debris, including lead, coal tar, abrasive, and other regulated substances.

C. Industry Best Practices:

1. Perform surface preparation and painting in accordance with recommendations of the following:
   a. Paint manufacturer's instructions.
   b. SSPC–PA Guide 3.

2. Do not apply paint in temperatures outside of manufacturer's recommended maximum or minimum allowable, in dust, in smoke-laden atmosphere, in damp or humid weather.
3. Do not perform abrasive blast cleaning whenever relative humidity exceeds 85 percent or whenever surface temperature is less than 5 degrees F above dewpoint of ambient air.

D. Mockup:

1. Before proceeding with Work under this section, finish one complete space or item of each color scheme required showing selected colors, finish texture, materials, quality of work, and special details.
2. After approval, sample spaces or items shall serve as a standard for similar work throughout the Project.

E. Preinstallation Meeting:

1. Prior to beginning painting Work, schedule a meeting and be prepared to discuss the following subjects, as a minimum:
    a. Required schedule.
    b. Sequence of critical path work items.
    c. Use of Site, access, office and storage areas, security, and temporary facilities.
    d. Major product delivery and priorities.
    e. Safety plan.
2. Attendees shall include:
    a. Agency's representatives.
    b. Contractor's office representative.
    c. Contractor's resident superintendent.
    d. Contractor's quality control representative.
    e. Subcontractors' representatives whom Contractor may desire or Engineer may request to attend.
    f. Engineer's representative.
    g. Paint manufacturer's technical representative.
    h. Others as appropriate.

F. Independent Coatings Inspector: The Agency, at its own discretion, may retain the services of a NACE certified coating inspector. The presence of the coating inspector will be to verify that surfaces are prepared and coatings are applied in accordance with specifications. The presence of a coating inspector will not relieve the Contractor of the responsibility to provide internal quality assurance/quality control measures.

1.06 DELIVERY, STORAGE, AND HANDLING

A. Shipping:

1. Protect precoated items from damage. Batten coated items to prevent abrasion.
2. Use nonmetallic or padded slings and straps in handling.

B. Deliver materials to Site in unopened containers labeled with designated name, date of manufacture, color, and manufacturer.

C. Store paints in a protected area that is heated or cooled as required to maintain temperatures within range recommended by paint manufacturer.

1.07 SPECIAL GUARANTEE

A. Special guarantee shall provide for correction, or at the option of Agency, removal and replacement of Work specified in this Specification section found defective during a period of 2 years after date of Substantial Completion.

B. Provide a surety bond in the full amount of the painting contract price that guarantees the performance of the work. The bond shall cover a period of two years after acceptance from the Agency. The performance bond shall be furnished by a corporate surety company authorized to do business in the State of Oregon, acceptable to the Agency, and subject to the approval of the attorney as to form.

C. Duties and obligations for correction or removal and replacement of defective Work as specified in General Conditions.

1. 24-Month Warranty Period Inspection: Agency will conduct inspection of interior and exterior coated surfaces prior to the end of warranty period. Agency will notify Contractor in advance of inspection and Contractor may attend at its option. Agency will prepare list of coating defects and failures identified during inspection and transmit to Contractor. List shall serve as notice of repairs required under warranty.
2. Repairs:
    a. If repairs are required, requirements of Contract shall apply including, but not limited to, requirements to remove standing water in tanks, perform repair work, and tank cleaning prior to disinfection.
    b. Repair defective coatings using coating materials, equipment, and methods similar to those used in original work. Materials shall be of fresh manufacture and within manufacturer’s stated shelf life at time of application.

c. Provide extended warranty of 1 year for repairs.
d. Provide separate bond for 1-year repair warranty period.
e. Complete repairs within 30 calendar days of Warranty Period Inspection.

1.08 EXISTING COATING STATUS

A. Information regarding the status of the existing coating will be made available by the Agency.

MATERIALS

2.01 2230.10MANUFACTURERS

A. Materials, equipment, and accessories specified in this section shall be products of:

1. Carboline Coatings Company, St. Louis, MO.
2. ICI Devoe, Louisville, KY.
3. International Protective Coatings, Houston, TX.
4. Sherwin-Williams, Cleveland, OH.
5. Tnemec Coatings, Kansas City, MO.

2.02 MATERIALS

A. Quality: Manufacturer's highest quality products and suitable for intended use.

B. Materials Including Primer and Finish Coats: Produced by same paint manufacturer.

C. Thinners, Cleaners, Driers, and Other Additives: As recommended by paint manufacturer of the particular coating.

D. NSF Epoxy: Polyamidoamine or phenalkamine cured epoxy coatings approved for potable water contact and conforming to NSF 61.

E. Epoxy Primer: Two-component, polyamidoamine, phenalkamine, or polyamide cured epoxy, capable of 4-mil to 6-mil dry film thickness, and compatible with specified finish.

F. Surface Tolerant Epoxy Primer: Two-component, polyamide or polyamidoamine cured epoxy, compatible with existing tank coating and suitable for topcoating with polyurethane enamel.

G. Polyurethane Enamel: Two-component, aliphatic or acrylic based polyurethane; semi-gloss finish.

H. Flexible Polyurethane: Modified polyurethane flexible lining membrane, approved for potable water contact conforming to NSF 61 and compatible with the NSF epoxy.

I. Caulking: Two-component polyurethane caulk, suitable for potable water contact conforming to NSF 61 and compatible with the NSF Epoxy.

2.03 COLORS

A. Formulate with colorants free of lead and lead compounds.

B. Furnish as selected by Agency.

C. Proprietary identification of colors is for identification only. Selected manufacturer may supply matches.

2.04 MIXING

A. Multiple-Component Coatings:

1. Prepare using contents of container for each component as packaged by paint manufacturer.
2. No partial batches will be permitted.
3. Do not use multiple-component coatings that have been mixed beyond their pot life.
4. Furnish small quantity kits for touchup painting and for painting other small areas.
5. Mix only components specified and furnished by paint manufacturer.
6. Do not intermix additional components for reasons of color or otherwise, even within the same generic type of coating.

B. Keep paint material containers sealed when not in use.

2.05 ABRASIVES

A. Select abrasive type and size to produce a surface profile that meets coating manufacturer's recommendations for specific primer and coating system to be applied.

B. Select abrasives that conform to federal and state regulations for metals and toxicity.

2.06 SOURCE QUALITY CONTROL

A. Prime coat structural steel surfaces.

B. Notify Engineer at least 7 days prior to start of shop blast cleaning to allow for inspection of the Work during surface preparation and shop application of paints. Work shall be subject to Engineer's approval before shipment to Site.

CONSTRUCTION

3.01 2230.30 GENERAL

A. Surface Preparation and Coating Application: Meet or exceed requirements of these Specifications and SSPC–PA 1, whichever is more stringent.

B. Inspect and provide substrate surfaces prepared in accordance with these Specifications and printed directions and recommendations of paint manufacturer whose product is to be applied.

C. Paint new and existing interior and exterior exposed metal surfaces whether specifically mentioned or not, except as modified herein.

D. Provide Engineer a minimum of 7 days' advanced notice prior to start of surface preparation work or coating application work. Perform such work only in the presence of Engineer, unless Engineer grants prior approval to perform such work in Engineer's absence.

E. Schedule inspection with Engineer in advance for cleaned surfaces and coats prior to succeeding coat.

F. Do not apply paint in temperatures outside of manufacturer's recommended maximum or minimum allowable, or in dust, smoke-laden atmosphere, damp or humid weather.

G. Do not perform abrasive blast cleaning whenever relative humidity exceeds 85 percent, or whenever surface temperature is less than 5 degrees F above dewpoint of ambient air.

H. Ventilation for Coating Cure: Provide fans to continuously ventilate tank interior, as required, to assist with coating cure.

3.02 PREPARATION

A. For new metal items such as structural steel, metal floor doors, manways, and frames, metal louvers, and similar fabricated items may be shop prepared and primed. Centrifugal wheel blast cleaning is an acceptable alternative to shop blast cleaning.

B. Remove, mask, or otherwise protect hardware, machined surfaces, nameplates, and other surfaces not intended to be painted.

C. Protect surfaces adjacent to or downwind of Work area from overspray.

D. Protect interior of inlet/outlet and overflow pipes from abrasive blast residue and dust with inflatable pipe plug, as approved by Engineer. Install temporary, appropriately sized polyethylene pig in pipe before installation of plug.

3.03 ENVIRONMENTAL CONTROLS

A. Containment System:

1. Provide full containment of blast emissions during entire blast operation for tank exterior. Meet requirements of SSPC–Guide 6 as modified below.
   a. Design: Reviewed by structural engineer, licensed in the State of Oregon. Consider load bearing capacity of roof for supporting containment system.
   b. Provide Class 1 containment structure. Completely shroud tank with opaque fabric that prevents spread of blast media, spent chips, corrosion byproducts, and dust.
   c. Exhaust air shall be filtered by appropriately sized dust collectors.
   d. Verify effectiveness using Method A, General Surveillance, Level 2, as described in SSPC–Guide 6.
2. As an option to containment, consideration will be given to use of self-contained blast cleaning equipment using recycled abrasives.
   a. Exterior coatings shall be roller-applied to surfaces prepared using contained blast cleaning equipment.

B. Dehumidification Equipment:

1. Provide dehumidification for field painting interior of reservoir. Dehumidification and heating equipment shall be provided by a supplier with at least 3 years' experience with necessary equipment.
2. Use dehumidification and heating equipment to control environment 24 hours a day during blast cleaning and coating application. At Contractor's option, dehumidification equipment may also be used during curing process.
3. Provide desiccant dehumidifiers as manufactured by Cargocaire Corporation, or equal. Desiccant dehumidifiers shall have a single rotary desiccant wheel capable of fully continuous operation. No liquid, granular, or loose lithium chloride drying systems will be allowed.
4. Interior space of reservoir shall be sealed and a slight positive pressure maintained as recommended by supplier of dehumidification equipment.

5. During blasting operation, dehumidification equipment shall continuously maintain a dewpoint of air inside tank at least 5 degrees F less than temperature of coldest part of tank where the Work is underway. Inside relative humidity shall not exceed 45 percent, unless specifically required by paint manufacturer for coating application and cure.
6. Auxiliary heat may be necessary to maintain surface temperature at an acceptable level for application of coating. Auxiliary equipment shall be approved for use by dehumidification equipment supplier and shall meet the following requirements:
    a. Install heaters in process air supply duct between, and blended with, dehumidifier as close to space as possible.
    b. Use electric, indirect fired combustion, or steam coil auxiliary heaters. Direct fired space heaters will not be allowed during blasting, coating, or curing cycles.
    c. Equip heaters with controls that automatically turn heater off if airflow is interrupted or internal temperature of heater exceeds its design temperature or design temperature of supply duct.
7. Measure and record ambient temperature, relative humidity, dewpoint and reservoir wall temperature a minimum of twice daily (beginning and end of work shifts) to verify proper environmental levels are achieved inside reservoir. Field-measured test results shall be made available to Engineer upon request.

C. Filtration System:

1. Designed to remove dust from air so that it does not interfere with dehumidification equipment’s ability to control dewpoint and relative humidity inside reservoir.
2. Air from reservoir or dust filtration equipment shall not be recirculated through dehumidifier during coating application or when solvent vapors are present.

D. Protect existing, adjacent storm drain system and downstream system by installing catch basin filter inserts in all catch basins in the vicinity of the work. Maintain or replace damaged filters to prevent construction and painting-related debris and material from entering the storm drainage system.

E. Where pressure washing is required to clean and prepare existing painted surfaces and the existing paint contains lead, collect washwater and paint chips that are removed by pressure washing, and package, transport, and dispose washwater and paint chips offsite in accordance with local, state, and federal regulations.

3.04 PREPARATION OF SURFACES

A. Metal Surfaces:

1. Meet requirements of the following SSPC Specifications:
   a. Solvent Cleaning: SP 1.
   b. Hand Tool Cleaning: SP 2.
   c. Power Tool Cleaning: SP 3.
   d. White Metal Blast Cleaning: SP 5.
   e. Brush-Off Blast Cleaning: SP 7.
   f. Near-White Blast Cleaning: SP 10.
   g. Power Tool Cleaning to Bare Metal: SP 11.
   h. High Pressure Water Jetting: SP 12.
2. Wherever the words “solvent cleaning”, “hand tool cleaning”, “wire brushing”, or “blast cleaning”, or similar words of equal intent are used in these Specifications or in paint manufacturer’s specifications, they shall be understood to refer to the applicable SSPC Specifications listed above.
3. Where OSHA or EPA regulations preclude standard abrasive blast cleaning, wet or vacu-blast methods may be required. Coating manufacturers’ recommendations for wet blast additives and first coat application shall apply.
4. Preblast Cleaning Requirements:
   a. Remove oil, grease, welding fluxes, and other surface contaminants prior to blast cleaning.
   b. Cleaning Methods: Steam, open flame, hot water, or cold water with appropriate detergent additives followed with clean water rinsing.
   c. Clean small isolated areas as above or solvent clean with suitable solvents and clean cloths.
   d. Round or chamfer sharp edges and grind smooth burrs, jagged edges, and surface defects.
   e. Welds and Adjacent Areas:
      1) Prepare such that there is:
         a) No undercutting or reverse ridges on weld bead.
         b) No pitting.
         c) No weld spatter on or adjacent to weld or other area to be painted.
         d) No sharp peaks or ridges along weld bead.
      2) Grind embedded pieces of electrode or wire flush with adjacent surface of weld bead.
5. Blast Cleaning Requirements:
   a. Type of Equipment and Speed of Travel: Design to obtain specified degree of cleanliness. Minimum surface preparation is as specified herein and takes precedence over coating manufacturer’s recommendations.

b. Select type and size of abrasive to produce a surface profile that meets coating manufacturer's recommendations for particular primer to be used.
c. Use only dry blast cleaning methods.
d. Do not reuse abrasive, except for designed recyclable systems.
e. Meet applicable federal, state, and local air pollution and environmental control regulations for blast cleaning and disposition of spent aggregate and debris.

6. Post-blast Cleaning and Other Cleaning Requirements:
   a. Clean surfaces of dust and residual particles from cleaning operations by dry (no oil or water vapor) air blast cleaning or other method prior to painting. Vacuum clean enclosed areas and other areas where dust settling is a problem and wipe with a tack cloth.
   b. Paint surfaces the same day they are blast cleaned. Reblast surfaces that have started to rust before they are coated.

3.05 APPLICATION

A. General:

1. The intention of these Specifications is for existing and new, interior and exterior metal and submerged metal surfaces to be painted, whether specifically mentioned or not, except as modified herein.
2. Coatings Subject to Immersion:
   a. Apply coatings to internal vessel, pipe surfaces, nozzle bores, flange gasket sealing surfaces, carbon steel internals, and stainless steel internals unless otherwise specified.
   b. Curing:
      1) Obtain full cure for completed system.
      2) Consult coatings manufacturer's written instructions.
      3) Do not immerse coating until completion of curing cycle.
3. Apply coatings in accordance with paint manufacturer's recommendations. Allow sufficient time between coats to ensure thorough drying of previously applied coat.
4. Prior to assembly or installation, paint units to be bolted together and to structures.
5. Where more than one coat of a material is applied within a given system, alternate color to provide a visual reference that required number of coats have been applied.
6. With brush, work coating into and behind anchor bolts, anchor chairs, and other areas that are difficult to paint by spray.

B. Shop Primed Surfaces:

1. Hand or power sand areas of chipped, peeled, or abraded coating, feathering the edges. Follow with a spot primer using specified primer.
2. For two-package or converted coatings, consult coatings manufacturer for specific procedures as relates to manufacturer's products.
3. Prior to application of finish coats, clean shop primed surfaces free of dirt, oil, and grease and apply one coat of specified primer.
4. After welding, prepare and prime holdback areas as required for specified paint system. Apply primer in accordance with manufacturer's instructions.

C. Stripe Coating:

1. Consists of one coat, brush applied, to coating thickness specified.
2. Apply between intermediate and final coats.
3. Color shall contrast intermediate coat to allow visual verification of application.
4. Apply to field welds, edges, angles, fasteners, and other irregular surfaces located inside tanks.

D. Film Thickness and Coverage:

1. Number of Coats:
   a. Minimum required without regard to coating thickness.
   b. Additional coats may be required to obtain minimum required paint thickness, depending on method of application, differences in manufacturers' products, and atmospheric conditions.
2. Maximum film build per coat shall not exceed coating manufacturer's recommendations.

3.06 PROTECTIVE COATINGS SYSTEMS AND APPLICATION SCHEDULE

A. Stripe Coat: One coat, brush applied, only to edges, corners, or to welds and surface irregularities intended to give those areas the required MDFT. Used before, after or in conjunction with full coats applied to the entire surface.

B. System No. 1A Interior Coating System—Potable Water, New Construction:

Surface Prep.	Paint Material	Min. Coats, Cover
Shop: Solvent clean and abrasive blast or centrifugal wheel blast (SP-5) Field: Detergent wash and fresh water rinse. Brush-off blast shop primer, abrasive blast areas of damaged primer, and field weld holdback areas to white metal (SP-5)	NSF Epoxy (Shop Applied, White)	1 coat, 4 MDFT
	NSF Epoxy (white), Spot Repairs and Welds	1 coat, 4 MDFT
	NSF Epoxy Intermediate Coat (grey or beige)	1 coat, 4 MDFT
	Stripe Coat with NSF Epoxy	1 coat, 3 MDFT
	NSF Epoxy Finish Coat (white)	1 coat, 4 MDFT

1. Minimum Dry Film Thickness, Total System:
   a. Nonstripe Coated Areas: 12 MDFT.
   b. Stripe Coated Areas: 15 MDFT.
2. Application Schedule:
   a. Use on all submerged and nonsubmerged metal surfaces inside the tank, including, but not limited to, steel plates and structural steel, exposed surfaces of inlet, outlet, and overflow piping, hatches, covers, ladders, landings, and couplings.
   b. Coat exposed stainless steel surfaces inside tank. Coat interior surfaces of stainless steel pipe for a distance of 24 inches where stainless steel pipe is connected to coated carbon steel pipe.
   c. Use on exterior surfaces of direct buried and concrete encased steel pipe.
   d. Coating is not required for bottom side of floor plates.
   e. Provide full coating thickness to structural steel surfaces that will be covered by roof plates or otherwise shielded from full coating thickness, before structural members are installed. Not required for surfaces located behind members that are fully seal welded.

C. System No. 1B Special Coating under Column Baseplate, New Construction:

Surface Prep.	Paint Material	Min. Coats, Cover
Shop: Solvent clean and abrasive blast or centrifugal wheel blast (SP-5) Field: Detergent wash and fresh water rinse. Brush-off blast shop primer, and as required by paint manufacturer	NSF Epoxy (Shop Applied)	1 coat, 4 MDFT
	NSF Epoxy	Field applied, as required by paint manufacturer
	Flexible Polyurethane	1 coat, 50 MDFT

1. Minimum Dry Film Thickness, Total System: 54 mils.
2. Application Schedule:
   a. For new tanks, use on bottom of column baseplate and top of steel floor surface under baseplate.
   b. Prepare surfaces and apply coating prior to installation of columns.
   c. Extend flexible polyurethane coating on floor 2 inches beyond outside perimeter of column baseplate.

D. System No. 1C Interior Coating System—Potable Water, Existing Tanks:

Surface Prep.	Paint Material	Min. Coats, Cover
Detergent wash and fresh water rinse. Abrasive blast to white metal (SP-5)	NSF Epoxy (Shop Applied, White)	1 coat, 4 MDFT
	NSF Epoxy Intermediate Coat (grey or beige)	1 coat, 4 MDFT
	Stripe Coat with NSF Epoxy	1 coat, 3 MDFT
	NSF Epoxy Finish Coat (white)	1 coat, 4 MDFT

1. Minimum Dry Film Thickness, Total System:
   a. Nonstripe Coated Areas: 12 MDFT.
   b. Stripe Coated Areas: 15 MDFT.

2. Application Schedule:
    a. Use on all submerged and nonsubmerged metal surfaces inside the tank, including, but not limited to, steel plates and structural steel, exposed surfaces of inlet, outlet, and overflow piping, hatches, covers, ladders, landings, and couplings.
    b. Coat exposed stainless steel surfaces inside tank. Coat interior surfaces of stainless steel pipe for a distance of 24 inches where stainless steel pipe is connected to coated carbon steel pipe.
    c. Use on exterior surfaces of direct buried and concrete encased steel pipe.

E. System No. 5 Exterior Surfaces (Exposed Metal), New Construction or Full Recoat:

Surface Prep.	**Paint Material**	**Min. Coats, Cover**
Shop : Abrasive blast, or centrifugal wheel blast (SP 10)	Epoxy Primer	1 coat, 2.5 MDFT
Field: Detergent wash and fresh water rinse. Brush-off blast shop primer, abrasive blast areas of damaged primer and field weld holdback areas to white metal (SP-10)	Epoxy Primer	1 coat, 3 MDFT
	Polyurethane Enamel	1 coat, 3 MDFT

1. Minimum Dry Film Thickness, Total System: 8.5 mils.
2. Application Schedule:
    a. Use on the following:
        1) Exposed exterior metal surfaces of tank.
        2) For galvanized surfaces to be coated, reference System No. 10.

F. System No. 5a Exterior Surfaces (Exposed Metal), Overcoating for Existing Tanks:

Surface Prep.	**Paint Material**	**Min. Coats, Cover**
Detergent wash and fresh water rinse. Mechanical tool clean spot damage to bare metal (SP-11)	Surface Tolerant Epoxy Primer (Spot Repairs)	1 coat, 3 MDFT
	Epoxy Primer (Full Tank)	1 coat, 3 MDFT
	Polyurethane Enamel	1 coat, 3 MDFT

1. Minimum Dry Film Thickness, Total System: 6 mils.
2. Application Schedule:
   a. Use on the following:
      1) Exposed exterior metal surfaces of tanks where the existing coating is suitable for over-coating.
      2) For galvanized surfaces to be coated, reference System No. 10.

G. System No. 10 Galvanized Metal Conditioning:

Surface Prep.	**Paint Material**	**Min. Coats, Cover**
Solvent Clean (SP 1) followed by Hand Tool (SP 2), Power Tool (SP 3), or Brush-off Blast (SP 7)	Coating manufacturers' recommended primer followed by System No. 5	

1. Application Schedule: Use on galvanized surfaces, including handrails and gratings, before application of System No. 5.

3.07 **TESTING**

2230.60 FIELD QUALITY CONTROL

A. Access:

1. Contractor shall provide access to Engineer or designated NACE certified coatings inspector as required to observe surface preparation and coating application, and as required to perform tests for surface profile and cleanliness, paint thickness, holidays, and any other tests deemed necessary to verify that the work complies with the specifications.

2. Leave staging up until Engineer has inspected surface or coating. Replace staging removed prior to approval by Engineer.

B. Test Equipment:

1. Provide a dry film thickness gauge to test coating thickness as specified in mils. Use electronic dry film thickness, as manufactured by DeFelsko, Ogdensburg, NY, Positest, or approved equal.
2. Provide electrical holiday detector, low voltage, wet sponge type to test finish coat, except zinc primer, high-build elastomeric coatings, and galvanizing as manufactured by Tinker and Rasor, San Gabriel, CA; Model M-1.

C. Film Thickness Measurements and Electrical Inspection of Coated Surfaces:

1. Perform with properly calibrated instruments.
2. Repair or recoat defective areas as necessary for compliance with Specifications.
3. All coats are subject to inspection by Engineer and coating manufacturer's representative.
4. Give particular attention to edges, angles, flanges, and other similar areas, where insufficient film thicknesses are likely to be present, and ensure proper millage in these areas.
5. Thickness Testing:
    a. Measure coating thickness specified in mils with magnetic or electronic type dry film thickness gauge in accordance with SSPC–PA 2.
    b. Check each coat for correct thickness. Do not make measurement before a minimum of 8 hours after application of coating.
    c. After repaired and recoated areas have dried sufficiently, tests will be conducted by Engineer.
6. Holiday (Pinhole) Testing: Test finish coat on 100 percent of the submerged surfaces for holidays and discontinuities with an electrical holiday detector in accordance with NACE RP0188.

D. Unsatisfactory Application:

1. If improper finish color or insufficient film thickness, clean surface and topcoat with specified paint material to obtain specified color and coverage. Obtain specific surface preparation information from coating manufacturer.
2. Evidence of runs, bridges, shiners, laps, or other imperfections are causes for rejection.
3. Repair defects in coating systems in accordance with written recommendations of coating manufacturer.

E. Damaged Coatings, Pinholes, and Holidays:

1. Feather edges and repair in accordance with recommendations of paint manufacturer.
2. Hand or power sand visible areas of chipped, peeled, or abraded paint, and feather edges. Follow with primer and finish coat in accordance with Specifications. Depending on extent of repair and appearance, a finish sanding and topcoat may be required.
3. Apply finish coats, including touchup and damage-repair coats in a manner that will present a uniform texture and color-matched appearance.

3.08 ACCEPTANCE

3.09 2230.70 MANUFACTURER'S SERVICES

A. Coating manufacturer's technical representative shall be present at Site as follows:

1. On the first day of application of coating.
2. A minimum of three additional Site inspection visits, each for a minimum of 3 hours.
3. As required for application quality assurance, and to determine compliance with manufacturer's instructions and these Specifications.
4. As necessary to resolve field problems attributable to or associated with manufacturer's products furnished under this Contract.
5. To verify full cure of coating prior to placing coated surfaces into immersion service.

B. The cost for manufacturer's technical representative site visits shall be included in the Contractor's cost for the painting work and shall be provided at no additional cost to the Agency.

3.10 2230.71 CLEANUP

A. Place cloths and waste that might constitute a fire hazard in closed metal containers or destroy at end of each day.

B. Upon completion of the Work, remove staging, scaffolding, and containers from Site or destroy in a legal manner.

C. Completely remove paint spots, oil, or stains upon adjacent surfaces and floors and leave Site clean.

3.11 SUPPLEMENTS

A. The supplements listed below, following “End of Section,” are a part of this Specification:

1. Paint System Data Sheet.
2. Paint Product Data Sheet

END OF SECTION

PAINT SYSTEM DATA SHEET

Complete and attach manufacturer's Technical Data Sheet to this PSDS for each coating system.

Paint System Number (from Spec.):
Paint System Title (from Spec.):
Coating Supplier:
Representative:
Surface Preparation:

Paint Material (Generic)	**Product Name/Number (Proprietary)**	**Min. Coats, Coverage**

Provide manufacturer's recommendations for the following parameters at temperature (F)/relative humidity:

Temperature/RH	**50/50**	**70/30**	**90/25**
Induction Time			
Pot Life			
Shelf Life			
Drying Time			
Curing Time			
Min. Recoat Time			
Max. Recoat Time			

Provide manufacturer's recommendations for the following:

Mixing Ratio: _____

Maximum Permissable Thinning:_____

Ambient Temperature Limitations: min.:_____ max.:_____

Surface Temperature Limitations: min.:_____ max.:_____

Surface Profile Requirements: min.:_____ max.:_____

Attach additional sheets detailing manufacturer's recommended storage requirements and holiday testing procedures.

PAINT PRODUCT DATA SHEET

Complete and attach manufacturer's Technical Data Sheet to this PDS for each product submitted. Provide manufacturer's recommendations for the following parameters at temperature (F)/relative humidity:

Product Name: _____

Temperature/RH	**50/50**	**70/30**	**90/25**
Induction Time			
Pot Life			
Shelf Life			
Drying Time			
Curing Time			
Min. Recoat Time			
Max. Recoat Time			

Provide manufacturer's recommendations for the following:

Mixing Ratio: _____

Maximum Permissible Thinning: _____

Ambient Temperature Limitations: min.: _____ max.: _____

Surface Temperature Limitations: min.: _____ max.: _____

Surface Profile Requirements: min.: _____ max.: _____

SECTION 02930

ELECTRICAL FACILITIES

DESCRIPTION

SCOPE

1.01 REFERENCES

A. The following is a list of standards which may be referenced in this section:

1. American Association of State Highway Transportation Officials (AASHTO).
2. ASTM International (ASTM):
   a. A167, Standard Specification for Stainless and Heat-Resisting Chromium-Nickel Steel Plate, Sheet, and Strip.
   b. A240/A240M, Standard Specification for Heat-Resisting Chromium and Chromium-Nickel Stainless Steel Plate, Sheet, and Strip for Pressure Vessels.
   c. A1011/A1011M, Standard Specification for Steel, Sheet and Strip, Hot-Rolled, Carbon, Structural, High-Strength Low-Alloy and High-Strength Low-Alloy with Improved Formability.
   d. B8, Standard Specification for Concentric-Lay-Stranded Copper Conductors, Hard, Medium-Hard, or Soft.
   e. C857, Standard Practice for Minimum Structural Design Loading for Underground Precast Concrete Utility Structures.
3. Electronic Industries Association (EIA/TIA): 569, Commercial Building Standard for Telecommunications Pathways and Spaces.
4. Federal Specifications (FS):
   a. W-C-596, Connector, Electrical, Power, General Specification for.
   b. W-S-896, Switch, Toggle (Toggle and Lock), Flush Mounted (General Specification).
5. Institute of Electrical and Electronics Engineers, Inc. (IEEE):
   a. C62.41, Recommended Practice on Surge Voltages in Low-Voltage AC Power Circuits.
   b. PC62.41.1, Draft Guide on the Surge Environment in Low-Voltage (1000 V and less) AC Power Circuits.
   c. 112, Standard Test Procedure for Polyphase Induction Motors and Generators.
   d. 114, Standard Test Procedures for Single-Phase Induction Motors.

6. International Electrical Testing Association (NETA): ATS, Acceptance Testing Specifications for Electrical Power Distribution Equipment and Systems.
7. National Electrical Contractor's Association, Inc. (NECA): 1, Standard Practices for Good Workmanship in Electrical Contracting.
8. National Electrical Manufacturers Association (NEMA):
    a. C80.1, Rigid Steel Conduit-Zinc Coated.
    b. 250, Enclosures for Electrical Equipment (1,000 Volts Maximum).
    c. CC1, Electrical Power Connectors for Substations.
    d. ICS 1, Industrial Control and Systems: General Requirements.
    e. ICS 2, Industrial Control and Systems: Controllers, Contactors, and Overload Relays Rated Not More Than 2000 Volts AC or 750 Volts DC.
    f. ICS 2.3, Industrial Control and Systems: Instructions for the Handling, Installation, Operation and Maintenance of Motor Control Centers.
    g. MG 1, Motors and Generators.
    h. PB 1, Panelboards.
    i. RN 1, Polyvinyl Chloride (PVC) Externally Coated Galvanized Rigid Steel Conduit and Intermediate Metal Conduit.
    j. ST 20, Dry Type Transformers for General Applications.
    k. TC 2, Electrical Polyvinyl Chloride (PVC) Tubing and Conduit.
    l. TC 3, PVC Fittings for Use with Rigid PVC Conduit and Tubing.
    m. WC 55, Instrumentation Cables and Thermocouple Wire.
    n. WC 70, Standard for Non-Shielded Power Cables Rated 2000 V or Less for the Distribution of Electrical Energy.
    o. WD 1, General Color Requirements for Wiring Devices.
9. National Fire Protection Association (NFPA): 70, National Electrical Code (NEC).
10. Underwriters Laboratories, Inc. (UL):
    a. 1, Flexible Metal Conduit.
    b. 6, Electrical Rigid Metal Conduit—Steel.
    c. 13, Power-Limited Circuit Cables.
    d. 44, Thermoset Insulated Wires and Cables.
    e. 62, Flexible Cord and Fixture Wire.
    f. 67, Panelboards.
    g. 98, Enclosed and Dead-Front Switches.
    h. 198C, High Interrupting Capacity Fuses, Current Limiting Types.
    i. 198E, Class R Fuses.
    j. 360, Liquid-Tight Flexible Steel Conduit.

k. 486A, Wire Connectors and Soldering Lugs for Use with Copper Conductors.
l. 486C, Splicing Wire Connectors.
m. 489, Molded-Case Circuit Breakers, Molded-Case Switches, and Circuit Breaker Enclosures.
n. 508, Industrial Control Equipment.
o. 510, Polyvinyl Chloride, Polyethylene and Rubber Insulating Tape.
p. 514B, Fittings for Cable and Conduit.
q. 651, Schedule 40 and 80 PVC Conduit.
r. 674, Electric Motors And Generators for use in Division 1 Hazardous (Classified) Locations.
s. 854, Service-Entrance Cables.
t. 870, Wireways, Auxiliary Gutters, and Associated Fittings.
u. 943, Ground-Fault Circuit Interrupters.
v. 1059, Terminal Blocks.
w. 1277, Electrical Power and Control Tray Cables with Optional Optical-Fibre Members.
x. 1449, Transient Voltage Surge Suppressors.
y. 1561, Dry-Type General Purpose and Power Transformers.
z. 2111, Overheating Protection for Motors.

2930.02 Definitions

1.02 DEFINITIONS

A. AHJ: Authority Having Jurisdiction.

B. MCOV: Maximum Allowable Continuous Operating Voltage.

C. MOV: Metal Oxide Varistor.

D. SASD: Silicon Avalanche Suppressor Diode.

E. SVR: Surge Voltage Rating.

F. TVSS: Transient Voltage Surge Suppressor.

1.03 SECTION INCLUDES

A. This Section covers the work necessary for complete electrical systems. Furnish materials, labor, and equipment in accordance with these Specifications and the accompanying Drawings.

1.04 INSPECTION OF THE SITE AND EXISTING CONDITIONS

A. Verify all scaled dimensions prior to construction.

B. Before submitting a bid, visit the site and become familiar with all existing conditions which will, in any way or manner, affect the work required under this Contract. No subsequent increase in Contract cost will be allowed for additional work required because of the Contractor's failure to fulfill this requirement.

1.05 RESPONSIBILITY

A. The Contractor shall be responsible for:

1. Complete systems in accordance with the intent of these Contract Documents.
2. Furnishing and installing all incidental items not actually shown or specified, but which are required by good practice to provide complete functional systems.
3. Verifying actual locations of all equipment that requires power and control circuit connections as shown on the Drawings.
4. Obtaining and paying for all construction permits and licenses.
5. Paying all governmental charges and inspection fees necessary for the prosecution of the Work, which are applicable at the time of opening Bids.

1.06 INTENT OF DRAWINGS

A. Electrical plan drawings are diagrammatic and show only general locations of equipment, devices, and raceway, unless specifically dimensioned. The Contractor shall be responsible for the complete raceway system. Provide as a minimum what is shown on the Drawings, and provide additional raceway, devices, fittings, boxes, etc., needed to fit the equipment size and/or configuration as supplied subject to the approval of the Engineer and at the Contractor's own expense.

B. In general, the background on electrical Drawings has been screened. Electrical work under this contract is shown heavier by contrast.

C. Details are typical for all locations which apply regardless of whether a callout is shown on the Drawing or not.

1.07 DEPARTURES FROM CONTRACT DOCUMENTS

A. Submit to the Engineer in writing details of any necessary, proposed departures from these Contract Documents, and the reasons therefor. Submit such requests as soon as practicable and within 20 days after award of the Contract. Make no such departures without written approval of the Engineer.

1.08 SUBSTITUTION OF MATERIALS AND EQUIPMENT

A. Manufacturers' names and catalog numbers stated herein are intended to indicate the type and quality of equipment or materials desired. Unless substitution is specifically forbidden, proposed alternatives may be submitted for approval.

B. Make requests for approval of alternatives in writing to the Engineer. Provide sufficient material or data to allow evaluation of the proposed alternative and determination of compliance with these Contract Documents. List any proposed deviations from these Contract Documents.

1.09 SUBMITTALS

A. Provide complete manufacturers' descriptive information and Shop Drawings for all equipment, material, and devices furnished under this specification Section including arrangement drawings, elementary (schematic) diagrams, interconnection and connection diagrams, etc. Provide five copies for the Engineer, Contractor, and Operation and Maintenance Manuals. On general equipment drawings, clearly indicate those items which are part of the submittal to be reviewed, and cross out items that are not applicable.

B. Submit complete control and interface schematic drawings. These Drawings shall contain diagrams, terminal numbers, device names, tag numbers, control cable conductor colors and numbers, etc., to provide complete identification of the circuits and prove coordination between the equipment.

C. Action Submittals:

1. Service entrance and metering equipment.
2. Boxes and device plates.
3. Junction and pullboxes.
4. Precast handholes.
5. Telephone terminal cabinet.
6. Wiring devices including special purpose receptacle.
7. Panelboards and mini-power centers.
8. Circuit breakers and switches.
9. Motor-rated switches.
10. Control devices, terminal blocks, and relays.
11. Contactors.
12. Transformers.
13. Support and framing channels.
14. Nameplates and nameplate schedule.
15. Unit heaters and thermostats.
16. TVSS equipment.

17. Conduit, fittings, and accessories.
18. Wireways.
19. Conductors, cable, and accessories.
20. Motors: Nameplate data, detailed information on any special features.
21. Grounding materials.
22. Motor Controls: Arrangement drawings, ratings, schematic and wiring diagrams, bill of materials, nameplate schedule, manufacturer information on components.
23. Local Control Panels: Arrangement drawings, schematic and wiring diagrams, bill of materials, nameplate schedule, manufacturer information on components.
24. Luminaires.
25. Lighting controls.
26. Seismic anchorage and bracing drawings and cut sheets.

D. Informational Submittals:

1. Seismic anchorage and bracing calculations.
2. Factory test reports.
3. Field test reports.
4. Signed permits indicating Work is acceptable to regulatory authorities having jurisdiction.
5. Operation and Maintenance Data:
    a. As specified in Section 01 78 23, Operation and Maintenance Data.
    b. Provide for all equipment, as well as each device having features that can require adjustment, configuration, or maintenance.
    c. Minimum information shall include manufacturer's preprinted instruction manual, one copy of the approved submittal information for the item, tabulation of any settings, and copies of any test reports.

E. Contractor shall review, check, and initial all submittals indicating that the submitted items meet the requirements of the Specifications and Drawings.

F. Review of the submittal information by the Engineer is for the convenience of the Agency and the Contractor to facilitate the satisfactory acceptance of the work required hereunder. This review shall neither relieve the Contractor from the responsibility for deviations from the Drawings and Specifications, nor from errors and omissions in the shop drawings or literature. The Contractor shall obtain Engineer's acceptance of submittals before commencing fabrication or installation of any materials or equipment. Equipment found not meeting the requirements of these Specifications and Drawings shall be removed, repaired, or replaced at the Contractor's own expense. Review by the

Engineer is limited to one resubmittal per item. Cost of submittal reviews beyond this limit which are required to obtain acceptance shall be reimbursed to the Engineer by the Contractor.

1.10 APPROVAL BY AUTHORITY HAVING JURISDICTION (AHJ)

A. Provide the Work in accordance with NFPA 70, National Electrical Code (NEC). Material and equipment shall be labeled or listed by a nationally recognized testing laboratory or other organization acceptable to the AHJ, in order to provide a basis for approval under the NEC.

B. Materials and equipment manufactured within the scope of standards published by Underwriters Laboratories, Inc. shall conform to those standards and shall have an applied UL listing mark or label.

1.11 QUALIFICATIONS

A. PVC-Coated, Rigid Steel Conduit Installer: Must be certified by conduit manufacturer as having received minimum 2 hours of training on installation procedures.

1.12 EXTRA MATERIALS

A. Furnish, tag, and box for shipment and storage the following spare parts and special tools:

1. Fuses, 0 to 600 Volts: Six of each type and each current rating installed.

1.13 ENERGY SOURCE NAMEPLATES

A. Furnish and install an energy source nameplate on the front of all equipment (mechanical, electrical, instrumentation and control, HVAC, plumbing, etc.) that is connected to one or more electrical sources of power.

B. Electrical equipment on which energy source nameplates are required include motors, motor starters, panelboards, disconnect switches, etc., as applicable.

C. Low voltage power sources include branch circuit breakers in panelboards.

D. Provide nameplates as specified in Article Nameplates.

1.14 OPERATION AND MAINTENANCE MANUALS

A. Provide three copies of Operation and Maintenance (O&M) Manuals in commercial quality, permanent, three-post binders with durable, cleanable, plastic covers. Each copy shall contain a neatly typewritten table of contents arranged in a systematic order with the Contractor's name, name of responsible principal, address, and telephone number. The O&M Manuals shall also include:

1. Operation, maintenance, recommended spare parts, and renewal parts information for all equipment furnished under Division 16, Electrical.
2. Set of complete, final, as-reviewed and accepted information herein required to be submitted for review following Contract award.
3. As-built electric circuit, equipment, and installation drawings showing equipment as it was actually installed and connected (include in the final O&M manual drafts).
4. Index of all equipment suppliers listing current names, addresses, and telephone numbers of those who should be contacted for service, information, and assistance.
5. As-built Contract Drawings marked with red indelible pencil on one set of Contract Drawings to show all departures from original Drawings and all electrical work revisions; prepare by obtaining new, clean sets of Contract Drawings from Engineer and pay all costs for same; field marked as-built drawings shall be initialed by the Engineer or his representative (include in the final O&M manual drafts).
6. All field and factory test results (include in the final O&M manual final drafts).
7. Complete interconnection diagrams between all control devices showing field wiring from numbered terminal to numbered terminal in block diagram format.
8. Use only clean material. File under dividers with heading in accordance with Specification item title.
9. Submit material to Engineer for review prior to delivery of the final Operation and Maintenance Manuals to Agency. Make additions or changes required by the reviewer.

1.15 INSPECTION

A. Allow materials, equipment, and workmanship to be inspected at any time by the Engineer, Agency, or their representatives. Correct work, materials, or equipment not in accordance with these Contract Documents or found to be deficient or defective in a manner satisfactory to the Engineer or Agency.

1.16 GUARANTEE

A. Guarantee all materials and workmanship furnished to be free from defect for a period of 1 year after final approval. Defective material and workmanship shall be corrected at the Contractor's own expense.

1.17 GENERAL

A. Products shall comply with all applicable provisions of NFPA 70.

B. Like Items of Equipment: End products of one manufacturer in order to achieve standardization for appearance, operation, maintenance, spare parts, and manufacturer's service.

C. Equipment and Devices Installed Outdoors or in Unheated Enclosures: Capable of continuous operation within ambient temperature range of 0 degree F to 110 degrees F.

D. Seismic Zone: Provide materials and equipment suitable for installation and operation under rated conditions in the specified seismic zone.

E. Hazardous Areas: Products shall be acceptable to the regulatory authority having jurisdiction for the class, division, and group of hazardous area indicated.

F. Equipment Finish:

1. Manufacturer's standard finish color, except where specific color is indicated.
2. If manufacturer has no standard color, finish equipment in accordance with light gray color finish as approved by Agency or Engineer.

1.18 SERVICE ENTRANCE EQUIPMENT AND METERING

A. Equipment, installation arrangement, and scope of work shall be provided in accordance with requirements of the local electric utility and approved by the local electric utility.

1.19 OUTLET AND DEVICE BOXES

A. Sheet Steel: One-piece drawn type, zinc- or cadmium-plated.

B. Cast Metal:

1. Box: Cast ferrous metal.
2. Cover: Gasketed, weatherproof, and cast ferrous metal with stainless steel screws.

3. Hubs: Threaded.
4. Lugs: Cast Mounting.
5. Manufacturers and Products, Nonhazardous Locations:
   a. Crouse-Hinds; Type FS or FD.
   b. Appleton; Type FS or FD.
6. Manufacturers and Products, Hazardous Locations:
   a. Crouse-Hinds; Type GUA or EAJ.
   b. Appleton; Type GR.

C. PVC-Coated Cast Metal:

1. Type: One-piece.
2. Material: Malleable iron, cast ferrous metal, or cast aluminum.
3. Coating:
   a. All Exterior Surfaces; 40 mils PVC.
   b. All Interior Surfaces, 2 mils urethane.
4. Manufacturers:
   a. Robroy Industries.
   b. Ocal.

1.20 JUNCTION AND PULL BOXES

A. Outlet Boxes Used as Junction or Pull Box: As specified under Article Outlet and Device Boxes.

B. Conduit Bodies Used as Junction Boxes: As specified under Article Conduit and Fittings.

C. Large Sheet Steel Box:

1. NEMA 250, Type 12.
2. Box: Code-gauge, galvanized steel.
3. Cover: Full access, screw type.
4. Machine Screws: Corrosion-resistant.

D. Large Cast Metal Box, Hazardous Locations:

1. NEMA 250, Type 7 as required for Class, Division, and Group involved.
2. Box: Cast ferrous metal, electro-galvanize finished, or copper-free aluminum with drilled and tapped conduit entrances.
3. Cover: Hinged with screws.
4. Hardware and Machine Screws: ASTM A167, Type 316 stainless steel.
5. Manufacturers and Products:
   a. Crouse-Hinds; Type EJB.
   b. Appleton; Type EJB.

E. Large Stainless Steel Box:

1. NEMA 250, Type 4X.
2. Box: 14-gauge, ASTM A240, Type 316 stainless steel, with white enamel painted interior mounting panel.
3. Cover: Hinged with clamps.
4. Hardware and Machine Screws: ASTM A167, Type 316 stainless steel.
5. Manufacturers:
   a. Hoffman Engineering Co.
   b. Robroy Industries.

F. Concrete Box, Nontraffic Areas:

1. Box: Reinforced, cast concrete with extension.
2. Cover: Steel diamond plate with locking bolts.
3. Cover Marking: ELECTRICAL, TELEPHONE, or as shown.
4. Size: 10 inch by 17 inch (minimum).
5. Manufacturer and Product: Utility Vault Co.; Series 36-1017PB, with cover DP.

1.21 PRECAST HANDHOLES

A. Construction: Precast concrete.

B. Loading: AASHTO H-10 or H-20, as noted below, in accordance with ASTM C857.

C. Drainage:

1. Slope floors toward drain points leaving no pockets or other nondraining areas.
2. Provide drainage outlet at low point of floor.

D. Raceway Entrances: Provide knockout panels on all four sides.

E. Handhole Frames and Covers:

1. Material: Steel, hot-dipped galvanized.
2. Cover Type: Solid, bolt-on or hinged, of checkered design, as noted below.
3. Cover Loading: As noted below.
4. Cover Designation: Lettering minimum 2 inches in height, as shown.

F. Hardware: Steel, hot-dip galvanized.

G. Furnish knockout for ground rod in each handhole.

H. Manufacturer and Models: Utility Vault Company.

1. Small: H-10 incidental traffic loading; Model 3030-B with 3030-DP cover.
2. Large: H-20 off-street traffic loading; Model 444-LA with 44-332P cover.

1.22 TELEPHONE TERMINAL CABINET

A. Material: Code-gauge galvanized steel box with gray finish, hinged doors, and 3/4-inch fire-resistant plywood backboard, meeting requirements of telephone service provider.

B. Minimum Size: 18 inches high by 18 inches wide by 6 inches deep.

1.23 WIRING DEVICES

A. Switches:

1. NEMA WD 1 and FS W-S-896.
2. Industrial grade, totally enclosed, ac type, with quiet tumbler switches and screw terminals.
3. Capable of controlling 100 percent tungsten filament and fluorescent lamp loads.
4. Rating: 20 amps, 120/277 volts.
5. Color: Ivory.
6. Automatic grounding clip and integral grounding terminal on mounting strap.
7. Manufacturers and Products:
   a. Leviton; 1221 Series.
   b. Bryant; 4901 Series.
   c. Hubbell; 1221 Series.

B. Receptacle, Single and Duplex:

1. NEMA WD 1 and FS W-C-596.
2. Specification grade, two-pole, three-wire grounding type with screw type wire terminals suitable for No. 10 AWG.
3. High strength, thermoplastic base color.
4. Color: Ivory.
5. Contact Arrangement: Contact to be made on two sides of each inserted blade without detent.
6. Rating: 125 volts, NEMA WD 1, Configuration 5-20R, 20 amps.
7. One-piece mounting strap with integral ground contact (rivetless construction).
8. Manufacturers and Products:
   a. Leviton; 5362 Series.
   b. Bryant; 5362 Series.

c. Hubbell; 5362 Series.

C. Receptacle, Ground Fault Circuit Interrupter:

1. Duplex, listed Class A to UL Standard 943, tripping at 5 mA.
2. Color: Ivory.
3. Rating: 125 volts, NEMA WD 1, Configuration 5-20R, 20 amps.
4. Size: For 2-inch by 4-inch outlet boxes.
5. Standard Model: NEMA WD 1, with screw terminals and provisions for testing.
6. Impact resistant nylon face.
7. Manufacturers:
   a. Bryant.
   b. Hubbell.
   c. Leviton.

D. Receptacle, Special-Purpose:

1. Mobile Standby Engine Generator Receptacle:
   a. UL listed.
   b. Rated for mobile standby engine generator service disconnect duty.
   c. Weatherproof.
   d. Heavy-duty metal assembly with back box and angle adapter.
   e. Reverse contact configured.
   f. Rated 600V ac, 200 amps, three-phase, three-wire, three-pole, Style 1.
   g. Crouse-Hinds Arktite Catalog No. AREA204126-S22; Appleton Powertite Catalog No. AJA20044-200-RS.
   h. Matching plug with cord-grip features for each mobile standby engine generator receptacle.

E. Receptacle, Explosion-Proof.

1. UL listed.
2. Dead front, interlocked, circuit breaking.
3. Electrical Ratings: 20 amps, 125 volts.
4. Hazardous Area Ratings: NEMA 7BCD, 9FG.
5. Provide matching plug with each receptacle.
6. Manufacturers and Products:
   a. Crouse-Hinds; Ark Guard 2, Series ENR.
   b. Appleton; U-Line.
   c. Killark; Series UGR/UGP.

1.24 DEVICE PLATES

A. General: Sectional type plates not permitted.

B. Plastic:

1. Material: Specification grade, 0.10-inch minimum thickness, noncombustible, thermosetting.
2. Color: To match associated wiring device.
3. Mounting Screw: Oval-head metal, color matched to plate.

C. Cast Metal:

1. Material: Malleable ferrous metal or copper-free aluminum, with gaskets.
2. Screw: Oval-head stainless steel.

D. Engraved:

1. Character Height: 1/8 inch.
2. Filler: Black.

E. Weatherproof:

1. For Receptacles, Damp and Wet Locations:
   a. Impact-resistant, nonmetallic, single-gang, horizontal-mounting, providing, while in-use, NEMA 3R rating.
   b. Stainless steel mounting and hinge hardware.
   c. Lockable, paintable.
   d. Color: Gray.
   e. Manufacturers:
      1) Carlon.
      2) Leviton.
2. For Switches:
   a. Gasketed, cast-metal or cast-aluminum, incorporating external operator for internal switch.
   b. Mounting Screw: Stainless steel.
   c. Manufacturers and Products:
      1) Crouse-Hinds; DS-181 or DS-185.
      2) Appleton; FSK-1VTS or FSK-1VS.

1.25 LIGHTING AND POWER DISTRIBUTION PANELBOARD

A. NEMA PB 1, NFPA 70, and UL 67.

B. Panelboards and Circuit Breakers: Suitable for use with 75 degrees C wire at full NFPA 70, 75 degrees C ampacity.

C. Short-Circuit Current Equipment Rating: Fully rated; series connected unacceptable.

D. Rating: Applicable to a system with available short-circuit current of the indicated value amperes rms symmetrical at 208Y/120 or 120/240 volts and the indicated value amperes rms symmetrical at 480Y/277 volts.

E. Cabinet:

1. NEMA 250, Type 12.
2. Material: Code-gauge, hot-dip galvanized sheet steel with reinforced steel frame.
3. Wiring Gutter: Minimum 4-inch square; both sides, top and bottom.
4. Front: Fastened with adjustable clamps.
    a. Trim Size: As required by mounting.
    b. Finish: Manufacturer's standard.
5. Interior:
    a. Factory assembled; complete with circuit breakers.
    b. Spaces: Cover openings with easily removable metal cover.
6. Door Hinges: Concealed.
7. Locking Device:
    a. Flush type.
    b. Doors Over 30 Inches in Height: Multipoint.
    c. Identical keylocks, with two milled keys each lock.
8. Circuit Directory: Metal frame with transparent plastic face and enclosed card on interior of door.

F. Bus Bar:

1. Material: Copper full sized throughout length.
2. Neutral: Insulated, rated same as phase bus bars with at least one terminal screw for each branch circuit.
3. Ground: Copper, installed on panelboard frame, bonded to box with at least one terminal screw for each circuit.
4. Lugs and Connection Points:
    a. Suitable for either copper or aluminum conductors.
    b. Solderless main lugs for main, neutral, and ground bus bars.
    c. Subfeed or through-feed lugs as shown.

G. Circuit Breakers:

1. UL 489.
2. Thermal-magnetic, quick-make, quick-break, molded case, of indicating type showing ON/OFF and TRIPPED positions of operating handle.
3. Type: Bolt-on circuit breakers in all panelboards.

4. Multipole circuit breakers designed to automatically open all poles when an overload occurs on one pole.
5. Do not use tandem or dual circuit breakers in normal single-pole spaces.

6. Ground Fault Equipment Protector (GFEP): 30 mA trip, 10,000 amps interrupting capacity circuit breaker, and UL listed for equipment ground fault protection.
7. Locking: Furnish permanently attached provisions for handle padlocking the main and each branch circuit breaker in the open position with at least one 1/4-inch padlock.

H. Manufacturers:

1. Eaton.
2. General Electric Co.
3. Square D Co.

1.26 MINI-POWER CENTER (MPC)

A. General: Transformer, primary and secondary main circuit breakers, and secondary panelboard section enclosed in NEMA 250, Type 3R enclosure.

B. Transformer:

1. Type: Dry, self-cooled, encapsulated.
2. Insulation: Manufacturer's standard, with UL 1561 temperature rise.
3. Full capacity, 2-1/2 percent voltage taps, two above and two below normal voltage.
4. Primary Voltage: 480, single- or three-phase.
5. Secondary Voltage: 120/240 or 208Y/120 volts, single- or three-phase, three- or four-wire, respectively.

C. Panelboard: UL 489, fully-rated.

1. Type: Thermal-magnetic, quick-make, quick-break, indicating, with noninterchangeable molded case circuit breakers.
2. Number and Breaker Ampere Ratings: Refer to Panelboard Schedule.
3. Locking: Furnish permanently attached provisions for handle padlocking the main and each branch circuit breaker in the open position with at least one 1/4-inch padlock.

D. Manufacturers:

1. Eaton.

2. General Electric Co.
3. Square D Co.

1.27 CIRCUIT BREAKER, INDIVIDUAL, 0 TO 600 VOLTS

A. UL 489 listed for use at location of installation.

B. Minimum Interrupt Rating: As shown on the Drawings.

C. Thermal-magnetic, quick-make, quick-break, indicating type showing ON/OFF and TRIPPED indicating positions of operating handle.

D. Suitable for use with 75 degrees C wire at full NFPA 70, 75 degrees C ampacity.

E. Locking: Provisions for padlocking handle.

F. Enclosure: As specified under Execution.

G. Interlock: Enclosure and switch shall interlock to prevent opening cover with breaker in the ON position.

H. Manufacturers:

1. Eaton.
2. General Electric Co.
3. Square D Co.

1.28 FUSED SWITCH, INDIVIDUAL, 0 TO 600 VOLTS

A. UL 98 listed for use and location of installation.

B. NEMA KS 1 and UL 98 Listed for application to system with available short-circuit current as shown on the Drawings.

C. Quick-make, quick-break, motor rated, load-break, heavy-duty (HD) type with external markings clearly indicating ON/OFF positions.

D. Suitable for use with 75 degrees C wire at full NFPA 70, 75 degrees C ampacity.

E. Fuse mountings shall reject Class H fuses and accept only current-limiting fuses specified.

F. Enclosure: As specified under Execution.

G. Interlock: Enclosure and switch to prevent opening cover with switch in ON position.

H. Manufacturers:

1. Eaton.
2. General Electric Co.
3. Square D Co.

1.29 NONFUSED SWITCH, INDIVIDUAL, 0 TO 600 VOLTS

A. NEMA KS 1.

B. Quick-make, quick-break, motor rated, load-break, heavy-duty (HD) type with external markings clearly indicating ON/OFF positions.

C. Suitable for use with 75 degrees C wire at full NFPA 70, 75 degrees C ampacity.

D. Enclosure: As specified under Execution.

E. Interlock: Enclosure and switch to prevent opening cover with switch in the ON position.

F. Manufacturers:

1. Eaton.
2. General Electric Co.
3. Square D Co.

1.30 SWITCH, MOTOR-RATED

A. Type: Two- or three-pole, manual motor starting/disconnect switch without overload protection.

B. Enclosure/Mounting and Rating:

1. General Purpose:
   a. Totally enclosed snap-action switch. Quick-make, slow-break design with silver alloy contacts. Listed UL 508.
   b. General Purpose Rating: 30 amperes, 600V ac.
   c. Minimum Motor Ratings:
      1) 2 hp for 120V ac, single-phase, two-pole.
      2) 3 hp for 240V ac, single-phase, two-pole.
      3) 15 hp for 480V ac, three-phase, three-pole.
   d. Screw-type terminals.
2. Explosion-proof:
   a. Provide enclosed manual motor starter-type. Three-pole nonreversing contactor.

b. Minimum Motor Rating: 10 hp, 480V ac, three-phase, three-pole.
c. Enclosure: NEMA 250, Type 7.
d. Provide lockable external handle operator.

C. Manufacturers:

1. General Purpose:
   a. Bryant.
   b. Hubbell.
2. Explosion-proof: Eaton, Type B101.

1.31 FUSE, 0 TO 600 VOLTS

A. Current-limiting, with 200,000 ampere rms interrupting rating.

B. Provide to fit mountings specified with switches and features to reject Class H fuses.

C. Motor and Transformer Circuits, 0 to 600 Volt:

1. Amperage: 0 to 600.
2. UL 198E, Class RK-1, dual element, with time delay.
3. Manufacturers and Products:
   a. Bussmann; Type LPS-RK.
   b. Littelfuse, Inc.; Type LLS-RK.

D. Motor and Transformer Circuits, 0 to 250 Volt:

1. Amperage: 0 to 600.
2. UL 198E, Class RK-1, dual element, with time delay.
3. Manufacturers and Products:
   a. Bussmann; Type LPN-RK.
   b. Littelfuse, Inc.; Type LLN-RK.

E. Feeder and Service Circuits, 0 to 600 Volt:

1. Amperage: 0 to 600.
2. UL 198E, Class RK-1, dual element, with time delay.
3. Manufacturers and Products:
   a. Bussmann; Type LPS-RK.
   b. Littelfuse, Inc.; Type LLS-RK.

F. Feeder and Service Circuits, 0 to 250 Volt:

1. Amperage: 0 to 600.
2. UL 198E, Class RK-1, dual element, with time delay.
3. Manufacturers and Products:
   a. Bussmann; Type LPN-RK.

b. Littelfuse, Inc.; Type LLN-RK.

1.32 PUSHBUTTONS, INDICATING LIGHTS, AND SELECTOR SWITCHES

A. Type: Heavy-duty, oiltight. Provide contact arrangements, colors, inscriptions, and functions as shown.

B. Contact Rating: NEMA ICS 2, Type A600.

C. Unless otherwise shown, provide the following features:

1. Selector Switch Operating Lever: Standard.

2. Indicating Lights: Push-to-test, transformer-type.
3. Pushbutton Color:
   a. ON or START: Black.
   b. OFF or STOP: Red.

D. Legend Plate:

1. Material: Aluminum.
2. Engraving: Indicating specific function, or as shown.
3. Letter Height: 7/64 inch.

E. Manufacturers and Products:

1. General Electric Co.; Type CR 104P.
2. Square D Co.; Type T.
3. Eaton; Type 10250T.

1.33 POWER TERMINAL BLOCKS

A. Rating: 600V Class B and C, three-pole, tin-plated high conductive copper, UL certified block.

B. For use with 75 degrees C wire at full 75 degrees C ampacity based on NEC.

C. Housing Material: General purpose phenolic rated at 150 degrees C maximum and minus 40 degrees C minimum.

D. Manufacturer and Model: General Electric; Class 9080.

1.34 CONTROL TERMINAL BLOCKS

A. Type: UL 1059. Compression screw clamp, with current bar providing direct contact with wire and yoke, with individual rail mounted terminals. Marking system shall permit use of preprinted or field-marked tags.

B. Yokes and Clamping Screws: Zinc-plated, hardened steel.

C. Rating: 600V ac.

D. Manufacturers:

1. Weidmuller, Inc.
2. Ideal.

1.35 MAGNETIC CONTROL RELAYS

A. NEMA ICS 2, Class A600 (600 volts, 10 amperes continuous, 7,200VA make, 720VA break), machine tool type with field convertible contacts.

B. Manufacturer and Model:

1. Eaton; Type M-600.
2. General Electric; Type CR120B.

1.36 TIME DELAY RELAY

A. Industrial Relay Rated: 150 volts, 5 amps continuous, (3600 VA make, 360 VA break).

B. Solid-state electronic, field convertible ON/OFF delay.

C. Two Form-C contacts (minimum).

D. Repeat accuracy plus or minus 2 percent.

E. Timer Adjustment: Multiple adjustable ranges, including 1 second to 60 seconds, unless otherwise shown.

F. Manufacturers:

1. Omron.
2. Eaton.
3. General Electric Co.

1.37 ELAPSED TIME METERS

A. Type: Synchronous motor driven, 0 to 99,999.9 hours range, nonreset, suitable for semiflush, panel mounting.

B. Manufacturers:

1. General Electric Co.
2. Veeder-Root.

1.38 PHASE MONITOR RELAY

A. Voltage and phase monitor relay shall drop out on low voltage, voltage unbalance, loss of phase, or phase reversal.

B. Contacts: Single-pole, double-throw, 10 amperes, 120/240V ac. Where additional contacts are shown or required, provide magnetic control relays.

C. Adjustable trip and time delay settings.

D. Transient Protection: 1,000V ac.

E. Mounting: Multipin plug-in socket base.

F. Manufacturer and Product: Automatic Timing and Controls; SLD Series.

1.39 DRY TYPE POWER TRANSFORMERS (0- TO 600-VOLT PRIMARY)

A. Type: Self-cooled, two-winding.

B. UL 1561 and NEMA ST 20.

C. Insulation Class, Temperature Rise, and Impedance: Manufacturer's standard.

D. Core and Coil:

1. 30 kVA or Less: Encapsulated.
2. 37.5 kVA and Larger: Varnish impregnated.

E. Enclosure:

1. 30 kVA or Less: NEMA 250, Type 3R, nonventilated.
2. 37.5 kVA and Larger: NEMA 250, Type 2, ventilated.

F. Voltage Taps: Full capacity, 2-1/2 percent, two above and two below normal voltage rating.

G. Sound Level: Not to exceed NEMA ST 20 levels.

H. Vibration isolators to minimize and isolate sound transmission.

I. Manufacturers:

1. General Electric.
2. Eaton.
3. Square D.

1.40 SUPPORT AND FRAMING CHANNELS

A. Carbon Steel Framing Channel:

1. Material: Rolled, mild strip steel, 12 gauge, ASTM A1011/A1011M, Grade 33.
2. Finish: Hot-dip galvanized after fabrication.

B. Stainless Steel Framing Channel: Rolled, ASTM A167, Type 316 stainless steel, 12 gauge.

C. Manufacturers:

1. B-Line Systems, Inc.
2. Unistrut Corp.

1.41 NAMEPLATES

A. Material: Laminated plastic.

B. Attachment: Adhesive.

C. Color: White, engraved to a black core, or as shown on the Drawings.

D. Engraving:

1. Devices and Equipment: Name or tag shown, or as required.
2. Panelboards:
   a. Designation.
   b. Service voltage.
   c. Phases.
3. Minimum Requirement: Label metering and power distribution equipment, local control panels, junction boxes, motor controls, and transformers.

E. Letter Height:

1. Pushbuttons, Selector Switches, and Other Devices: 1/8 inch.
2. Equipment and Panelboards: 1/4 inch.

1.42 ELECTRIC UNIT HEATER

A. Single power source with heating capacity shown.

B. Mounting brackets for permanent mounting.

C. Protective metal barrier on air inlet side.

D. Adjustable louvers on discharge side to divert air up or down as desired.

E. Heat Elements:

1. Discharge side of fan motor.
2. Resistance wire embedded in refractory material, surrounded by metallic sheath with metal heat transfer fins.

F. Overheat Protection: Automatic, thermal.

G. Fan Motor: Match phase-to-phase voltage rating of heater unless integral, fused transformer is provided for fan operating voltage.

H. Control Contactor: Integral, fully rated, with integral control power source.

I. Thermostat: Integral.

J. UL listed.

K. Manufacturer and Product: Chromalox, Inc; Type LUH.

1.43 THERMOSTAT

A. Rating: 7.4 amps continuous, 44 amps locked rotor current at 120 volts and 3.7 amps continuous, 22 amps locked rotor current at 240 volts.

B. Line voltage, single-stage, treated to resist corrosion, dust, dirt, and humidity with sealed SPDT contacts.

C. Heating Adjustment Range: 35 to 100 degrees F.

D. Cooling or Ventilating Adjustment Range: 70 to 140 degrees F.

E. Manufacturer and Product: Honeywell, Inc.; Type T631.

1.44 TRANSIENT VOLTAGE SURGE SUPPRESSION (TVSS) EQUIPMENT

A. General:

1. Units shall be suitable for the service voltage and configuration (phases and wires) shown.
2. Protection Modes:
   a. Normal, differential, and common.
   b. Bipolar or bi-directional.
3. Ratings: Short-circuit current rating shall equal or exceed that of protected distribution equipment. Surge Voltage Rating (SVR) shall not exceed those specified under UL 1449 for the

associated nominal system voltage. Maximum Allowable Continuous Operating Voltage (MCOV) shall be at least 115 percent of the nominal system voltage.

4. Unit shall be UL-listed.
5. Provide status indicators for unit ON-LINE and unit operation NORMAL.
6. Provide common alarm contact output.
7. Provide fusible disconnect switch (integral with TVSS unit, where available) where not shown connected via branch circuit device of protected distribution equipment.
8. Minimum Enclosure Rating: NEMA 250, Type 2. Provide Type 4/4X for outdoor or wet locations.

B. Type 1 TVSS:

1. Requirements: High surge current device designed for location/exposure Category C3, per IEEE C62.41. Provide surge current rating per phase as shown. Unit shall utilize symmetrically balanced Metal Oxide Varistor (MOV) technology.
2. Manufacturer and Product: Transtector; Model Aegis SP.

C. Type 2 TVSS:

1. Requirements: Designed for critical loads at service equipment (Category C3/B3) or distribution panelboard (Category C2/B3) locations. Unit shall utilize voltage-matched Silicon Avalanche Suppressor Diode (SASD) technology. Unit shall utilize modular, plug-in suppressor design.
2. Manufacturer and Product: Transtector; Model Apex III (nonservice entrance distribution panelboard) or Apex IV (service equipment).

D. Type 3 TVSS:

1. Requirements: Designed for noncritical loads at distribution panelboards with location/exposure Category C3. Unit shall utilize symmetrically balanced Metal Oxide Varistor (MOV) technology. Unit shall utilize modular, plug-in suppressor design.
2. Manufacturer and Product: Transtector; Model SPD.

1.45 CONDUIT AND FITTINGS

A. Rigid Galvanized Steel Conduit (RGS):

1. Meet requirements of NEMA C80.1 and UL 6.
2. Material: Hot-dip galvanized, with chromated protective layer.

B. PVC Schedule 40 Conduit:

1. Meet requirements of NEMA TC 2 and UL 651.
2. UL listed for concrete encasement, underground direct burial, concealed, or direct sunlight exposure, and 90 degrees C insulated conductors.

C. PVC-Coated Rigid Galvanized Steel Conduit:

1. Meet requirements of NEMA RN 1.
2. Material:
   a. Meet requirements of NEMA C80.1 and UL 6.
   b. Exterior Finish : PVC coating, 40 mils nominal thickness, bond to metal shall have tensile strength greater than PVC.
   c. Interior finish: Urethane coating, 2 mils nominal thickness.
3. Threads: Hot-dipped galvanized and factory coated with urethane.
4. Bendable without damage to either interior or exterior coating.

D. Flexible Nonmetallic, Liquid-Tight Conduit:

1. Material: PVC core with fused flexible PVC jacket.
2. UL 1660 listed for:
   a. Dry Conditions: 80 degrees C insulated conductors.
   b. Wet Conditions: 60 degrees C insulated conductors.
3. Manufacturers and Products:
   a. Carlon; Carflex or X-Flex.
   b. T & B; Xtraflex LTC or EFC.

E. Flexible Metal, Liquid-Tight Conduit:

1. UL 360 listed for 105 degrees C insulated conductors.
2. Material: Galvanized steel, with an extruded PVC jacket.

F. Flexible Conduit, Hazardous Locations:

1. Approved for use in the atmosphere involved.
2. Rating: Watertight and UL listed for use in Class I, Division 1 and Division 2 areas.
3. Outer bronze braid and an insulating liner.
4. Conductivity equal to a similar length of rigid metal conduit.
5. Manufacturers and Products:
   a. Crouse-Hinds; Type ECGJH or ECLK.

b. Appleton; EXGJH or EXLK.

G. Fittings:

1. Provide bushings, grounding bushings, conduit hubs, conduit bodies, couplings, unions, conduit sealing fittings, drain seals, drain/breather fittings, expansion fittings, and cable sealing fittings, as applicable.
2. Rigid Galvanized Steel Conduit:
   a. Meet requirements of UL 514B.
   b. Type: Threaded, galvanized.
3. PVC Conduit:
   a. Meet requirements of NEMA TC 3.
   b. Type: PVC, slip-on.
4. PVC-Coated Rigid Galvanized Steel Conduit:
   a. Meet requirements of UL 514B.
   b. Fittings: Rigid galvanized steel type, PVC-coated by conduit manufacturer.
   c. Conduit Bodies: Cast metal hot-dipped galvanized or urethane finish. Cover shall be of same material as conduit body. PVC-coated by conduit manufacturer.
   d. Finish: 40-mil PVC exterior, 2-mil urethane interior.
   e. Overlapping pressure sealing sleeves.
   f. Conduit Hangers, Attachments, and Accessories: PVC-coated.
   g. Manufacturers:
      1) Robroy Industries.
      2) Ocal.
   h. Expansion Fitting Manufacturer and Product: Ocal; Ocal-Blue XJG.
5. Flexible Nonmetallic, Liquid-Tight Conduit:
   a. Meet requirements of UL 514B.
   b. Type: High strength plastic body, complete with lock nut, O-ring, threaded ferrule, sealing ring, and compression nut.
   c. Body/compression nut (gland) design to assure high mechanical pullout strength and watertight seal.
   d. Manufacturers and Products:
      1) Carlon; Type LT.
      2) O.Z. Gedney; Type 4Q-P.
      3) Thomas & Betts; Series 6300.
6. Flexible Metal, Liquid-Tight Conduit:
   a. Metal insulated throat connectors with integral nylon or plastic bushing rated for 105 degrees C.
   b. Insulated throat and sealing O-rings.
7. Flexible Coupling, Hazardous Locations:
   a. Approved for use in the atmosphere involved.
   b. Rating: Watertight and UL listed for use in Class I, Division 1 and Division 2 areas.

c. Outer bronze braid and an insulating liner.
d. Conductivity equal to a similar length of rigid metal conduit.
e. Manufacturers and Products:
    1) Crouse-Hinds; Type ECGJH or ECLK.
    2) Appleton; EXGJH or EXLK.

1.46 METAL WIREWAYS

A. Meet requirements of UL 870.

B. Type: Steel-enclosed, with removable, hinged screw type cover.

C. Rating: Raintight.

D. Finish: Gray, baked enamel.

E. Manufacturers:

1. Circle AW.
2. Hoffman.

1.47 CONDUIT ACCESSORIES

A. Duct Bank Spacers:

1. Type: Nonmetallic, interlocking, for multiple conduit sizes.
2. Suitable for all types of conduit.
3. Manufacturers:
    a. Underground Device, Inc.
    b. Carlon.

B. Identification Devices:

1. Raceway Tags:
    a. Material: Permanent, nonferrous metal.
    b. Shape: Round.
    c. Raceway Designation: Pressure stamped, embossed, or engraved.
    d. Tags relying on adhesives or taped-on markers not permitted.
2. Warning Tape:
    a. Material: Polyethylene, 4-mil gauge with detectable strip.
    b. Color: Red.
    c. Width: Minimum 6 inches.
    d. Designation: Warning on tape that electric circuit is located below tape.
    e. Identifying Letters: Minimum 1-inch high permanent black lettering imprinted continuously over entire length.

C. Raceway Band:

1. Slip-on Type:
   a. Provide heat-shrinkable, black, medium-wall polyolefin tubing with factory-applied adhesive/sealant. Select product size based upon raceway outside diameter.
   b. Manufacturer and Product: 3M; Type IMCSN, medium wall cable sleeve.
2. Wrap-around Type:
   a. Provide 4-inch width, 20-mil thickness, nonprinted black PVC corrosion protection tape with primer.
   b. Manufacturer and Product: 3M; Type Scotchrap 51 with Scotchrap Pipe Primer.

1.48 CONDUCTORS AND CABLES

A. Conductors 600 Volts and Below:

1. Conform to applicable requirements of NEMA WC 70.
2. Conductor Type:
   a. 120- and 277-Volt Lighting, No. 10 AWG and Smaller: Solid copper.
   b. 120-Volt Receptacle Circuits, No. 10 AWG and Smaller: Solid copper.
   c. All Other Circuits: Stranded copper.
3. Insulation: Type THHN/THWN, except for sizes No. 6 and larger with XHHW-2 insulation.
4. Unless noted otherwise, conductor sizes indicated are based on copper conductors at NEC 75 degrees C ampacity. Do not provide conductors smaller than those indicated.
5. Grounding Conductors:
   a. Equipment:
      1) Provide stranded copper conductors, as indicated on the Drawings or as required by NEC, for equipment grounding.
      2) Provide conductors with green Type THHN/THWN insulation.
   b. Direct Buried: Bare stranded copper.
6. Direct Burial and Aerial Conductors and Cables:
   a. Type USE/RHH/RHW insulation, UL 854 listed or Type RHW-2/USE-2.
   b. Conform to physical and minimum thickness requirements of NEMA WC 70.
7. Flexible Cords and Cables:
   a. Type SOW-A/50 with ethylene propylene rubber insulation in accordance with UL 62.
   b. Conform to physical and minimum thickness requirements of NEMA WC 70.

B. 600-Volt Rated Cable:

1. General:
   a. Type TC, meeting requirements of UL 1277, including Vertical Tray Flame Test at 20,000 Btu per hour, and NFPA 70, Article 340, or UL 13 meeting requirements of NFPA 70, Article 725.
   b. Permanently and legibly marked with manufacturer's name, maximum working voltage for which cable was tested, type of cable, and UL listing mark.
   c. Suitable for installation in open air, in cable trays, or conduit.
   d. Minimum Temperature Rating: 90 degrees C dry locations, 75 degrees C wet locations.
   e. Overall Outer Jacket: PVC, flame-retardant, sunlight- and oil-resistant.
2. Type 1, Multiconductor Control Cable:
   a. Conductors:
      1) 14 AWG, seven-strand copper.
      2) Insulation: 15-mil PVC with 4-mil nylon.
      3) UL 1581 listed as Type THHN/THWN rated VW-1.
      4) Conductor group bound with spiral wrap of barrier tape.
      5) Color Code: In accordance with ICEA S-58-679, Method 1, Table 2.
   b. Cable: Passes the ICEA T-29-520 210,000 Btu per hour Vertical Tray Flame Test.
   c. Cable Sizes:

No. of Conductors	**Max. Outside Diameter (Inches)**	**Jacket Thickness (Mils)**
3	0.41	45
5	0.48	45
7	0.52	45
12	0.72	60

   d. Manufacturers:
      1) Okonite Co.
      2) Southwire.
3. Type 2, No. 16 AWG, Twisted, Shielded Pair, Instrumentation Cable: Single pair, designed for noise rejection for process control, computer, or data log applications meeting NEMA WC 55 requirements.
   a. Outer Jacket: 45 mils nominal thickness.

b. Individual Pair Shield: 1.35 mils, double-faced aluminum/synthetic polymer overlapped to provide 100 percent coverage.
c. Dimension: 0.31-inch nominal outside diameter.
d. Conductors:
    1) Bare soft annealed copper, Class B, seven-strand concentric, meeting requirements of ASTM B8.
    2) 20 AWG, seven-strand tinned copper drain wire.
    3) Insulation: 15 mils nominal PVC.
    4) Jacket: 4 mils nominal nylon.
    5) Color Code: Pair conductors black and red.
e. Manufacturers: Okonite Co.

C. Accessories:

1. Tape:
    a. General Purpose, Flame Retardant: 7 mils, vinyl plastic, Scotch Brand 33, rated for 90 degrees C minimum, meeting requirements of UL 510.
    b. Flame Retardant, Cold and Weather Resistant: 8.5 mils, vinyl plastic, Scotch Brand 88.
    c. Arc and Fireproofing:
        1) 30 mils, elastomer.
        2) Manufacturers and Products:
            a) 3M; Scotch Brand 77, with Scotch Brand 69 glass cloth tapebinder.
            b) Plymount; Plyarc 53, with Plyglas 77 glass cloth tapebinder.
2. Identification Devices:
    a. Sleeve-type, permanent, PVC, yellow or white, with legible machine-printed black markings.
    b. Manufacturer and Products: Raychem; Type D-SCE or ZH-SCE.
3. Connectors and Terminations:
    a. Nylon, Self-Insulated Crimp Connectors:
        1) Manufacturers and Products:
            a) Thomas & Betts; Sta-Kon.
            b) Burndy; Insulug.
            c) ILSCO.
4. Self-Insulated, Freespring Wire Connector (Wire Nuts):
    a. Plated steel, square wire springs.
    b. UL Standard 486C.
    c. Manufacturers and Products:
        1) Thomas & Betts.
        2) Ideal; Twister.
5. Cable Lugs:
    a. In accordance with NEMA CC 1.

b. Rated 600 volts of same material as conductor metal.
c. Uninsulated Crimp Connectors and Terminators:
    1) Suitable for use with 75 degrees C wire at full NFPA 70, 75 degrees C ampacity.
    2) Manufacturers and Products:
        a) Thomas & Betts; Color-Keyed.
        b) Burndy; Hydent.
        c) ILSCO.
d. Uninsulated, Bolted, Two-Way Connectors and Terminators:
    1) Manufacturers and Products:
        a) Thomas & Betts; Locktite.
        b) Burndy; Quiklug.
        c) ILSCO.

6. Cable Ties:
    a. Nylon, adjustable, self-locking, and reusable.
    b. Manufacturer and Product: Thomas & Betts; TY-RAP.
7. Heat Shrinkable Insulation:
    a. Thermally stabilized, crosslinked polyolefin.
    b. Manufacturer and Product: Thomas & Betts; SHRINK-KON.

1.49 MOTORS

A. Three-Phase:

1. For multiple units of the same type of equipment, furnish identical motors and accessories of a single manufacturer.
2. Meet requirements of NEMA MG 1.
3. Provide motors for hazardous (classified) locations that conform to UL 674 (Class I, Division 1, Group D) or UL 1604 (Class I, Division 2, Group D) and have an applied UL listing mark.
4. Motors shall be specifically designed for use and conditions intended, with a NEMA design letter classification to fit application.
5. Lifting lugs on motors weighing 50 pounds or more.
6. Operating Conditions: Maximum ambient temperature not greater than 40 degrees C and 4,000 feet above sea level, unless otherwise indicated.
7. Horsepower Rating: As designated in motor-driven equipment specifications. Brake horsepower of the driven equipment at any operating condition shall not exceed motor nameplate horsepower rating, excluding any service factor.
8. Service Factor: 1.15 minimum at rated ambient temperature, unless otherwise shown.
9. Voltage and Frequency Rating: 460V ac, 60 Hz, unless otherwise indicated in motor-driven equipment specifications.

10. Suitable for full voltage starting. 100 hp and larger also suitable for reduced voltage starting with 65 or 80 percent voltage tap settings on reduced inrush motor starters.
11. Efficiency and Power Factor: Provide premium efficiency units, except for under 1 hp, multispeed, or short-time rated motors, or motors driving gates, valves, elevators, cranes, trolleys, and hoists. Provide standard power factor.
12. Insulation Systems: Unless otherwise indicated in motor-driven equipment specifications, Class F with Class B rise at nameplate horsepower and designated operating conditions, except EXP motors that shall be Class B with Class B rise.
13. Enclosures:
    a. Open drip-proof, unless specified otherwise in the motor-driven equipment specification. Provide screens over air openings. Enclosures shall conform to NEMA MG 1.
    b. TEFC, CISD-TEFC (chemical-industry severe-duty TEFC), and TENV: Furnish with a drain hole with porous drain/weather plug.
    c. Explosion-Proof (EXP):
        1) TEFC listed to meet UL 674 and NFPA 70 requirements for Class I, Division 1, Group D hazardous locations.
        2) Integral thermostat opening on excessive motor temperature in accordance with UL 2111 and NFPA 70.
        3) Terminate thermostat leads in terminal box separate from main terminal box.
        4) TEFC listed to meet UL 1604 and NFPA 70 requirements for Class I, Division 2, Group D hazardous locations.
        5) Drain holes with drain and breather fittings.
    d. Equipment Finish: Manufacturer's standard.
14. Winding Thermal Protection:
    a. Thermostats:
        1) Motors for adjustable speed application 40 horsepower through 100 hp.
        2) Bi-metal disk or rod type thermostats embedded in stator windings.
        3) Automatic reset contacts rated 120V ac, 5 amps minimum, opening on excessive temperature.
        4) Leads extending to separate terminal box for motors 100 hp and larger.
    b. Thermistors:
        1) Motors for adjustable speed application 125 hp and larger.
        2) Thermistor embedded in each stator phase winding before winding dip and bake process.

3) Epoxy-potted, solid state thermistor control module mounted in NEMA 250, Type 4X box on motor by motor manufacturer.
4) Individual thermistor circuits factory-wired to control module.
5) Control module suitable for 120V ac power supply.
6) Control module automatically reset contact for external use rated 120V ac, 5 amps minimum, opening on abnormally high winding temperature. Manual reset shall be provided at motor controller.

15. Space Heaters:
    a. Provide winding space heaters for motors larger than 10 hp with leads wired out to motor terminal box.
    b. Provide extra hole or hub on motor terminal box as required.
    c. Unless shown otherwise, heater shall be suitable for 120V ac supply, with wattage suitable for motor frame size.
16. Nameplates: In accordance with NEMA MG1.
17. Multispeed: Meet requirements for speeds, number of windings, and load torque classification indicated in the motor-driven equipment specifications.
18. Inverter Duty Motor:
    a. Motor supplied power by adjustable frequency drives shall be inverter duty-rated.
    b. Motor shall meet all applicable requirements of NEMA MG 1, Section IV, Parts 30 and 31.
    c. Motor shall be suitable for operation over entire speed range indicated.
    d. Provide forced ventilation where speed ratio is greater than published range for motor being installed. Provide and coordinate fan power supply and motor control requirements with associated drive.
    e. Motor installed in Division 1 hazardous (classified) locations shall be identified as acceptable for variable speed when used in a Division 1 location.

B. Single-Phase:

1. Provide induction-type unit meeting NEMA MG1 requirements and suitable for application and mounting with the driven load. Motor shall be 115/230V ac, 60 Hz. Provide integral thermal protection and manufacturer's standard insulation system.
2. Horsepower rating: As specified under motor-driven equipment specification.
3. Single-speed: Single-winding. Speed as specified under motor-driven equipment specification.
4. Two-speed: Two-winding; speeds as specified under motor-driven equipment specification.

5. Enclosure: Open drip-proof, unless otherwise noted.

C. Manufacturers:

1. General Electric.
2. Reliance Electric.
3. U.S. Electrical Motors.

D. Submersible Pump Motor:

1. Manufacturers:
   a. Reliance Electric.
   b. ITT Flygt Corp.
2. At 100 Percent Load:

Submersible Pump Motors		
Horsepower	**Guaranteed Minimum Efficiency**	**Guaranteed Minimum Power Factor**
5 through 10	80	82
10.1 through 50	85	82
50.1 through 100	87	82
Over 100	89	82

3. Insulation System: Manufacturer's standard Class B or Class F.
4. Motor capable of running dry continuously.
5. Enclosure:
   a. Hermetically sealed, watertight, for continuous submergence up to 65-foot depth.
   b. Listed to meet UL 674 and NFPA 70 requirements for Class I, Division 1, Group D hazardous atmosphere.
   c. Seals: Tandem mechanical.
6. Bearing and Lubrication:
   a. Permanently sealed and lubricated, replaceable antifriction guide and thrust bearings.
   b. Minimum 15,000 hours L-10 bearing life.
7. Inrush kVA/horsepower no greater than NEMA MG 1 and NFPA 70, Code F.
8. Winding Thermal Protection:
   a. Thermal sensor and switch assembly, one each phase, embedded in stator windings and wired in series.
   b. Switches normally closed, open upon excessive winding temperature, and automatically reclose when temperature has cooled to safe operating level.
   c. Switch contacts rated 5 amps, 120V ac.

9. Motor Seal Failure Moisture Detection:
    a. Probes or sensors to detect moisture beyond seals.
    b. Probe or sensor monitoring module for mounting in motor controller, suitable for operation from 120V ac supply.
    c. Monitoring module with control power transformer, probe test switch and test light, and two independent 120V ac contacts, one opening and one closing when the flux of moisture is detected.
10. Bearing Overtemperature Protection for Motors Larger than 100 hp:
    a. Sensor on lower bearing housing monitoring bearing temperature.
    b. Any monitoring relay necessary to provide 120V ac contact opening on bearing overtemperature.
11. Winding thermal protection, moisture detection, and bearing overtemperature specified above may be monitored by a single device providing two independent 120V ac contacts, one closing and one opening on malfunction.
12. Connecting Cables:
    a. One cable containing power, control, and grounding conductors or two separate cables, one containing power and grounding conductors, and the other containing control and grounding conductors.
    b. Each cable suitable for hard service, submersible duty with watertight seal where cable enters motor.
    c. Length: 30 feet minimum or as required by the installation.
    d. UL 1 listed and sized in accordance with NFPA 70.

E. Factory Testing:

1. Tests:
    a. In accordance with IEEE 112 for polyphase motors and IEEE 114 for single-phase motors.
    b. Provide routine (production) tests on all motors in accordance with NEMA MG 1. Test multispeed motors at all speeds.
    c. For premium efficiency motors, test efficiency and power factor at 50, 75, and 100 percent of rated horsepower:
        1) In accordance with IEEE 112, Test Method B, and NEMA MG 1, Paragraphs 12.54 and 12.57.
        2) Provide certified test reports for polyphase motors 100 hp and larger.
        3) For smaller motors, furnish a copy of a certified motor efficiency test report for identical motor.

2. Test Report Forms:
    a. Routine Tests: IEEE 112, Form A-1.
    b. Efficiency and power factor by Test Method B, IEEE 112, Form A-2, and NEMA MG 1, Paragraph (table) 12.57.

1.50 GROUNDING

A. Ground Rods: Provide copper-clad steel with minimum diameter of 3/4-inch, and length of 10 feet.

B. Ground Conductors: As specified in Article Conductors and Cable.

C. Connectors:

1. Exothermic Weld Type:
    a. Outdoor Weld: Suitable for exposure to elements or direct burial.
    b. Indoor Weld: Utilize low-smoke, low-emission process.
    c. Manufacturers:
        1) Erico Products, Inc.; Cadweld and Cadweld Exolon.
        2) Thermoweld.
2. Compression Type:
    a. Compress-deforming type; wrought copper extrusion material.
    b. Single indentation for conductors 6 AWG and smaller.
    c. Double indentation with extended barrel for conductors 4 AWG and larger.
    d. Single barrels prefilled with oxide-inhibiting and antiseizing compound.
    e. Manufacturers:
        1) Burndy Corp.
        2) Thomas and Betts Co.
        3) ILSCO.
3. Mechanical Type:
    a. Split-bolt, saddle, or cone screw type; copper alloy material.
    b. Manufacturers:
        1) Burndy Corp.
        2) Thomas and Betts Co.

1.51 LOW VOLTAGE MOTOR CONTROL

A. General:

1. Make adjustments as necessary to wiring, conduit, disconnect devices, motor starters, branch circuit protection, and other affected material or equipment to accommodate motors and motor ratings actually provided.
2. Controllers: NEMA ICS 2, Class A.

3. Thermal Overload Protection:
   a. Inverse-time-limit characteristic.
   b. Heater: Bimetallic overload, adjustable trip.
   c. Relay Trip: Standard, Class 20.
   d. Manual reset.
   e. Provide in each ungrounded phase.
   f. Mount within starter unit.
4. Control Transformer:
   a. Two winding, 120-volt secondary, primary voltage to suit.
   b. Two current-limiting fuses for primary circuit.
   c. One fuse in secondary circuit.
   d. Mount within starter unit.
5. Suitable for use with 75 degrees C wire at full NFPA 70, 75 degrees C ampacity.
6. Lifting lugs on all equipment and devices weighing over 50 pounds.
7. Operating Conditions:
   a. Ambient Temperature: Maximum 40 degrees C.
   b. Equipment to be fully rated without any derating for operating conditions listed above.
8. Equipment Finish:
   a. Electrocoating process applied over rust-inhibiting phosphated base coating.
   b. Exterior Color: Provide manufacturer's standard finish as approved by Agency or Engineer.
9. Phase Monitoring Relay: Where shown, provide three-phase monitoring relay to protect against low voltage, voltage unbalance, phase loss, and phase reversal.

B. Manually Operated Starter, Fractional Horsepower:

1. Rating: 16 amperes continuous at 277 volts maximum.
2. Single-phase, nonreversing, full voltage with overload protection.
3. Toggle operated.
4. Enclosure: As shown on the Drawings.
5. Neon ON Light: Red.
6. Handle guard/lock-off attachment.

C. Manually Operated Starter, Integral Horsepower:

1. Rating: Horsepower rated to maximum of 10 hp at 600 volts with overload protection.
2. Single-phase or three-phase, nonreversing, full voltage.
3. Control: Toggle or pushbutton.
4. Enclosure: As shown on the Drawings.
5. Red ON pilot light in series with an auxiliary contact.
6. Lockable in OFF position.
7. Two spare auxiliary, field-convertible contacts.

D. Combination Full-Voltage, Magnetic Starter:

1. Rating: Horsepower rated at 600 volts, UL labeled for short circuit current amperes shown on the Drawings with overload protection.
2. Three-phase, nonreversing, full voltage.
3. Control: As shown on the Drawings.
4. Disconnect Type: Motor circuit protector.
5. Enclosure: As shown on the Drawings.
6. Pilot Lights: Red—ON and Green—OFF push-to-test LED's.
7. Padlockable operating handle.

E. Combination Reduced-Voltage, Solid-State Starter:

1. Rating: Horsepower rated at 600 volts, UL labeled for short circuit current amperes shown on the Drawings with overload protection.
2. Three-phase, nonreversing with bypass run contactor.
3. Control: As shown on the Drawings.
4. Disconnect Type: Motor circuit protector.
5. Class 10/20/30 electronic overload relay, switch, or dip switch selectable.
6. Kick start, with adjustable torque and time settings.
7. Ramp start, selectable current or torque, and adjustable time.
8. Smooth stop ramp, adjustable time.
9. Phase loss, unbalance, and phase reversal protection.
10. LED display or LCD of fault, N.O. contact to communicate fault conditions.
11. Enclosure: As shown on the Drawings.
12. Pilot Lights: Red—ON and Green—OFF push-to-test LED's.
13. Padlockable operating handle, capable of up to three locks.

F. Combination Two-Speed Motor, Magnetic Starter:

1. Rating: Horsepower rated at 600 volts, UL labeled for short circuit current amperes shown on the Drawings with overload protection.
2. Three-phase, nonreversing, full voltage.
3. Control: As shown on the Drawings.
4. Disconnect Type: Motor circuit protector.
5. Suitable for two-speed, two-winding motors.
6. Enclosure: As shown on the Drawings.
7. Pilot Lights: Green—OFF, Red—HIGH SPEED and Amber—LOW SPEED push-to-test LED's.
8. Padlockable operating handle.

G. Manufacturers:

1. Eaton.
2. General Electric.
3. Square D.

4. Allen Bradley.

H. Combination and Adjustable Frequency Drive:

1. Provide AFDs separately enclosed in accordance with this specification.
2. AFD and all associated optional equipment shall be UL Listed according to UL 508C Power Conversion Equipment. A UL label shall be attached inside each enclosure as verification.
3. The AFD shall be designed constructed and tested in accordance with UL, CSA, NEMA and NEC standards.
4. The AFD shall be the ultra low harmonic type.
   a. Include a Direct Torque Control (DTC) AC to AC converter utilizing the latest isolated gate bipolar transistor (IGBT) technology.
   b. Employ a DTC inner loop torque control strategy that mathematically determines motor torque and flux every 25 microseconds (40,000 times per second).
   c. Include an optional operational mode for scalar or V/Hz operation.
5. Torque Requirements: Variable, unless otherwise indicated.
6. Synchronous Motor Speed: As indicated in the motor-driven equipment specification.
7. Operating Environment: Maximum 40 degrees C (104 degrees F) ambient and 4,000 feet above sea level, unless otherwise indicated.
8. Overall Efficiency: 97 percent, minimum, at full load and full speed.
9. Overall Power Factor: 0.99 at all speeds and loads
10. Rated Capacity: Continuous industrial duty and suitable for use with Standard NEMA MG 1, Design B motors and full load currents per NEC.
11. Maximum Circuit Distance between AFD and Motor: 400 feet.
12. Equipment Short Circuit Rating: Suitable for connection to a system with maximum source three-phase, bolted fault, short-circuit current shown on the Drawings at 480 volts. Include integral overcurrent protective device if required to withstand the available fault current in the indicated configuration.
13. Incoming Line Disconnect: Provide an integral positive means of disconnecting incoming power, and line-side overcurrent protection for the drive system; lockable in the open position with defeatable door interlock.
14. Input Voltage: 460 volts, plus and minus 10 percent.
15. Input Frequency: 60 Hz, nominal (48 Hz to 63 Hz).
16. Output Voltage Range: Zero to 460 volts, three-phase, 0 Hz to 60 Hz.

17. Maximum Peak Voltage Output Pulse: 1,000 volts, with pulse rise time of not less than 2 microseconds, and a maximum rate of rise of 500 volts per microsecond.
18. Maximum Frequency Output Pulse (Carrier): 4,000 Hz.
19. Motor Audible Noise Level: When operating throughout speed range of AFD, no more than 3 dBA above that designated in NEMA MG 1 for same motor operated at constant speed with a 60-Hz supply voltage.
20. Short-Time Overload Capacity: 150 percent of rated load in rms current for 1 minute following full load, full speed operation.
21. Furnish drives with output current-limiting reactors pre-wired and mounted within the drive enclosure.
22. Diagnostics: Manufacturer's standard for drive adjustment and troubleshooting.
23. Drive Protection: Provide manufacturer's standard unless otherwise indicated.
24. Operational Features: Provide manufacturer's standard unless otherwise indicated.
25. Minimum Controls: Alphanumeric keypad and display.
26. Forced Air Ventilation: Size for periodic operation to cool unit with maximum room ambient temperature of 104 degrees F. Furnish filters on ventilation intakes.
27. Component Identification: Selector switches, indicating lights, potentiometers, instruments, protective devices, relays, terminal blocks and other components identified by means of mechanically attached, engraved, laminated nameplates.
28. Operator Interface: Mount drive local control on front door of enclosure; provide membrane type keypad.
29. Control Circuit Disconnect: Provide pull-apart connectors or other means to de-energize circuits in units that are not otherwise de-energized by main power disconnect.
30. Motor Space Heater Provisions: Furnish 120V ac power for motor space heaters automatically controlled to energize when the drive is not running and supplied via a step-down transformer from the drive main power source.
31. Minimum Signal Interface Capabilities: Two programmable digital inputs and three programmable dry-contact outputs, plus two programmable dc analog inputs and two programmable dc outputs.
32. Communications Interface:
    a. The AFD shall utilize a communications architecture, utilizing plug-in communications cards, for high-speed noise immune connectivity.
    b. The communications capabilities shall include, but not be limited to, run-stop control, speed set adjustment, proportional/integral/derivative PID control adjustments, current limit, and accel/decal time adjustments.

c. The AFD shall have the capability of allowing the Distributed Drive Controller (DDC) to monitor feedback such as process variable feedback, output speed/frequency, current (in amps), percent torque, power (kW), kilowatt hours (resettable), operating hours (resettable), relay outputs, and diagnostic warning and fault information.

33. Motor Winding Thermal Protection: Provide space, power, control interlock, and manual reset for the motor winding thermostat or thermistor furnished with the motor and specified in Article Motors.
34. Separately-Mounted Enclosure:
    a. Unless otherwise indicated, provide each separately-mounted AFD in a NEMA 250, Type 1, gasketed, enclosure, front accessible only, and with hinged door(s).
    b. Provide thermostatically-controlled space heater(s) powered via a step-down transformer from the drive main power source.
    c. Equipment Identification Plate: 16-gauge stainless steel with 1/4-inch die-stamped equipment tag number securely mounted in a readily visible location.
    d. Drive Identification Nameplates: Provide laminated plastic (white, engraved to black core) for each drive engraved with approved submittal inscription.
    e. Lifting Lugs: Provide for equipment weighing over 50 pounds.
    f. Finishes: Manufacturer's standard gray unless otherwise indicated.
35. Source Quality Control:
    a. All printed circuit boards shall be completely tested and burned-in before being assembled into the completed AFD.
    b. Inspections: Perform manufacturer's standard, all units.
    c. Functional Test: Perform manufacturer's standard, all units.
        1) Preliminary functional test shall include a minimum 1 hour burn-in and computerized final test.
        2) Burn-in shall be at 104 degrees F (40 degrees C) at full rated load, or cycled load.
        3) AFD input power shall be continuously cycled for maximum stress and thermal variation.
    d. Load Test: Perform manufacturer's standard.
36. Manufacturers:
    a. ABB, Inc.; ACS800-U31 or ACS800-37.
    b. Or approved equal.

1.52 LOCAL CONTROL PANELS

A. Enclosure:

1. NEMA 250, Type 12, or as shown.
2. Minimum Metal Thickness: 14 gauge.
3. Doors: Rubber gasketed with continuous hinge.
4. Finish: Gray.
5. Size panels to adequately dissipate heat generated by equipment mounted in or on panel.
6. Mount internal and door-mounted devices as shown.
7. Manufacturer:
   a. Hoffman.
   b. H. F. Cox.

B. Functions: As shown on schematic diagram(s).

C. Wiring:

1. Power and Control Wiring:
   a. 600-volt class, insulated, stranded copper.
   b. Size: Minimum 14 AWG enclosed in either sheet metal raceway or plastic wiring duct.
2. Signal Circuit Wiring: Twisted shielded pairs minimum No. 16 AWG, separated at least 6 inches from power wiring.
3. Device Identification: Provide engraved plastic nameplates, adhesive attachment, black letters on white background.

1.53 LUMINAIRES AND ACCESSORIES

A. Specific requirements relating to fixture type, lamp type, and mounting hardware are provided in the Luminaire Schedule on Drawings.

B. Poles:

1. Rating (With Luminaire): 100 mph steady winds, without incurred damage.
2. Material: As specified in Luminaire Schedule.

1.54 LIGHTING CONTROL

A. Photocell:

1. Automatic ON/OFF switching photo control.
2. Housing: Self-contained, die-cast aluminum, unaffected by moisture, vibration, or temperature changes.
3. Setting: ON at dusk and OFF at dawn.
4. Time delay feature to prevent false switching.
5. Field adjustable to control operating levels.

6. Manufacturers:
   a. Tork.
   b. Paragon Electric Company.

B. Dedicated light switch or ON/OFF/PHOTOCELL selector test switch.

1.55 CONSTRUCTION2930.40 GENERAL ……

1.56 GENERAL

A. Install materials and equipment in accordance with manufacturer's instructions and recommendations.

B. Work shall comply with all applicable provisions of NECA 1.

C. Install materials and equipment in hazardous areas in a manner acceptable to regulatory authority having jurisdiction for the class, division, and group of hazardous areas shown.

D. Electrical Drawings show general locations of equipment, devices, and raceway, unless specifically dimensioned.

1.57 DEMOLITION

A. General Demolition:
   1. Where shown, de-energize and disconnect nonelectrical equipment for removal by others.
   2. Where shown, de-energize, disconnect, and remove electrical equipment.
   3. Remove affected circuits and raceways back to serving panelboard or control panel. Where affected circuits are consolidated with others, remove raceways back to first shared condulet or box. Where underground or embedded raceways are to be abandoned, remove raceway to 1 inch below surface of structure or 12 inches belowgrade and restore existing surface.

1.58 PROTECTION FOLLOWING INSTALLATION

A. Protect materials and equipment from corrosion, physical damage, and effects of moisture on insulation.

B. Cap conduit runs during construction with manufactured seals.

C. Close openings in boxes or equipment during construction.

D. Energize space heaters furnished with equipment.

1.59 SERVICE ENTRANCE EQUIPMENT AND METERING

A. Unless otherwise specified or shown, schedule and coordinate work of serving utility as required to provide electric service to the Work.

1.60 OUTLET AND DEVICE BOXES

A. Install suitable for conditions encountered at each outlet or device in wiring or raceway system, sized to meet NFPA 70 requirements.

B. Size:

1. Depth: Minimum 2 inches, unless otherwise required by structural conditions. Box extensions not permitted.
    a. Hollow Masonry Construction: Install with sufficient depth such that conduit knockouts or hubs are in masonry void space.
2. Ceiling Outlet: Minimum 4-inch octagonal sheet steel device box, unless otherwise required for installed fixture.
3. Switch and Receptacle: Minimum 2-inch by 4-inch sheet steel device box.

C. Locations:

1. Drawing locations are approximate.
2. To avoid interference with mechanical equipment or structural features, relocate outlets as directed by Engineer or Agency in writing.
3. Light Switch: Install on lock side of doors.

D. Mounting Height:

1. General:
    a. Dimensions given to centerline of box.
    b. Where specified heights do not suit building construction or finish, mount as directed by Engineer or Agency in writing.
2. Switches: 48 inches above floor.
3. Thermostat: 54 inches above floor.
4. Telephone Outlet: 6 inches above counter tops or 15 inches above floor.
5. Wall Mounted Telephone Outlet: 52 inches above floor.
6. Receptacles:
    a. General Indoor Areas: 15 inches above floor.
    b. General Indoor Areas (Counter Tops): Install device plate bottom or side flush with top of splashback, or 6 inches above counter tops without splashback.
    c. Industrial Areas, Workshops: 24 inches above floor.
    d. Outdoor, All Areas: 24 inches above finished grade.

e. Mobile standby engine generator, 36 inches, minimum, above finished grade and securely fastened to structure with 5/16-inch, minimum, diameter bolts.

E. Install plumb and level.

F. Flush Mounted:

1. Install with concealed conduit.
2. Install proper type extension rings or plaster covers to make edges of boxes flush with finished surface.

G. Support boxes independently of conduit by attachment to building structure or structural member.

H. Box Type (Steel Raceway System):

1. Outdoor Locations: Cast metal.
2. Indoor Dry Locations:
   a. Exposed Rigid Galvanized Steel Conduit: Cast metal.
   b. Concealed Raceways: Sheet steel.
   c. Class I Hazardous Areas: Cast metal.
3. Indoor Wet Locations:
   a. Exposed Raceways: PVC-coated cast metal.
   b. Concealed Raceways: Cast metal.
   c. Class I Hazardous Areas: PVC-coated cast metal.
4. Cast-in-Place Concrete Slabs: Sheet steel.

I. Box Type, Corrosive Locations (PVC-Coated rigid Galvanized Steel Raceway System): PVC-coated cast metal with matching cover.

1.61 JUNCTION AND PULL BOXES

A. Install where shown and where necessary to terminate, tap-off, or redirect multiple conduit runs.

B. Install pull boxes where necessary in raceway system to facilitate conductor installation.

C. Install in conduit runs at least every 150 feet or after the equivalent of three right-angle bends.

D. Use outlet boxes as junction and pull boxes wherever possible and allowed by applicable codes.

E. Use conduit bodies as junction and pull boxes where no splices are required and their use is allowed by applicable codes.

F. Installed boxes shall be accessible.

G. Do not install on finished surfaces.

H. Install plumb and level.

I. Support boxes independently of conduit by attachment to building structure or structural member.

J. At or Belowgrade:

1. Install boxes for belowgrade conduit flush with finished grade in locations outside of paved areas, roadways, or walkways.
2. If adjacent structure is available, box may be mounted on structure surface just above finished grade in accessible but unobtrusive location.
3. Obtain Engineer's or Agency's written acceptance prior to installation in paved areas, roadways, or walkways.
4. Use boxes and covers suitable to support anticipated weights.

K. Flush Mounted:

1. Install with concealed conduit.
2. Holes in surrounding surface shall be no larger than required to receive box.
3. Make edges of boxes flush with final surface.

L. Mounting Hardware:

1. Noncorrosive Indoor Dry Areas: Galvanized.
2. Outdoor or Noncorrosive Indoor Wet Areas: Stainless steel.
3. Corrosive Areas: Stainless steel.

M. Location/Type:

1. Indoor, Dry: NEMA 250, Type 12.
2. Indoor and Outdoor, Wet: NEMA 250, Type 4X, stainless steel.
3. Indoor and Outdoor, Wet and Corrosive: NEMA 250, Type 4X, stainless steel.
4. Indoor and Outdoor, Hazardous: NEMA 250, Type 7.
5. Underground Conduit: Concrete.
6. Corrosive: NEMA 250, Type 4X, stainless steel.
7. Outdoor, Where Indicated Weatherproof (WP): NEMA 250, Type 4X.
8. Industrial Use in Areas Not Otherwise Classified: NEMA 250, Type 12, unless otherwise shown.

N. Install Drain/breather fittings in NEMA 250, Type 4X enclosures.

1.62 PRECAST HANDHOLES

A. Excavate, shore, brace, backfill, and final grade.

B. Do not install until final raceway grading has been determined.

C. Install such that raceways enter at nearly right angles and as near as possible to one end of wall, unless otherwise shown.

1.63 TELEPHONE OUTLET

A. Provide empty outlet boxes and cover plates meeting requirements of EIA/TIA 569.

1.64 WIRING DEVICES

A. Switches:

1. Mounting Height: See Article Outlet and Device Boxes.
2. Install with switch operation in vertical position.
3. Install single-pole, two-way switches such that toggle is in up position when switch is on.

B. Receptacles:

1. Install with grounding slot down, except where horizontal mounting is shown, in which case install with neutral slot down.
2. Ground receptacles to boxes with grounding wire only.
3. Weatherproof Receptacles:
   a. Install in cast metal box.
   b. Install such that hinge for protective cover is above receptacle opening.
4. Special-Purpose Receptacles: Install in accordance with manufacturer's instructions.

1.65 DEVICE PLATES

A. Securely fasten to wiring device; ensure a tight fit to box.

B. Flush Mounted: Install with all four edges in continuous contact with finished wall surfaces without use of mats or similar materials. Plaster fillings will not be acceptable.

C. Surface Mounted: Plate shall not extend beyond sides of box, unless plates have no sharp corners or edges.

D. Install with alignment tolerance to box of 1/16 inch.

E. Engrave with designated titles.

F. Types (Unless Otherwise Shown):

1. Outdoor: Weatherproof.
2. Indoor:
   a. Flush Mounted Boxes: Plastic.
   b. Surface Mounted, Metal Boxes: Cast metal.

1.66 PANELBOARDS AND MINI-POWER CENTERS

A. Install securely, plumb, in-line and square with walls.

B. Install top of panelboard cabinet and top of mini-power center distribution panelboard section 6 feet above floor, unless otherwise shown.

C. Provide typewritten circuit directory for each panelboard.

D. For Mini-Power Centers (MPC's), mount the typewritten circuit directory on the front of the MPC next to the distribution panel hinged cover plate, not on the inside of the hinged coverplate.

E. Cabinet Location/Type:

1. Indoor Dry: NEMA 250, Type 1.
2. Wet or Outdoor: NEMA 250, Type 4X, stainless steel.
3. Industrial Use in Areas Not Otherwise Classified: NEMA 250, Type 12, unless otherwise shown.

1.67 CIRCUIT BREAKERS AND SWITCHES

A. Location and Enclosure Type:

1. Hazardous Gas: NEMA 250, Type 7.
2. Wet or Outdoor: NEMA 250, Type 4X.
3. Corrosive: NEMA 250, Type 4X.
4. Wet and Corrosive: NEMA 250, Type 4X.
5. Indoor Dry, Industrial Use: NEMA 250, Type 12.
6. Indoor Dry, General Purpose: NEMA 250, Type 1.
7. Where Denoted WP: NEMA 250, Type 4X.

1.68 SWITCH, MOTOR RATED

A. Install with switch operation in vertical position such that toggle is in up position when ON.

B. Install within sight of motor when used as a disconnect switch.

C. Mounting Height: See Article Outlet and Device Boxes.

D. Enclosure Type:

1. General Purpose: See Articles Outlet and Device Boxes and Device Plates.
2. Explosion-proof: See product specification.

1.69 TERMINAL BLOCKS

A. Install for termination of power, control, and instrumentation circuits entering or leaving equipment and local control panels.

1.70 DRY TYPE POWER TRANSFORMERS (0- TO 600-VOLT PRIMARY)

A. Load external vibration isolator such that no direct transformer unit metal is in direct contact with mounting surface.

B. Provide moisture-proof flexible conduit for electrical connections.

C. Connect voltage taps to achieve (approximately) rated output voltage under normal plant load conditions.

D. Provide wall brackets where required.

1.71 SUPPORT AND FRAMING CHANNELS

A. Install where required for mounting and supporting electrical equipment and raceway systems.

B. Channel Type:

1. Interior, Dry, Noncorrosive Locations: Carbon steel.
2. Interior, Wet, Noncorrosive Locations: Type 316 stainless steel.
3. Interior, Wet or Dry Corrosive Locations: Type 316 stainless steel.
4. Outdoor Locations: Type 316 stainless steel.

C. Paint carbon steel channel cut ends prior to installation with zinc-rich primer.

1.72 NAMEPLATES

A. Provide identifying nameplate on all equipment.

1.73 ELECTRIC UNIT HEATER

A. Attach securely and permanently to prevent objectionable operating noise.

1.74 TRANSIENT VOLTAGE SURGE SUPPRESSION (TVSS) EQUIPMENT

A. Install in accordance with manufacturer's instructions, including lead length, overcurrent protection, and grounding.

1.75 CONDUIT AND FITTINGS

A. General:

1. Crushed or deformed raceways not permitted.
2. Maintain raceway entirely free of obstructions and moisture.
3. Immediately after installation, plug or cap raceway ends with watertight and dust-tight seals until time for pulling in conductors.
4. Sealing Fittings: Provide drain seal in vertical raceways where condensate may collect above sealing fitting.
5. Avoid moisture traps where possible. When unavoidable in exposed conduit runs, provide junction box and drain fitting at conduit low point.
6. Group raceways installed in same area.
7. Follow structural surface contours when installing exposed raceways. Avoid obstruction of passageways.
8. Run exposed raceways parallel or perpendicular to walls, structural members, or intersections of vertical planes.
9. Block Walls: Do not install raceways in same horizontal course with reinforcing steel.
10. Install watertight fittings in outdoor, underground, or wet locations.
11. Paint threads and cut ends, before assembly of fittings, of galvanized steel and PVC-coated galvanized steel conduit with zinc-rich paint or liquid galvanizing compound.
12. Metal conduit to be reamed, burrs removed, and cleaned before installation of conductors, wires, or cables.
13. Do not install raceways in concrete equipment pads, foundations, or beams.
14. Horizontal raceways installed under floor slabs shall lie completely under slab, with no part embedded within slab.
15. Install concealed, embedded, and buried raceways so that they emerge at right angles to surface and have no curved portion exposed.
16. Install conduits for fiber optic cables, telephone cables, and Category 5 data cables in strict conformance with the requirements of EIA/TIA 569.

B. Installation in Cast-in-Place Structural Concrete:

1. Minimum cover 2 inches, including all fittings.
2. Conduit placement shall not require changes in reinforcing steel location or configuration.

3. Provide nonmetallic support during placement of concrete to ensure raceways remain in position.
4. Conduit larger than 1 inch shall not be embedded in concrete slabs, walls, foundations, columns or beams, unless approved by Engineer in writing.
5. Slabs and Walls:
    a. Trade size of conduit not to exceed one-fourth of the slab or wall thickness.
    b. Install within middle two-fourths of slab or wall.
    c. Separate conduit by a minimum ten times conduit trade size, center-to-center, unless otherwise shown.
    d. Cross conduit at an angle greater than 45 degrees, with minimum separation of 1 inch.
    e. Separate conduit by a minimum six times the outside dimension of expansion and deflection fittings at expansion joints.
    f. Conduit shall not be installed below the maximum water surface elevation in walls of water holding structures.
6. Columns and Beams:
    a. Trade size of conduit not to exceed one-fourth of beam thickness.
    b. Conduit cross-sectional area not to exceed 4 percent of beam or column cross section.

C. Conduit Application:

1. Diameter:
    a. Exposed and Concealed Minimum: 3/4 inch.
    b. Underground Minimum: 1 inch.
2. Outdoor, Exposed: PVC-coated rigid galvanized steel.
3. Indoor, Exposed:
    a. Rigid galvanized steel 5 feet and higher above finished floor.
    b. PVC-coated rigid galvanized steel below 5 feet above finished floor.
4. Indoor, Concealed (Not Embedded in Concrete): Rigid galvanized steel.
5. Aboveground, Embedded in Concrete Walls, Ceilings, or Floors: Rigid galvanized steel.
6. Direct Earth Burial:
    a. PVC Schedule 40.
    b. PVC-coated rigid galvanized steel.
7. Under Slabs-On-Grade: Rigid galvanized steel.
8. Corrosive Areas: PVC-coated rigid galvanized steel.
9. Classified Areas: PVC-coated rigid galvanized steel.

D. Connections:

1. For motors-, wall-, or ceiling-mounted fans and unit heaters, dry type transformers, electrically operated valves, instrumentation, and other equipment where flexible connection is required to minimize vibration:
   a. General: Flexible nonmetallic or metallic, liquid-tight conduit.
   b. Hazardous Areas: Flexible coupling suitable for Class I, Division 1 and 2 areas.
   c. Wet or Corrosive Areas: Flexible nonmetallic or metallic liquid-tight.
   d. Length: 18 inches minimum, 60 inches maximum, sufficient to allow movement or adjustment of equipment.
2. Lighting Fixtures in Dry Areas: Flexible nonmetallic or metallic, liquid-tight conduit.
3. Outdoor areas, process areas exposed to moisture, and areas required to be oiltight and dust-tight: Flexible nonmetallic or metallic, liquid-tight conduit.
4. Transition From Underground, Under Floor Slab, Under Equipment Mounting Pad, or Concrete Embedded to Exposed: PVC-coated rigid steel conduit from 6 inches above to 12 or more inches below top of grade or slab.
5. Under Equipment Mounting Pads: Rigid galvanized steel conduit.
6. Exterior Light Pole Foundations: PVC Schedule 40 conduit.

E. Penetrations:

1. Make at right angles, unless otherwise shown.
2. Notching or penetration of structural members, including footings and beams, not permitted.
3. Fire-Rated Walls, Floors, or Ceilings: Firestop openings around penetrations to maintain fire-resistance rating using fire penetration seal.
4. Concrete Walls, Floors, or Ceilings (Aboveground): Provide nonshrink grout dry-pack.
5. Entering Structures:
   a. General: Seal raceway at the first box or outlet with oakum or expandable plastic compound to prevent the entrance of gases or liquids from one area to another.
   b. Concrete Roof or Membrane Waterproofed Wall or Floor: Provide watertight seal.
   c. Heating, Ventilating, and Air Conditioning Equipment:
      1) Penetrate equipment in area established by manufacturer.
      2) Terminate conduit with flexible metal conduit at junction box or condulet attached to exterior surface of equipment prior to penetrating equipment.
      3) Seal penetration with Type 5 sealant, a one-part polyurethane, immersible sealant.

d. Corrosive-Sensitive Areas:
   1) Seal all conduit passing through chlorine and ammonia room walls.
   2) Seal conduit entering equipment panelboards and field panels containing electronic equipment.
   3) Seal penetration with Type 5 sealant, a one-part polyurethane, immersible sealant.
e. Existing or Precast Wall (Underground): Core drill wall and install watertight entrance seal device.
f. Nonwaterproofed Wall or Floor (Underground, without Concrete Encasement):
   1) Provide Schedule 40 galvanized pipe sleeve or watertight entrance seal device.
   2) Fill space between raceway and sleeve with expandable plastic compound or oakum and lead joint on each side.
g. Handholes:
   1) Metallic Raceways: Provide insulated grounding bushings.
   2) Nonmetallic Raceways: Provide bell ends flush with wall.

F. Support:

1. Support from structural members only, at intervals not exceeding NFPA 70 requirements, and in any case not exceeding 8 feet. Do not support from piping, pipe supports, or other raceways.
2. Multiple Adjacent Raceways: Provide ceiling trapeze.
3. Application/Type of Conduit Strap:
   a. Steel Conduit: Zinc-coated steel, pregalvanized steel, or malleable iron.
   b. PVC-Coated Rigid Steel Conduit: PVC-coated metal.
   c. Nonmetallic Conduit: Nonmetallic or PVC-coated metal.
4. Provide and attach wall brackets, strap hangers, or ceiling trapeze as follows:
   a. Wood: Wood screws.
   b. Hollow Masonry Units: Toggle bolts.
   c. Concrete or Brick: Expansion shields, or threaded studs driven in by powder charge, with lock washers and nuts.
   d. Steelwork: Machine screws.
   e. Location/Type of Hardware:
      1) Dry, Noncorrosive Areas: Galvanized.
      2) Wet, Noncorrosive Areas: Stainless steel.
      3) Corrosive Areas: Stainless steel.

G. Bends:

1. Install concealed raceways with a minimum of bends in the shortest practical distance.
2. Make bends and offsets of longest practical radius. Bends in conduits and ducts being installed for fiber optic cables shall be not less than 20 times cable diameter, 15 inches minimum.
3. Install with symmetrical bends or cast metal fittings.
4. Avoid field-made bends and offsets, but where necessary, make with acceptable hickey or bending machine. Do not heat metal raceways to facilitate bending.
5. Make bends in parallel or banked runs from same center or centerline with same radius so that bends are parallel.
6. Factory elbows may be installed in parallel or banked raceways if there is change in plane of run and raceways are same size.
7. PVC Conduit:
   a. Bends 30 Degrees and Larger: Provide factory-made elbows.
   b. Use manufacturer's recommended method for forming smaller bends.
8. Flexible Conduit: Do not make bends that exceed allowable conductor bending radius of cable to be installed or that significantly restricts conduit flexibility.

H. Expansion and Deflection Fittings: Provide on all raceways at structural expansion joints and in long tangential runs.

I. PVC Conduit:

1. Solvent Welding:
   a. Provide manufacturer recommended solvent; apply to all joints.
   b. Install such that joint is watertight.
2. Adapters:
   a. PVC to Metallic Fittings: PVC terminal type.
   b. PVC to Rigid Metal Conduit: PVC female adapter.
3. Belled-End Conduit: Bevel the unbelled end of the joint prior to joining.

J. PVC-Coated Rigid Steel Conduit:

1. Install in accordance with manufacturer's instructions.
2. All tools and equipment used in the cutting, bending, threading, and installation of PVC-coated rigid steel conduit shall be designed to limit damage to the PVC coating.
3. Provide PVC boot to cover all exposed threading.

K. Termination at Enclosures:

1. Cast Metal Enclosure: Provide manufacturer's premolded insulating sleeve inside metallic conduit terminating in threaded hubs.
2. Nonmetallic, Cabinets, and Enclosures: Terminate conduit in threaded conduit hubs, maintaining enclosure integrity.
3. Sheet Metal Boxes, Cabinets, and Enclosures:
    a. Rigid Galvanized Conduit:
        1) Provide one lock nut each on inside and outside of enclosure.
        2) Install grounding bushing.
        3) Provide bonding jumper from grounding bushing to equipment ground bus or ground pad; if neither ground bus nor pad exists, connect jumper to lag bolt attached to metal enclosure.
        4) Install insulated bushing on ends of conduit where grounding is not required.
        5) Provide insulated throat when conduit terminates in sheet metal boxes having threaded hubs.
        6) Utilize sealing locknuts or threaded hubs on outside of NEMA 3R and NEMA 12 enclosures.
        7) Terminate conduits with threaded conduit hubs at NEMA 4X boxes and enclosures.
    b. Flexible Metal Conduit: Provide two-screw type, insulated, malleable iron connectors.
    c. PVC-Coated Rigid Galvanized Steel Conduit: Provide PVC-coated, liquid-tight, metallic connector.
    d. PVC Schedule 40 Conduit: Provide PVC terminal adapter with locknut.
4. Free-Standing Enclosures:
    a. Terminate metal conduit entering bottom with grounding bushing; provide a grounding jumper extending to equipment ground bus or grounding pad.
    b. Terminate PVC conduit entering bottom with bell end fittings.

L. Underground Raceways:

1. Grade: Maintain minimum grade of 4 inches in 100 feet, either from one handhole or pull box to the next, or from a high point between them, depending on surface contour.
2. Cover: Maintain minimum 2-foot cover above conduit, unless otherwise shown on the Drawings.
3. Make routing changes as necessary to avoid obstructions or conflicts.
4. Couplings: In multiple conduit runs, stagger so couplings in adjacent runs are not in same transverse line.
5. Union type fittings not permitted.

6. Spacers:
    a. Provide preformed, nonmetallic spacers, designed for such purpose, to secure and separate parallel conduit runs in a trench.
    b. Install at intervals not greater than that specified in NFPA 70 for support of the type conduit used, but in no case greater than 10 feet.
7. Support conduit so as to prevent bending or displacement during backfilling.
8. Installation with Other Piping Systems:
    a. Crossings: Maintain minimum 12-inch vertical separation.
    b. Parallel Runs: Maintain minimum 12-inch separation.
    c. Installation over valves or couplings not permitted.
9. Metallic Raceway Coating: Along entire length, coat with raceway coating.
10. Provide expansion fittings that allow minimum of 4 inches of movement in vertical conduit runs from underground where exposed conduit will be fastened to or will enter building or structure.
11. Provide deflectional/expansion fittings in conduit runs that exit building or structure belowgrade. Conduit from building wall to fitting shall be PVC-coated rigid steel.
12. Backfill: Do not backfill until inspected by Engineer.

M. Empty Raceways:

1. Provide permanent, removable cap over each end.
2. Provide PVC plug with pull tab for underground raceways with end bells.
3. Provide nylon pull cord.
4. Identify, as specified in Article Identification Devices, with waterproof tags attached to pull cord at each end, and at intermediate pull point.

N. Identification Devices:

1. Raceway Tags:
    a. Identify origin and destination.
    b. Install at each terminus, near midpoint, and at minimum intervals of every 50 feet of exposed raceway, whether in ceiling space or surface mounted.
    c. Provide corrosion-resistant wire or nylon strap for attachment.
2. Warning Tape: Install approximately 12 inches above underground or concrete-encased raceways. Align parallel to, and within 12 inches of, centerline of runs.

O. Raceway Band:

1. Install wherever metallic conduit emerges from concrete slabs. Not required with PVC-coated RGS conduit. Center band at slab surface and install according to manufacturer's instructions.
   a. Slip-on Type: Clean conduit surface at installation location. Cut tubing to 4-inch minimum lengths and slip onto raceway prior to slab placement and termination of conduit. Heat-shrink onto conduit.
   b. Wrap-around Type: Use where slip-on access to conduit is not possible. Clean conduit surface at installation location. Apply primer. Apply wraps to provide two layers of tape. Neatly finish tape end to prevent unraveling.

1.76 METAL WIREWAYS

A. Install in accordance with manufacturer's instructions.

B. Locate with cover on accessible vertical face of wireway, unless otherwise shown.

1.77 CONDUCTORS AND CABLES

A. Conductor storage, handling, and installation shall be in accordance with manufacturer's recommendations.

B. Do not exceed manufacturer's recommendations for maximum pulling tensions and minimum bending radii.

C. Conduit system shall be complete prior to drawing conductors. Lubricate prior to pulling into conduit. Lubrication type shall be as approved by conductor manufacturer.

D. Terminate all conductors and cables, unless otherwise shown.

E. Do not splice conductors, unless specifically indicated or approved by Engineer in writing.

F. Bundling: Where single conductors and cables in handholes, vaults, and other indicated locations are not wrapped together by some other means, bundle conductors from each conduit throughout their exposed length with cable ties placed at intervals not exceeding 12 inches.

G. Wiring within Equipment and Local Control Panels: Remove surplus wire, dress, bundle, and secure.

H. Power Conductor Color Coding:

1. No. 6 AWG and Larger: Apply general purpose, flame retardant tape at each end, and at accessible locations wrapped at least six full overlapping turns, covering an area 1-1/2 to 2 inches wide.

2. No. 8 AWG and Smaller: Provide colored conductors.
3. Colors:
    a. Neutral Wire: White.
    b. Live Wires, 120/240-Volt, Single-Phase System: Black, red.
    c. Live Wires, 208Y/120-Volt, Three-Phase System: Black, red, or blue.
    d. Live Wires, 480Y/277-Volt, Three-Phase System: Brown, orange, or yellow.
    e. Ground Wire: Green.

I. Circuit Identification:

1. Assign circuit name based on device or equipment at load end of circuit. Where this would result in same name being assigned to more than one circuit, add number or letter to each otherwise identical circuit name to make it unique.
2. Method: Identify with sleeves. Taped-on markers or tags relying on adhesives not permitted.

J. Connections and Terminations:

1. Install wire nuts only on solid conductors.
2. Install nylon self-insulated crimp connectors and terminators for instrumentation and control circuit conductors.
3. Tape insulate all uninsulated connections.
4. Install crimp connectors and compression lugs with tools approved by connector manufacturer.

1.78 GROUNDING

A. Grounding shall be in compliance with NFPA 70 and as shown.

B. Ground electrical service neutral at service entrance equipment to supplementary grounding electrodes.

C. Ground each separately derived system neutral to nearest effectively grounded building structural steel member or separate grounding electrode.

D. Bond together system neutrals, service equipment enclosures, exposed noncurrent-carrying metal parts of electrical equipment, metal raceways, ground conductor in raceways and cables, receptacle ground connections, and metal piping systems.

E. Shielded Instrumentation Cables:

1. Ground shield to ground bus at power supply for analog signal.

2. Expose shield minimum 1 inch at termination to field instrument and apply heat shrink tube.
3. Do not ground instrumentation cable shield at more than one point.

F. Equipment Grounding Conductors: Provide in all conduits containing power conductors and control circuits above 50 volts.

G. Ground Rods: Install full length with conductor connection at upper end. Install one ground rod in each handhole.

1.79 LOW VOLTAGE MOTOR CONTROL

A. Install equipment in accordance with NEMA ICS 2.3 and manufacturer's instructions and recommendations.

B. Field adjust trip settings of motor starter magnetic-trip-only circuit breakers. Adjust to approximately 11-times motor rated current.

C. Select and install overload relay heaters or adjust electronic overload protection after the actual nameplate full-load current rating of motor has been determined.

1.80 LUMINAIRES AND ACCESSORIES

A. Install in accordance with manufacturer's recommendations.

B. Install plumb and level at mounting heights shown.

C. Provide proper hangers, pendants, and canopies as necessary for complete installation and meeting specified seismic requirements.

D. Pole Mounted Fixtures: Provide cast-in-place concrete bases as shown on the Drawings.

E. Install symmetrically with suspended ceiling pattern in finished areas.

F. Unfinished Areas: Locate luminaires to avoid conflict with other building systems or blockage of luminaire light output.

G. Building Exterior: Provide flush-mounted back box and concealed conduit, unless otherwise shown.

1.81 LIGHTING CONTROL

A. Outdoor Luminaires: Photocells shall switch lights ON at dusk and OFF at dawn.

TESTING

2930.60 FIELD QIUALITY CONTROL

1.82 FIELD QUALITY CONTROL

A. General:

1. Test equipment shall have an operating accuracy equal to, or greater than, requirements established by NETA ATS.
2. Test instrument calibration shall be in accordance with NETA ATS.
3. Perform inspection and electrical tests after equipment has been installed.
4. Perform tests with apparatus de-energized whenever feasible.
5. Inspection and electrical tests on energized equipment are to be:
   a. Scheduled with Engineer and Agency prior to de-energization.
   b. Minimized to avoid extended period of interruption to the operating plant equipment.

B. Tests and inspection shall establish that:

1. Electrical equipment is operational within industry and manufacturer's tolerances.
2. Installation operates properly.
3. Equipment is suitable for energization.
4. Installation conforms to requirements of Contract Documents and NFPA 70.

C. Perform inspection and testing in accordance with NETA ATS, industry standards, and manufacturer's recommendations.

D. Adjust mechanisms and moving parts for free mechanical movement.

E. Adjust adjustable relays and sensors to correspond to operating conditions, or as recommended by manufacturer.

F. Verify nameplate data for conformance to Contract Documents.

G. Realign equipment not properly aligned and correct unlevelness.

H. Properly anchor electrical equipment found to be inadequately anchored.

I. Tighten accessible bolted connections, including wiring connections, with calibrated torque wrench to manufacturer's recommendations, or as otherwise specified.

J. Clean contaminated surfaces with cleaning solvents as recommended by manufacturer.

K. Provide proper lubrication of applicable moving parts.

L. Investigate and repair or replace:

1. Electrical items that fail tests.
2. Active components not operating in accordance with manufacturer's instructions.
3. Damaged electrical equipment.

M. Electrical Enclosures:

1. Remove foreign material and moisture from enclosure interior.
2. Vacuum and wipe clean enclosure interior.
3. Remove corrosion found on metal surfaces.
4. Repair or replace, as determined by Engineer, door and panel sections having damaged surfaces.
5. Replace missing or damaged hardware.

N. Provide certified test report(s) documenting the successful completion of specified testing. Include field test measurement data.

O. Test the following equipment and materials:

1. Conductors: Insulation resistance on all power circuits with a 500-volt megger.
2. Panelboards, switches, and circuit breakers.
3. Motor controls.
4. Grounding electrodes.
5. Motors.

P. Controls:

1. Test control and signal wiring for proper termination and function.
2. Test local control panels and other control devices for proper terminations, configuration and settings, and functions.
3. Functional Tests: Functionally test for proper operation all local and remote controls, indicating lights, protective devices and features, alarms and shut down of all equipment.
4. Demonstrate control, monitoring, and indication functions in presence of Agency and Engineer.

Q. Balance electrical load between phases on panelboards and mini-power centers after installation.

R. Voltage Testing:

1. When installation is complete and facility is in operation, check and record voltage at point of termination of electric utility supply system to Project.

2. Check voltage amplitude and balance between phases for loaded and unloaded conditions and submit a report of the recorded values.
3. Record supply voltage for 24 continuous hours.
4. If unbalance exceeds 1 percent, or if voltage varies throughout the day and from loaded to unloaded conditions more than plus or minus 4 percent of nominal, make written request to electric utility to correct condition.
5. If corrections are not made, obtain written statement from a responsible electric utility official that voltage variations and/or unbalance are within their normal standards.

S. Equipment Line Current:

1. Check line current in each phase for each piece of equipment.
2. If electric utility makes adjustments to supply voltage magnitude or balance, make line current check after adjustments are made.

T. Metering:

1. Visual and Mechanical Inspection:
   a. Verify meter connections in accordance with appropriate diagrams.
   b. Verify meter multipliers.
   c. Verify that meter types and scales conform to Contract Documents.
   d. Check calibration of meters at cardinal points.

U. Grounding Systems:

1. Visual and Mechanical Inspection:
   a. Equipment and circuit grounds in panelboard for proper connection and tightness.
   b. Ground bus connections in panelboard for proper termination and tightness.
   c. Effective equipment grounding.
   d. Accessible connections to grounding electrodes for proper fit and tightness.
   e. Accessible exothermic-weld grounding connections to verify that molds were fully filled and proper bonding was obtained.
2. Electrical Tests:
   a. Fall-of-Potential Test:
      1) In accordance with IEEE 81, Section 8.2.1.5 for measurement of main ground system's resistance.
      2) Main ground electrode system resistance to ground to be no greater than 1 ohm.

V. Low Voltage Surge Arrestor:

1. Visual and Mechanical Inspection:
   a. Adequate clearances between arrestors and enclosures.
   b. Ground connections to ground electrode.
2. Electrical Tests (Varistor Type Arrestors):
   a. Clamping voltage test.
   b. Rated RMS voltage test.
3. Rated dc voltage test.
4. Varistor arrestor test values in accordance with ANSI C62.33, Sections 4.4 and 4.7.

END OF SECTION

SECTION 02940
ENGINE GENERATOR SET

DESCRIPTION

SCOPE

REFERENCES

A. The following is a list of standards which may be referenced in this section:

1. ASTM International (ASTM): A335/A335M, Specification for Seamless Ferritic Alloy-Steel Pipe for High-Temperature Service.
2. Code of Federal Regulations (CFR): Title 40 Volume 18, Control of Emissions from New and In-Use Non-road Compression-Ignition Engines.
3. Institute of Electrical and Electronics Engineers (IEEE): C37.90.1, Standard for Surge Withstand Capability (SWC) Tests for Relays and Relay Systems Associated with Electric Power Apparatus.
4. International Organization for Standardization (DIN/ISO): 9001, Quality Management Systems—Fundamentals and Vocabulary.
5. National Electric Manufacturer's Association (NEMA):
   a. 250, Enclosures for Electrical Equipment (1,000 Volts Maximum).
   b. ICS 1, General Standards for Industrial Control and Systems: General Requirements.
   c. ICS 2, Industrial Control and Systems Controllers, Contactors, and Overload Relays, Rated Not More Than 2000 Volts AC or 750 Volts DC.
   d. MG 1, Motors and Generators.
6. National Electrical Contractors Association (NECA): 404, Recommended Practice for Installing Generator Sets.
7. National Fire Protection Association (NFPA):
   a. 37, Installation and Use of Stationary Combustion Engines and Gas Turbines.
   b. 70, National Electric Code.
   c. 110, Emergency and Standby Power Systems.
8. School of Audio Engineering (SAE): J1074, Engine Sound Level Measurement.
9. Underwriters Laboratories, Inc. (UL):
   a. 508, Industrial Control Equipment.
   b. 1008, Transfer Switch Equipment.
   c. 1236, Battery Chargers for Charging Engine-Starter Batteries.
   d. 2085, Protected Aboveground Tanks for Flammable and Combustible Liquids.
   e. 2200, Stationary Engine Generator.

1.02 GENERAL

A. This Section includes the required work to provide and install a totally complete natural gas or diesel engine generator set system. System's equipment includes engine generator set, control panel, batteries, battery charger, automatic or manual transfer switch, and all other equipment required for a fully functional electric generating unit.

1.03 SUBMITTALS

A. Submittals shall be made in accordance with Section 26 05 01, Electrical.

B. Include a copy of this electrical equipment specification section with the electrical equipment submittal. Each paragraph shall be check marked to show specification compliance or marked to show deviations. Attach a cross-referenced letter of explanation for deviations as required.

C. Action Submittals:

1. Dimensioned outline drawing showing plan and elevations of engine generator set and drive system, complete, with weatherproof enclosure and locations of all accessories.
2. Engine and generator weight, and anchoring requirements.
3. Catalog information and technical description; include materials for block, heads, valves, rings, cylinders, pistons, crankshaft, and major bearings and wear surfaces.
    a. Engine and generator manufacturers' names.
    b. Number of cylinders/in-line or vee.
    c. Bore and stroke/piston speed at rated rpm.
    d. Displacement in cubic inches.
4. Complete list of accessories provided.
5. Performance curves showing engine efficiency (fuel consumed per kWh output), gross fuel consumption rate, and kW output at design rated output, one-half load, and one-quarter load. Account for design altitude, temperature corrections, and engine parasitic loads.
6. Generator descriptive information, transient response characteristics, and transient and subtransient reactances per unit.
7. Type of generator exciter.
8. Output waveform and telephone interference factor (TIF).
9. Generator capacity in kW, kVA, and power factor.
10. NEMA MG 1-22.40 temperature rise rating of generator insulation.
11. Automatic voltage regulator manufacturer performance criteria.
12. Number and type of generator bearings.

13. Circuit breaker data, including make model, catalog number, settings, and time current curves.
14. Control panel instrument identification inscriptions.
15. Sample guarantee.
16. Electrical schematic and wiring diagrams for the following:
    a. Generator control panel.
    b. Main generator.
    c. Voltage regulator.
    d. Battery charging system.
    e. Governing system.
    f. Generator exciter.
    g. Interconnection wiring diagram for automatic transfer switch specified in Article Automatic Transfer Switch.
    h. Enclosed electrical components.
17. Engine generator set motor starting capability and percent voltage dip curve.
18. Block heater size and voltage.
19. Subbase tank size and dimensions.
20. Noise data for enclosed engine generator at 50 percent, 75 percent, and full load.
21. Automatic or Manual Transfer Switch:
    a. Descriptive product information.
    b. Dimensional drawings.
    c. Control diagrams.
    d. Conduit entrance locations.
    e. Equipment ratings.
22. Seismic anchorage and bracing drawings and cut sheets for Contractor to provide required anchorage and bracing during installation of the standby engine generator set.

D. Informational Submittals:

1. Seismic anchorage and bracing calculations.
2. Manufacturer's Certificate of compliance with specified EPA emissions requirements.
3. Certification, copies of analyses, or test reports demonstrating appropriate vibration analysis and design in all modes.
4. Certified Factory Test Reports.
5. Manufacturer's Certificate of Performance.
6. Operation and Maintenance Data.
7. Description of parts and service availability within 50 miles of the standby generator location.
8. Manufacturer's Certificate of Proper Installation.
9. Special guarantee.

1.04 QUALITY ASSURANCE

A. Authority Having Jurisdiction (AHJ):

1. Provide the Work in accordance with NFPA 70, National Electrical Code (NEC). Material and equipment shall be labeled or listed by a nationally recognized testing laboratory or other organization acceptable to the AHJ in order to provide a basis for approval under NEC.
2. Materials and equipment manufactured within the scope of standards published by Underwriters Laboratories, Inc. shall conform to those standards and shall have an applied UL listing mark.

B. Manufacturer Special Requirements:

1. Generator set shall be listed to UL 2200 or submitted to an independent third party certification process to verify compliance as installed.
2. Manufacturer of generator set shall be certified to ISO 9001 and shall have third party certification verifying quality assurance in design/development, production, installation, and service, in accordance with ISO 9001.

1.05 SPECIAL GUARANTEE

A. Provide manufacturer's guarantee or warranty with no deductibles and including travel time, service hours, repair parts and expendables (oil, filters, antifreeze and other items required for the complete repair) with Agency named as beneficiary, in writing, as special guarantee. Special guarantee shall provide for correction of the Work specified in this Specification section found defective during a period of 2 years after the date of Substantial Completion. Duties and obligations for correction or removal and replacement of defective Work as specified in the General Conditions.

B. Local warranty repair facility shall be within 50 miles of the standby engine generator set location.

1.06 EXTRA MATERIALS

A. Furnish, tag, and box for shipment and storage the following spare parts and special tools:

Item	Quantity
Diesel fuel line filter elements (if applicable)	3 complete sets

Item	Quantity
Lubricating oil filter elements with gasket	3 complete sets
Air cleaner filter element	1 complete set
Auxiliary fuel and jacket water pump packing/seals	1 complete set
Cooling fan drive belt (if applicable)	2 complete sets
Hydrometer	1 each
Two-pronged battery voltmeter	1 each
Spare fuses, if used in control panel	1 complete set
Spare indicating lamps/LED's (if applicable)	4 of each type used
Touch up paint	1 quart each color used
Special tools required to maintain or dismantle engine generator set	1 complete set

B. Engine Repair/Service Manual: Three sets.

MATERIALS

2.01 2940.10MANUFACTURERS

A. Materials and equipment specified in this section shall be products of:

1. Kohler Power Series.
2. Or approved equal with repair services within 50 miles of the standby engine generator set location.

2.02 SERVICE CONDITIONS

A. Altitude: 4,000 feet above sea level, maximum.

B. Ambient Temperature at Air Intake: 110 degrees F maximum.

C. Ambient Temperature at Engine Generator Set: 110 degrees F maximum.

2.03 GENERAL

A. Ratings:

1. Operate at 1,800 rpm.
2. Rated kW and kVA at 0.8 PF based on specified service conditions, connected load, and motor starting provisions.
3. Voltage: 480Y/277 or 240/120 volts, three-phase, 4-wire, 60-Hz.
4. Rated based on standby service.

B. Emissions: Engines shall meet emission requirements specified in 40 CFR Chapter I Part 89 for off-highway Internal Combustion (IC) engines.

C. Vibration Design:

1. Use vibration analytical techniques to determine shaft critical speeds, and to develop bearing design and shaft balancing to mitigate vibration.
2. Apply torsional analysis and design to mitigate torsional vibration.
3. Engine and generator, individually, shall not exhibit vibration in any plane exceeding 10 mils at continuous rating point, when measured at attachment points to common steel subbase.

2.04 ENGINE

A. General:

1. Manufacturer's standard design, unless otherwise specified.
2. Engine parts designed with adequate strength for specified duty.

B. Type and Rating:

1. Natural Gas Cycle: 4-stroke type with unit mounted radiator and fan cooling for units rated 25 to 150 kW where natural gas is available as a fuel supply.
2. Diesel Cycle: 4-stroke type with unit mounted radiator and fan cooling for units where natural gas is not available as a fuel supply or for units rated 175 to 750 kW.
3. Suitable for a standby output when driving a synchronous generator at a speed not exceeding 1,800 rpm sufficient to start and power the connected load with maximum starting voltage drop not to exceed 20 percent.
4. Minimum displacement shall be as recommended by generator manufacturer.
5. Minimum number of cylinders shall be as recommended by generator manufacturer.

C. Starting System:

1. Type: Automatic, using 12-volt or 24-volt battery-driven starter acting in response to control panel.

2. Starter shall be capable of three complete cranking cycles or shall have sufficient capacity to crank the engine at starting speed for 1 minute without overheating.
3. Batteries:
   a. Sized as recommended by engine manufacturer.
   b. Lead-acid type.
   c. Capable of providing 15 seconds minimum of cranking current at 0 degree C and three complete 15-second cranking cycles at 40 degrees C.
   d. Housed in acid-resistant frame or box mounted in the engine enclosure and isolated from engine generator main frame.
   e. Located such that maintenance and inspection of engine is not hindered.
   f. Complete with battery cables and connectors.
4. Battery Charger:
   a. UL 1236 listed and labeled.
   b. 10-amp automatic float, taper and equalize charge type, with plus or minus 1 percent voltage regulation over a plus or minus 10 percent input voltage variation.
   c. Input Voltage: 120V ac.
   d. Temperature compensated to operate over an ambient range of minus 30 degrees C to 50 degrees C.
   e. Locate charger adjacent to generator control panel. Generator manufacturer shall coordinate location.
   f. Include:
      1) Ammeter and voltmeter.
      2) Fused ac input and dc output.
      3) Power ON pilot light.
      4) AC failure relay and light.
      5) Low and high dc voltage alarm relay and light.
   g. Alarm relay dry contacts rated 5 amps at 120V ac.
   h. Wire battery charger status and alarm contacts back to generator control panel, terminate and identify contacts.
   i. Isolate charger from battery during engine start and run operations.

D. Fuel System:

1. Natural Gas:
   a. Carburetion shall be suitable for natural gas supply of 0.75 psig.
   b. Provide natural gas regulator as required.
   c. Provide flexible connector where gas supply piping connects to engine.
2. Diesel:

a. Engine driven, mechanical, positive displacement fuel pump.
b. Fuel filter with replaceable spin-on canister element.
c. As specified under Article, Integral Subbase Fuel Tank.
d. Fuel Connections to Engine: Flexible hose, suitable for application.

E. Governing System:

1. Electronic constant speed type.
2. Regulates speed as required to hold generating frequency within tolerable limits and within 5 percent of nominal design speed.
3. Capable of maintaining isochronous governed speed at 60 Hz at any load from no-load to full-load.
4. Capable of maintaining a steady state band width of not more than plus or minus 0.25 percent at any constant load from no-load to full-load.
5. Accessories:
   a. Manual speed control device.
   b. Positive overspeed trip switch.

F. Jacket Water Cooling System:

1. Radiator:
   a. Consisting of jacket water pump, fan assembly, fan guard, and duct flange outlet.
   b. Cooling System: Rated for full load operation as specified in Article Service Conditions.
   c. Fan: Suitable for use in a system with 0.5 in H_2O restriction.
   d. Sized based on a core temperature that is 20 degrees F higher than rated operation temperature.
2. High coolant temperature device to shut down engine through the engine generator control panel when the engine temperature exceeds 217 degrees F. Provide prealarm annunciation at the engine generator control panel at 215 degrees F.
3. Engine Thermostat: As recommended by manufacturer to regulate engine water temperature.
4. Jacket Water Heater:
   a. Suitable for operation on 120- or 240–volt, single-phase, 60-Hz current.
   b. Maintain engine water temperature at 120 degrees F with an ambient temperature of 50 degrees F.
   c. Thermostatically controlled.
   d. Externally mounted with inlet and outlet isolation valves.
5. Engine Cooling Liquid: Fill cooling system with a 50/50-ethylene glycol/water mixture prior to shipping.

G. Lubrication System:

1. Type: Full-pressure.
2. Accessories:
   a. Pressure switch to initiate shutdown on low oil pressure.
   b. Oil filter with replaceable element in addition to a bypass valve, which will allow lube oil circulation in the event of a failure of the filtering system.
   c. Bayonet type oil level stick.
   d. Valved oil drain extension.
3. Oil Cooling System: Water-cooled heat exchanger utilizing jacket water.

H. Exhaust System:

1. Muffler: Rated for residential silencing.
2. Wrap exposed length of exhaust pipe and silencer with thermal insulating wrap.
3. Exhaust Pipe: ASTM A335, Grade P11, standard wall, with fittings selected to match piping materials.
4. Pipe Connections: Welded.
5. Engine Connection:
   a. Flanged, flexible, corrugated, Type 321 stainless steel expansion fitting, specifically suited for diesel exhaust service.
   b. Length as required for flexibility and expansion in piping arrangement shown on Drawings.

I. Air Intake System: Equip with dry type air cleaner with filter service (restriction) indicator.

2.05 GENERATOR

A. General:

1. Meet requirements of NEMA MG 1.
2. Synchronous type with 2/3 pitch, amortisseur winding in rotor, revolving field, drip-proof construction, air cooled by a direct drive centrifugal blower fan.
3. Single bearing flange-mounted design with a sealed, frictionless, cartridge type bearing.
4. Engine generator coupling shall be the laminated steel, semi-flexible, piloting type.
5. Stator Windings:
   a. Skewed for smooth voltage waveform.
   b. Reconnectable, 12 lead.
6. Overspeed Capability: 125 percent.
7. Waveform Deviation from Sine Wave: 5 percent maximum.

8. Telephone Interference Factor: 50 maximum.
9. Total Harmonic Current and Voltage Distortion: 5 percent maximum, measured at generator main circuit breaker.

B. Insulation System:

1. Class H, with a maximum rise of 125 degrees C over 40 degree C ambient in accordance with NEMA MG 1.
2. Vacuum pressure impregnated (VPI) fungus resistant in accordance with MIL E-4970A.

C. Excitation System:

1. Field brushless type or permanent magnet generator (PMG) exciter.
2. PMG and Controls: Capable of providing regulated current, at a rate of 300 percent of nameplate current, to a single-phase or three-phase fault for 10 seconds.

D. Voltage Regulation:

1. Solid state, PWM, automatic voltage regulator with three-phase sensing and over- and under-voltage protection.
2. Adjustable output voltage level to plus or minus 5 percent of rated output voltage. Mount output voltage adjustment control on engine generator control panel.
3. Provisions for proper voltage regulation for existing or future adjustable frequency drives as part of generator load.
4. Conformal coating environmental protection.

E. Voltage and Frequency Regulation Performance:

1. Steady State Voltage Regulation: Less than plus or minus 1 percent from no-load to continuous rating point.
2. NEMA MG 1 Defined Transient Voltage Dip:
   a. Less than 15 percent at rapid application of rated load.
   b. Recovery to rated voltage and frequency within 2 seconds following initial load application.
3. Steady State Frequency Regulation: Plus or minus 1.5-Hz overload range.

F. Motor Starting Capability:

1. Apply loads in the order listed in the following table.

Load Table					
Step	Load Description	Rating	Type (hp, kW)	Starting Type	Largest Motor
1					
2					
3					

a. Step 1 loads start immediately upon transfer, Step 2 loads start 5 to 10 seconds after transfer, Step 3 loads start 10 to 15 seconds after transfer, etc.
b. Rating: Rated total horsepower/kW of loads that are started.
c. Type: “Rating” entry units, e.g., kW or hp.
d. Starting Type:
    1) FVNR – Full Voltage Nonreversing.
    2) SSRV – Solid-State Reduced Voltage.
    3) AFD – Adjustable Frequency Drive.

G. Short Circuit Capabilities: Sustain 300 percent of rated current for 10 seconds for external three-phase bolted fault without exceeding rated temperatures.

H. Enclosure:

1. Dripproof.
2. Anti-condensation heater suitable for operation on 120-volt, 60-Hz current (100W, maximum).

I. Main Circuit Breaker:

1. Type: Molded case or insulated case.
2. Current Rating: As recommended by generator manufacturer.
3. Interrupt Rating: As recommended by generator manufacturer.
4. Short Time Rating: As recommended by generator manufacturer.
5. Trips:
    a. Molded Case Circuit Breaker: Thermal-magnetic with inverse time characteristics and adjustable magnetic pickup.
    b. Insulated Case Circuit Breaker Adjustable Functions:
        1) Long-time current pickup.
        2) Normal range instantaneous and short-time pickup.
        3) Short-time delay with I2t function.
        4) Ground fault pickup.
        5) Ground fault delay.

6. Enclosure:
   a. Rating: NEMA 250, Type 12.
   b. Mounted with vibration isolation from engine generator set.
7. Surge Protective Devices: Three-phase capacitors and arresters mounted in terminal compartment.
8. Provide one normally open and one normally closed, 5 amps, 120-volt contact for remote indication when circuit breaker has tripped.

2.06 BASEPLATE

A. Mount engine generator set on a rigid common steel base frame.

B. Base frame shall be stiffened to minimize deflections.

2.07 INTEGRAL SUBBASE FUEL TANK (DIESEL ENGINE)

A. General:

1. Sufficient tank capacity for full load operation of generator set for 24 hours.
2. UL 2085 listed and labeled.
3. Installation shall be in compliance to NFPA 37.
4. Double-walled, steel construction, configured for full coverage of the unit base area, and shall include the following features:
   a. Emergency tank and basin vents.
   b. Mechanical level gauge (1-1/4-inch diameter).
   c. Fuel supply and return lines, connected to generator set with flexible fuel lines as recommended by engine manufacturer and in compliance to UL 2200 and NFPA 37 requirements.
   d. Leak detection provisions, wired to generator set control for local and remote alarm indication.
   e. High and low level float switches to indicate fuel level. Wire switches to generator control for local and remote indication of fuel level.
   f. Basin drain.
   g. Integral lifting provisions.
   h. Capacity (e.g., “105 GALLONS”) painted on a visible section of the tank with black letters, white letters if tank is black, 2 inches high, minimum.
   i. Fill line with dry break connection with lockable dust cap and chain, accessible from outside the engine generator weatherproof enclosure without opening the enclosure.

2.08 VIBRATION ISOLATORS

A. Performance: To meet code requirements to limit vibration transmissibility to 10 percent at each frequency.

B. Provide vibration isolators, spring/pad type, with low-profile (height-saving) vibration-isolator brackets suitable for the specified Seismic Design Criteria.

C. Include seismic restraints if required by Site location.

D. Manufacturer and Product: Korfund; Series L.

2.09 AUTOMATIC AND MANUAL TRANSFER SWITCHES

A. Automatic run controls shall be suitable for remote interface and control by an automatic transfer switch. Engine generator set shall start and run upon closure of a remote dry contact provided in the automatic transfer switch.

B. General:

1. Transfer switch to be product of a single manufacturer in order to achieve standardization for appearance, operation, maintenance, spare parts, and manufacturer's service.
2. In accordance with applicable standards of NFPA 70, NEMA ICS 1, NEMA ICS 2, IEEE C37.90.1, and UL 1008.
3. Transfer switch consisting of inherently double-throw power switch unit with interconnected control module.
4. Rated 100 percent, in amperes, for total system transfer of motor, electric heating, discharge lamp loads, and tungsten-filament lamp loads.
    a. Switches rated 400 amperes and below suitable for 100 percent tungsten-filament lamp loads.
    b. Switches rated above 400 amperes suitable for 30 percent tungsten-filament lamp loads.
5. Main and arcing contacts visible for inspection with cabinet door and barrier covers removed.
6. Suitable for 240/120 or 480 volts, three-phase, three-wire or four-wire, grounded-wye or delta electrical service having an available short circuit current at line terminals as shown on the Drawings.
7. Switch Rating: As shown on the Drawings in nonventilated enclosure.
8. Current carrying capacity of arcing contacts shall not be used to determine the transfer switch rating.
9. Suitable for use with 75 degrees C wire at full NFPA 70, 75 degrees C ampacity.

10. Operating Conditions:
    a. Maximum Ambient: 40 degrees C.
    b. Elevation: 4,000 feet above sea level.

C. Enclosure:

1. Type: Nonventilated NEMA 250, Type 12 with enclosure grounding terminal.
2. Dead front, front accessible wall or floor mounted cabinet with 14-gauge welded steel construction.
3. Continuously hinged single door, with handle and lock cylinder.
4. Finish: Baked enamel applied over rust-inhibiting, phosphated base coating.
    a. Exterior and Interior Color: Provide gray finish as approved by Agency or Engineer.
    b. Unpainted Metal Parts: Plated for corrosion resistance.

D. Transfer Switch:

1. Type: Electrically operated, mechanically held, double-throw.
2. Momentarily energized, single-electrically operated mechanism energized from source to which load is to be transferred.
3. Locking mechanism to maintain constant contact pressure.
4. Mechanical interlock switch to ensure only one of two possible switch positions or time delay in neutral position.
5. Silver alloy contacts protected by arcing contacts.
6. Main and arcing contacts visible when door is open and barrier covers removed.
7. Manual operating handle for transfer in either direction under either loaded or unloaded conditions.
8. Internal control wire connections made with ring or spade type terminals, lock washers, and sleeve type marking labels.

E. Control Module (Automatic Transfer Switch Only):

1. Completely enclosed and mounted separately from the transfer switch unit.
2. Microprocessor for sensing and logic control with inherent digital communications capability.
3. Plug-in, industrial grade interfacing relays with dust covers.
4. Connected to transfer switch by wiring harness having keyed disconnect plug.
5. Plug-in printed circuit boards for sensing and control logic.
6. Adjustable solid state undervoltage sensors for all three phases of utility and for one phase of standby source:
    a. Pickup 85 to 100 percent nominal.
    b. Dropout 75 to 98 percent of pickup setting.
7. Adjustable frequency sensors for standby source:

a. Pickup 90 to 100 percent nominal.
b. Dropout 87 to 89 percent of pickup setting.

8. Control module with adjustable time delays:
   a. 0.5- to 6-second engine start delay.
   b. 0- to 5-minute load transfer to emergency delay.
   c. 0- to 30-minute retransfer to normal delay.
   d. 0- to 30-minute unload running time delay.
   e. Switch to bypass any of the above time delays during testing.
9. Form-C start contacts, rated 10 amperes, 32-volt dc, for two-wire engine control, wired to terminal block.
10. Exerciser, adjustable in 15-minute increments, 7-day dial clock to automatically exercise generator without load transfer, complete with door mounted NO LOAD and LOAD selector switch.
11. In-phase monitor to control transfer when both sources are within acceptable phase angle limits, or adjustable pneumatic type time delay relay for time-delay-in neutral position.
12. Adjustable 0 to 5 minutes time delay relay for engine starting signal.

F. Metering Instruments:

1. Meters to be connected to load side of transfer switch.
2. Ammeter: 3-1/2-inch, 2 percent accuracy, panel type with current transformers, three-phase, line-to-line, OFF, four-position selector switch.
3. Voltmeter: 3-1/2-inch, 2 percent accuracy, panel type with three-phase, line-to-line, OFF, four-position selector switch and 300- or 600-volt scale.

G. Indicators:

1. Type: Clustered light-emitting diodes.
2. Green lens to indicate switch position for utility power source.
3. Red lens to indicate switch position for standby power source.
4. White lens to indicate utility power source is available within parameters established by pickup and dropout settings.
5. Amber lens to indicate standby power source is available within parameters established by pickup and dropout settings.
6. Provide one normally open and one normally closed, 5 amperes, 120-volt contact for remote indication when transfer switch is in either position.

H. Factory Tests:

1. Test to Ensure Correct:
   a. Operation of individual components.
   b. Sequence of operation.

c. Transfer time, voltage, frequency, and time delay settings.

2. Dielectric strength test per NEMA ICS 1.

2.10 CONTROL SYSTEM

A. Control Panel:

1. Rating: NEMA 250, Type 12.
2. Material: Steel.
3. Instrument Identification: Face label or engraved, white, laminated plastic nameplate with black 1/4-inch-high letters, attached with Type 422 stainless steel screws.
4. UL 508 listed.
5. Tested to meet or exceed IEEE 587 requirements for voltage surge resistance.
6. Controls shall be solid-state, microprocessor based. Control panel shall be designed and built by generator manufacturer and shall provide operating, monitoring, and control functions for generator set.
7. Control panel mounting height shall not exceed 6 feet 6 inches above where personnel will access panel. Manufacturer shall modify mounting height if a sub-base fuel tank is used.
8. Platform for control panel shall satisfy all NEC Article 110.26(A)(1) Electrical Equipment Working Space requirements.
9. Anti-condensation heater suitable for operation on 120-volt, 60-Hz current (100W, maximum).

B. Instrumentation:

1. Type: Suitable for engine-mounted vibration environment.
2. Mounting: Nonshock mounted.
3. Alarm and Signal Contacts: Rated 5 amps at 120V ac, dry.
4. Fault Indication Lamps: Push-to-test LED type.
5. Meters: Analog, 3.5 inches, 240-degree scale, plus or minus 2 percent accuracy.

C. Operator Controls and Indicators:

1. HANDCRANK/STOP/AUTO/ENGINE TEST selector switch.
2. Generator voltage adjustment.
3. Voltmeter PHASE SELECTOR switch.
4. Ammeter PHASE SELECTOR switch.
5. Voltmeter.
6. Ammeter.
7. Kilo-Watts (kW).
8. Power Factor.
9. FREQUENCY meter.
10. Engine OIL PRESSURE indicator.

11. Engine jacket WATER TEMPERATURE indicator.
12. Engine SPEED indicator (RPM).
13. Fuel LEVEL indicator (diesel only).
14. Fuel PRESSURE indicator.
15. Engine OIL TEMPERATURE indicator.
16. RUNNING TIME indicator.
17. DC battery voltage.
18. DC battery charge rate ammeter.
19. Emergency Stop button.

D. Alarm Indicators with Manual Pushbutton RESET:

1. Low oil pressure.
2. High jacket water temperature.
3. Engine overspeed.
4. Engine overcrank.
5. Low/high dc voltage.
6. Fuel tank leak (diesel only).
7. Fuel tank low level (diesel only).

E. External Interfaces:

1. Furnish a single, common DPDT relay output when an alarm (TROUBLE) condition occurs.
2. Furnish a single, common DPDT relay output when an engine shutdown (FAIL) condition occurs.
3. Furnish a single, DPDT relay output when the “ENGINE IS RUNNING” (ON).
4. Furnish a single, DPDT relay output when the HANDCRANK/ STOP/AUTO/ENGINE TEST selector switch is NOT in the AUTO position.
5. Furnish a single, DPDT relay output when the “FUEL TANK LEAK” alarm is activated.
6. Furnish a single, DPDT relay output when the “FUEL TANK LOW LEVEL” alarm is activated.
7. Output: Dry contact rated 5 amps at 120V ac.
8. Accept remote dry start contact closure from automatic transfer switch, rated 10 amps at 32V dc.

F. Functional Requirements:

1. LCD text display of alarm/event descriptions.
2. Recranking Lockout: When engine fires, starting control shall automatically disconnect cranking control to prevent recranking for a preset period of time after engine stop.
3. Overcranking Lockout: Initiate after four cranking cycles of 10 seconds on and 10 seconds off or provide continuous cranking cycle with crank time limiter.

4. Alarms:
    a. Low coolant level.
    b. Low fuel level (diesel only).
    c. Low oil pressure.
    d. High jacket water temperature.
    e. Low battery voltage.
    f. High battery voltage.
    g. Battery charger failure.
    h. Fuel tank leak (diesel only).
5. Engine shutdown upon any of the following conditions:
    a. Engine overspeed.
    b. Emergency stop button depressed.
    c. High jacket water temperature alarm setpoint and shutdown setpoint.
    d. Low oil pressure alarm setpoint and shutdown setpoint.
    e. Overcrank.
6. Air Inlet Damper Opening:
    a. Upon engine start sequence initiation, a normally closed, dry contact, rated 5 amps at 120V ac, from engine start circuit shall open to provide a signal to open air inlet dampers.
    b. Air inlet dampers shall fail open (energized closed).

G. Special Requirements: Mount battery charger adjacent to and facing the same direction as the control panel and match generator instrumentation.

H. Power Requirements: Manufacturer's standard internally connected.

2.11 OUTDOOR WEATHER-PROTECTIVE ENCLOSURE

A. General:

1. Provide generator set with outdoor enclosure, with entire package listed under UL 2200.
2. Package shall comply with requirements of NEC for wiring materials and component spacing.
3. Design total assembly of generator set, enclosure, and subbase fuel tank (when used) to be lifted into place using spreader bars.
4. Housing:
    a. Provide ample airflow for generator set operation at rated load in ambient temperature of 100 degrees F.
    b. Doors:
        1) Hinged access doors as required to maintain easy access for operating and service functions.
        2) Lockable and include retainers to hold door open during service.
5. Roof: Cambered to prevent rainwater accumulation.

6. Openings: Screened to limit access of birds and rodents into enclosure with gravity-operated air discharge louvers.
7. Electrical power and control interconnections shall be made within perimeter of enclosure.
8. Finishes:
    a. Prime sheet metal for corrosion protection and finish painted with manufacturer's standard color using a two-step electrocoating paint process, or equal meeting performance requirements specified below.
    b. Prime and paint surfaces of metal parts. Painting process shall result in coating that meets the following requirements:
        1) Primer: 0.5 mil to 2.0 mils thick.
        2) Top Coat: 0.8 mil to 1.2 mils thick.
        3) Gloss:
            a) Per ASTM D523, 80 percent plus or minus 5 percent.
            b) Gloss retention after 1 year shall exceed 50 percent.
        4) Crosshatch Adhesion: Per ASTM D3359, 4B-5B.
        5) Impact Resistance: Per ASTM D2794, 120-inch to 160-inch pounds.
        6) Salt Spray: Per ASTM B117, plus 1,000 hours.
        7) Humidity: Per ASTM D2247, plus 1,000 hours.
        8) Water Soak: Per ASTM D2247, plus 1,000 hours.
    c. Painting of hoses, clamps, wiring harnesses, and other nonmetallic service parts shall not be acceptable.
    d. Fasteners used shall be corrosion-resistant and designed to minimize marring of painted surface when removed for normal installation or service work.
9. Enclosure shall be constructed of minimum 12-gauge steel for framework and 14-gauge steel for panels.
10. Hardware and hinges shall be austenitic stainless steel.
11. Exhaust Silencer:
    a. Install factory-mounted exhaust silencer inside enclosure.
    b. Exhaust shall exit enclosure through a rain collar and terminate with a rain cap.
    c. Exhaust connections to generator set shall be through seamless flexible connections.
12. Maintenance Provisions:
    a. Flexible coolant and lubricating oil drain lines that extend to exterior of enclosure, with internal drain valves.
    b. External radiator-fill provision.
    c. External fuel fill provision (if equipped with a subbased fuel tank). See Subsection 2.07, Integral Subbase Fuel Tank (Diesel Engine).
13. Provide motorized louvers powered off the 120-volt battery charger circuit to minimize air flow through enclosure when

generator set is not operating. Louvers shall include provisions to prevent accumulation of ice or snow that might prevent operation.

14. Inlet ducts shall include rain hoods.
15. Provide external emergency stop switch that is protected from accidental actuation.
16. Provide factory mounted and wired electrical auxiliary power distribution panel to serve generator set and enclosure. Provisions required include:
    a. 100-amp distribution panelboard connected to a 120/240V ac utility service.
    b. Two duplex GFCI receptacles, one inside enclosure, and one weatherproof receptacle on outside of enclosure.
    c. Two three-way switches controlling three ac lamps mounted in vapor tight and gasketed fixtures.
    d. Factory-wired normal ac service from panelboard to engine coolant, alternator and control panel heaters, and battery charger.
17. Sound Attenuation:
    a. Provide with sound-attenuated housing which allows generator set to operate at full rated load in an ambient temperature of up to 100 degrees F.
    b. Enclosure shall reduce sound level of generator set while operating at full rated load to a maximum of 74 dBA at any location 7 meters from generator set in a free field environment when tested in accordance with SAE J1074.
    c. Insulate enclosure with nonhydroscopic materials.
18. Auxiliary Power Receptacle:
    a. Provide a 12V dc, automotive (cigarette lighter type) receptacle with weatherproof cover. Mount the receptacle on a stationary part of the weatherproof enclosure (accessible from outside the enclosure) near the starting control panel.
    b. Wire the receptacle directly to the battery.
    c. Provide two plugs that match the receptacle for use on portable light cords provided by others.

2.12 FACTORY FINISHING

A. Engine Generator Set and Instrument Panel: Factory-applied primer and two finish coats of manufacturer’s standard heat-resistant engine paint.

2.13 FACTORY TESTS

A. General: Conform to NFPA 110.

B. Steady Load Test: Test engine generator set at steady load run of 60 minutes minimum duration at 100 percent full-rated load.

C. Transient Load Test: Conduct transient load test to demonstrate ability to meet load pickup and load release requirements specified.

D. Harmonic Test: Conduct at full load conditions.

E. Record and Report:

1. Strip chart recording and full harmonic analysis measuring up to 50th harmonic for both voltage and current and three phases simultaneously.
2. Transient response.
3. Load/speed stability.
4. Engine fuel consumption.
5. Power output.
6. Harmonic analysis.

CONSTRUCTION

3.01 2940.40 INSTALLATION

A. Level and securely mount engine generator set in accordance with manufacturer's recommendations.

B. Install in accordance with NECA 404.

C. Where applicable, mount engine generator set on vibration isolators in accordance with isolator manufacturer's recommendations.

D. Automatic and Manual Transfer Switches:

1. Install in accordance with manufacturer's instructions.
2. Secure enclosure to floor using anchor bolts or structural steel channels attached to wall surface of sufficient size and number adequate for specified seismic conditions.

3.02 FIELD FINISHING

A. Touch up damaged coating with paint system compatible to existing.

TESTING

3.03 2940.60 FIELD TESTS

A. General: Conform to NFPA 110.

B. Visual and Mechanical Inspection:

1. Proper grounding.
2. Blockage of ventilating passageways.

3. Integrity of engine cooling and fuel supply systems.
4. Excessive mechanical and electrical noise.
5. Overheating of engine or generator.
6. Proper installation of vibration isolators.
7. Proper cooling liquid type and level.
8. Operate Engine-Generator and Check For:
    a. Excessive mechanical and electrical noise.
    b. Overheating.
    c. Correct rotation.
    d. Check resistance temperature detectors or generator inherent thermal protectors for functionability and proper operation.
    e. Excessive vibration.
9. Verify that voltage regulator and governor operation will cause unit speed and output voltage to stabilize at proper values within reasonable length of time.
10. Proper operation of meters and instruments.
11. Compare generator nameplate rating and connection with one-line diagram.

C. Electrical and Mechanical Tests:

1. Cold start test by interrupting normal power source with test load consisting of connected building load to verify:
    a. Transfer switch operation.
    b. Automatic starting operation.
    c. Operating ability of engine-generator.
    d. Overcurrent devices capability to withstand inrush currents.
2. Phase rotation tests.
3. Test Engine Protective Shutdown Features For:
    a. Low oil pressure.
    b. Overtemperature.
    c. Overspeed.
4. Vibration base-line test levels in accordance with manufacturer's recommendations.

D. Performance Test:

1. Perform upon completion of installation.
2. Operate 2 hours minimum.
3. Manufacturer’s representative shall make necessary adjustments.
4. Demonstrate ability of engine generator set to carry specified loads.
5. Demonstrate engine generator set safety shutdowns.

E. Test Report: Record and report the following:

1. Electric load on generator.

2. Fuel consumption.
3. Exhaust temperature.
4. Ambient air temperature.
5. Safety shutdown performance results.
6. Noise levels at 7 meters and at the closest property line.

F. Post-test Requirements:

1. Make final adjustments.
2. Replace fuel and oil filters.
3. Check belt drive tensions.
4. Demonstrate proper operation of equipment, including automatic operation with control from automatic transfer switch, to Engineer and Agency.

G. Transfer Switches:

1. Visual and Mechanical Inspection:
   a. Check doors and panels for proper interlocking.
   b. Check connections for high resistance by low resistance ohmmeter and calibrated torque wrench applied to bolted joints.
   c. Check positive mechanical and electrical interlock between normal and alternate sources.
   d. Check for proper operation:
      1) Manual transfer function switch.
      2) Generator under load and nonload conditions.
      3) Auto-exerciser of generator under load and no-load conditions.
   e. Verify settings and operation of control devices.
2. Electrical Tests:
   a. Insulation Resistance Tests:
      1) Applied megohmmeter dc voltage in accordance with NETA ATS, Table 100.1 for each phase with switch CLOSED in both source positions.
      2) Phase-to-phase and phase-to-ground for 1 minute.
      3) Test values in accordance with manufacturer's published data.
   b. Contact Resistance Test:
      1) Contact resistance in microhms across each switch blade for both source positions.
      2) Investigate values exceeding 500 micro-ohms.
      3) Investigate values deviating from adjacent pole by more than 50 percent.
   c. Set and calibrate in accordance with Specifications and Manufacturer's recommendations.
      1) Voltage and frequency sensing relays.
      2) Time delay relays.

3) Engine start and shutdown relays.

d. Perform automatic transfer tests by:
   1) Simulating loss of normal power.
   2) Return to normal power.
   3) Simulating loss of alternate power.
   4) Simulating single-phase conditions for normal and alternate sources.

e. Monitor and verify operation and timing of:
   1) Normal and alternate voltage sensing relays.
   2) Engine-start sequence.
   3) Timing delay upon transfer and retransfer.
   4) Engine cool down and shutdown.
   5) Interlocks and limit switch functions.

H. Battery System:

1. Visual and Mechanical Inspection:
   a. Physical damage and electrolyte leakage.
   b. Evidence of corrosion.
   c. Intercell bus link integrity.
   d. Battery cable insulation damage and contaminated surfaces.
   e. Operating conditions of ventilating equipment.
   f. Visual check of electrolyte level.
2. Electrical Tests:
   a. Measure:
      1) Bank charging voltage.
      2) Individual cell voltage.
      3) Electrolyte specific gravity in each cell.
      4) Measured test values to be in accordance with manufacturer's published data.
   b. Verify during recharge mode:
      1) Charging rates from charger.
      2) Individual cell acceptance of charge.
   c. Load tests for integrity and capacity; test values in accordance with IEEE 450.

2940.70 ACCEPTANCE OF MATERIALS AND EQUIPMENT

Materials and equiopment will not be accepted until startup with full functional tests have been completed by the manufacturer representative and trtaining of Agency personnel has been completed.

3.04 2940.71MANUFACTURER'S SERVICES

A. Manufacturer's Representative: Present at Site or classroom designated by Agency, for minimum person-days listed below, travel time excluded:

1. 1 person-day for installation assistance and inspection.
2. 1 person-day for functional and performance testing and completion of Manufacturer's Certificate of Proper Installation.
3. 1/2 person-day for prestartup classroom or Site training.
4. 1 person-day for facility startup.
5. 1/2 person-day for post-startup training of Agency's personnel. Training shall not commence until an accepted detailed lesson plan for each training activity has been reviewed by Agency and Engineer.

END OF SECTION

SECTION 02950
INSTRUMENTATION AND CONTROL COMPONENTS

DESCRIPTION

1.01 SCOPE

A. This section gives general requirements for instrumentation and control components.

1.02 REFERENCES

A. The following is a list of standards which may be referenced in this section:

1. American National Standards Institute (ANSI).
2. Institute of Electrical and Electronics Engineers, Inc. (IEEE): C62.41, Recommended Practice on Surge Voltages in Low-Voltage AC Power Circuits.
3. The Instrument, Systems, and Automation Society (ISA):
   a. RP12.06.01, Recommended Practice for Wiring Methods for Hazardous (Classified) Locations Instrumentation Part 1: Intrinsic Safety.
   b. S5.1, Instrumentation Symbols and Identification.
   c. S5.4, Instrument Loop Diagrams.
   d. S50.1, Compatibility of Analog Signals for Electronic Industrial Process Instruments.
   e. TR20.00.01, Specification Forms for Process Measurement and Control Instruments, Part 1: General.
4. National Electrical Code (NEC).
5. National Electrical Manufacturers Association (NEMA):
   a. ICS 1, Industrial Control and Systems General Requirements.
6. National Fire Protection Association (NFPA): 820, Standard for Fire Protection in Wastewater Treatment and Collection Facilities.
7. Underwriters Laboratory, Inc. (UL): 508A, Standard for Safety, Industrial Control Panels.

1.03 DEFINITIONS

A. Abbreviations:

1. I&C: Instrumentation and Control.
2. I/O: Input and Output.
3. O&M: Operation and Maintenance.
4. P&ID: Process and Instrument Diagram.
5. PIC: Process Instrumentation and Control.

B. Rising/Falling: Define action of discrete devices about their setpoint.

1. Rising: Contacts close when an increasing process variable rises through setpoint.
2. Falling: Contacts close when a decreasing process variable falls through setpoint.

C. Signal Types:

1. Analog Signal, Current Type:
   a. 4 to 20 mA dc signals conforming to ISA S50.1.
   b. Unless otherwise indicated for specific PIC subsection components, use the following ISA S50.1 options.
      1) Transmitter Type: Number 2, two-wire.
      2) Transmitter Load Resistance Capacity: Class L.
      3) Fully isolated transmitters and receivers.
2. Analog Signal, Voltage Type: 1 to 5 volts dc within panel where common high precision dropping resistor is used.
3. Discrete signals, two-state logic signals using dc or 120V ac sources as indicated.
4. Pulse Frequency Signals:
   a. Direct-current pulses whose repetition rate is linearly proportional to process variable.
   b. Pulses generated by contact closures or solid state switches.
   c. Power source less than 30V dc.
5. Special Signals: Other types of signals used to transmit analog and digital information between field elements, transmitters, receivers, controllers, and digital devices.

1.04 SUBMITTALS

A. General:

1. Submit proposed Submittal breakdown consisting of sequencing and packaging of information in accordance with Project Schedule.
2. Partial Submittals not in accordance with Project Schedule will not be accepted.
3. Submittal Format:
   a. Hard Copy: Required for all submittals.
   b. Electronic Copies: Required, unless otherwise noted for specific items.
      1) Manufacturers' Standard Documents: Adobe Acrobat PDF.
      2) Documents created specifically for Project:
         a) Text and Graphics: Microsoft Word.

b) Lists: Microsoft Excel, unless otherwise noted for specific items.
c) Drawings: AutoCAD.

4. Identify proposed items, options, installed spares, and other provisions for future work (for example, reserved panel space; unused components, wiring, and terminals).
5. Legends and Abbreviation Lists:
   a. Definition of symbols and abbreviations used; for example, engineering units, flowstreams, instruments, and other process items used in nameplates, legends, and data sheets.
   b. Submit updated versions as they occur.
6. Activity Completion:
   a. Action Submittals: Completed when reviewed and approved.
   b. Informational Submittals: Completed when reviewed and found to meet conditions of the Contract.

B. Action Submittals:

1. Bill of Materials: List of required equipment.
   a. Group equipment items by enclosure and field, and within an enclosure, as follows:
      1) PIC Components: By component identification code.
   b. Data Included:
      1) Equipment tag number.
      2) Description.
      3) Manufacturer, complete model number and all options not defined by model number.
      4) Quantity supplied.
      5) Component identification code where applicable.
   c. Formats: Hard copy and Microsoft Excel.
2. Catalog Cuts:
   a. Catalog information, marked to identify proposed items and options.
   b. Descriptive literature.
   c. External power and signal connections.
   d. Scaled drawings showing exterior dimensions and locations of electrical and mechanical interfaces.
3. Instrument List:
   a. Engineer will provide an initial Instrument List in Microsoft Excel. Data from this may be used as starting point for creating final Instrument List and Component Data Sheets.

b. Applicable fields to be completed include, but are not limited to:

Instrument List Characteristics	
Item	**Initially Completed By**
Tag Number	Engineer
Loop Number	Engineer
Description	Engineer
Manufacturer and complete model number	Contractor
Size and scale range	Engineer
Setpoints	Engineer
Reference P&IDs, Electrical, Mechanical, Interconnection Drawings and Installation Details Drawings	Engineer
Instrument detail number	Engineer

c. Submit updated version of Instrument List.
d. Electronic Copies: Microsoft Excel.

4. Component Data Sheets: Data sheets for I&C components.
   a. Format:
      1) Similar to ISA TR20.00.01.
      2) Microsoft Excel, one component per data sheet.
      3) Submit proposed format for Component Data Sheets before completing data sheets for individual components.
   b. Content: Specific features and configuration data for each component, including but not limited to:
      1) Tag Number.
      2) Component type identification code and description.
      3) Location or service.
      4) Service conditions.
      5) Manufacturer and complete model number.
      6) Size and scale range.
      7) Setpoints.
      8) Materials of construction.
      9) Options included.
      10) Power requirements.
      11) Signal interfaces.

12) Name, address, and telephone number of manufacturer's local office, representative, distributor, or service facility.

c. Electronic Copies: Microsoft Excel.

5. Sizing and Selection Calculations:
   a. Primary Elements:
      1) Complete calculations plus process data used. Example for Flow Elements:
         a) Minimum and maximum values, permanent head loss, and assumptions made.
   b. Controller, Computing, and Function Generating Modules: Actual scaling factors with units and how they were computed.
   c. Electronic Copies: Microsoft Excel, one file for each group of components with identical sizing calculations.
6. Installation Details: Include modifications or further details required and define installation of I&C components.
7. Spares, expendables, and test equipment.
8. Electronic Copies: Microsoft Excel.
9. Shop Drawings for Changes Impacting PLC Programming:
   a. Submit details of changes required to PLC monitoring and control resulting from installation of alternative or upgraded process equipment and instrumentation, and other causes.
   b. Submit changes at 30-day intervals.

C. Informational Submittals:

1. Operation and Maintenance Data: In accordance with Section 01 78 23, Operation and Maintenance Data, and in addition the following:
   a. General:
      1) Provide sufficient detail to allow operation, removal, installation, adjustment, calibration, maintenance and purchasing replacements for PIC components.
      2) Submittal Format: Both hard copy and electronic copies for all submittals. Refer to Article Submittals, heading Submittal Format.
   b. Final versions of Legend and Abbreviation Lists.
   c. Provide the following items as defined under heading Action Submittals:
      1) Bill of materials.
      2) Catalog cuts.
      3) Instrument list.
      4) Component data sheets.
   d. Manufacturer's O&M manuals:
      1) Content for Each O&M Manual:
         a) Table of contents.

b) Operations procedures.
c) Installation requirements and procedures.
d) Maintenance requirements and procedures.
e) Troubleshooting procedures.
f) Calibration procedures.
g) Internal schematic and wiring diagrams.
h) Component Calibration Sheets from field quality control calibrations.

2) Provide PDF file with linked index to all manuals.

e. List of spares, expendables, test equipment and tools provided.

f. List of additional recommended spares, expendables, test equipment, and tools. Include quantities, unit prices, and total costs.

2. Provide Manufacturer's Certificate of Proper Installation where specified.

3. Agency Training Plan: In accordance with Section 01 43 33, Manufacturers' Field Services.

1.05 DELIVERY, STORAGE, AND HANDLING

A. Prior to shipment, include corrosive inhibitive vapor capsules in shipping containers, and related equipment as recommended by capsule manufacturer.

B. Prior to installation, store items in dry indoor locations. Provide heating in storage areas for items subject to corrosion under damp conditions.

C. Cover components that are exposed to dusty construction environments.

MATERIALS

2.01 2950.10GENERAL

A. Article Mechanical Systems Components covers requirements of mechanical PIC components that are not specifically referenced by Section 40 90 00, Instrumentation and Control for Process Systems, Instrument Lists or Data Sheets.

B. Article Electrical Components covers requirements for electrical PIC components that are not specifically referenced by Section 40 90 00, Instrumentation and Control for Process Systems, Instrument Lists or Data Sheets.

C. Article I&C Components covers requirements for components that are referenced by Instrument Lists or Data Sheets in Section 40 90 00, Instrumentation and Control for Process Systems.

D. First Named Manufacturer: PIC design is based on first named manufacturers of equipment.

1. If an item is proposed from other than first named manufacturer, obtain approval from Engineer for such changes in accordance with the General Conditions.
2. If proposed item requires, but not limited to, different installation, wiring, raceway, enclosures, intrinsically safe barriers, and accessories, provide such equipment and work.

E. Like Equipment Items: Use products of one manufacturer and of the same series or family of models to achieve standardization for appearance, operation, maintenance, spare parts, and manufacturer's services.

F. Service Conditions:

1. Standard Service Conditions: The following defines certain types of environments. PIC subsections refer to these definitions by name to specify the service conditions for individual equipment units. Design equipment for continuous operation in these environments:
    a. Computer Room, Air Conditioned:
        1) Temperature: 60 degrees F to 80 degrees F.
        2) Relative Humidity: 40 percent to 60 percent.
        3) NEC Classification: Nonhazardous.
    b. Inside, Air Conditioned:
        1) Temperature:
            a) Normal: 60 degrees F to 80 degrees F.
            b) With Up to 4-Hour HVAC System Interruptions: 40 degrees F to 105 degrees F.
        2) Relative Humidity:
            a) Normal: 10 percent (winter) to 70 percent (summer).
            b) With Up to 4-Hour HVAC System Interruption: 10 percent to 100 percent.
        3) NEC Classification: Nonhazardous.
    c. Inside:
        1) Temperature: 20 degrees F to 104 degrees F.
        2) Relative Humidity: 10 percent to 95 percent noncondensing
        3) NEC Classification: Nonhazardous.
    d. Inside, Corrosive:
        1) Temperature: 20 degrees F to 104 degrees F.
        2) Relative Humidity: 10 percent to 95 percent noncondensing
        3) Corrosive Environment: As noted (examples include "Hydrogen sulfide gas" or "chlorine gas").

4) NEC Classification: Nonhazardous.

e. Inside, Hazardous:
   1) Temperature: 20 degrees F to 104 degrees F.
   2) Relative Humidity: 10 percent to 95 percent noncondensing
   3) NEC Classification: As shown on Electrical Drawings.

f. Outside:
   1) Temperature: Minus 20 degrees F to 104 degrees F.
   2) Relative Humidity: 10 percent to 95 percent noncondensing, rain, snow, freezing rain.
   3) NEC Classification: Nonhazardous.

g. Outside, Corrosive:
   1) Temperature: Minus 20 degrees F to 104 degrees F.
   2) Relative Humidity: 10 percent to 95 percent noncondensing, rain, snow, freezing rain.
   3) Corrosive Environment: As noted (examples include “Hydrogen sulfide gas” or “chlorine gas”).
   4) NEC Classification: Nonhazardous.

h. Outside, Hazardous:
   1) Temperature: Minus 20 degrees F to 104 degrees F.
   2) Relative Humidity: 10 percent to 95 percent noncondensing, rain, snow, freezing rain.
   3) NEC Classification: As shown on Electrical Drawings.

G. Nameplates and Tags:

1. Component Nameplates, Panel Face: Component identification located on panel face under or near component.
   a. Location and Inscription: As shown on panel drawing.
   b. Materials: Adhesive-backed, laminated plastic.
   c. Letters: 3/16-inch-high, white on black background, unless otherwise noted.
2. Component Nameplates, Back of Panel: Component identification located on or near component inside of enclosure.
   a. Inscription: Component tag number.
   b. Materials: Adhesive-backed, laminated plastic.
   c. Letters: 3/16-inch high, white on black background, unless otherwise noted.
3. Legend Plates for Panel Mounted Pushbuttons, Lights, and Switches.
   a. Inscription:
      1) Refer to table under Paragraph Standard Pushbutton Colors and Inscriptions.
      2) Refer to table under Paragraph Standard Light Colors and Inscriptions.
      3) Refer to P&IDs on Drawings.

b. Materials: Stainless steel, keyed legend plates. Secured to panel by mounting nut for pushbutton, light, or switch.
c. Letters: Black on gray or white background.

4. Service Legends: Component identification nameplate located on face of component.
   a. Inscription: As shown on panel drawing.
   b. Materials: Adhesive-backed, laminated plastic.
   c. Letters: 3/16-inch-high, white on black background, unless otherwise noted.
5. Nametags: Component identification for field devices.
   a. Inscription: Component tag number.
   b. Materials: 16-gauge, Type 304 stainless steel.
   c. Letters: 3/16-inch-high, imposed.
   d. Mounting: Affix to component with 16-guage or 18-gauge stainless steel wire or stainless steel screws.

H. Electrical Requirements:

1. I&C and electrical components, terminals, wires, and enclosures UL recognized or UL listed.
2. Terminate and identify wires entering or leaving enclosures as follows:
   a. Analog and discrete signal, terminate at numbered terminal blocks.
   b. Special signals terminated using manufacturer's standard connectors.
   c. Identify wiring in accordance with requirements in Section 26 05 05, Conductors.
3. Analog Signal Isolators:
   a. Furnish signal isolation for analog signals that are sent from one enclosure to another.
   b. Do not wire in series instruments on different panels, cabinets, or enclosures.
4. Intrinsic Safety System Installation:
   a. Comply with NEC Article 504, Intrinsically Safe Systems.
   b. Install intrinsically safe circuits in a separate wire way that:
      1) Is separated from nonintrinsically safe circuits as specified by NEC.
      2) Is colored light blue and has message "Intrinsically Safe Circuits Only" on raceway cover every 6 inches.
5. Electrical Transient Protection:
   a. General:
      1) Function: Protect elements of PIC against damage due to electrical transients induced in interconnecting lines by lightning and nearby electrical systems.
      2) Surge suppressors are not shown for external analog transmitters. Determine quantity and location, and

show in Shop Drawings. Refer to example wiring in installation details in Drawings.

3) Provide, install, coordinate, and inspect grounding of surge suppressors at:
   a) Connection of ac power to PIC equipment including panels, consoles assembles, and field-mounted analog transmitters and receivers.
   b) At the field and panel, console, or assembly connection of signal circuits that have portions of the circuit extending outside of a protective building.

b. Surge Suppressor Types: Reference Article “Electrical Components”.

c. Installation and Grounding of Suppressors:
   1) As shown. See Surge Suppressor Installation Details.
   2) Grounding equipment, installation of grounding equipment, and terminations for field mounted devices are provided under Division 26, Electrical.

2.02 MECHANICAL SYSTEMS COMPONENTS

A. Flow Element, Rotameter, Purge:

1. For air or water service, unless otherwise noted.
2. Materials: Glass tube, fiberglass body, stainless steel float, nylon ball check valve.
3. Direct-Reading Scale Length: 2-1/2 inches, minimum.
4. Scale Ranges: 0 scfh to 2.5 scfh for air service or 0 gph to 10 gph for water service.
5. Integral inlet needle valves.
6. Integral Differential Pressure Regulators:
   a. For water service.
   b. For air service for level ranges greater than 10 feet of water.
7. Rotameters for water service.
8. Manufacturers and Products:
   a. Fischer & Porter; Series 10A3130.
   b. Brooks; Series DS-1350.

B. Manifold, Three-Valve Equalizing:

1. Type: For isolation and equalization of differential pressure transducers.
2. Materials: Stainless steel.
3. Manufacturers and Products:
   a. Anderson, Greenwood and Co.; Type M1.
   b. Evans.

C. Pressure Gauge: For other than process variable measurement.

1. Dial Size: Nominal 2-inch dial size.
2. Accuracy: 2 percent of span.
3. Scale Range: Such that normal operating pressure lies between 50 percent and 80 percent of scale range.
4. Connection: 1/4-inch NPT through bottom, unless otherwise noted.
5. Manufacturers and Products:
    a. Ashcroft Utility; Gauge Series 1000.
    b. Marsh; Standard Gauge Series.
    c. Ametek U.S.; Gauge Series P500.
    d. Acculite; Series 2000.

D. Valve, Needle:

1. Materials: Brass, stainless steel, PVC, or CPCV, as recommended by manufacturer for designated service, unless otherwise shown on Drawings.
2. Size: 0.020-inch orifice.
3. Manufacturers and Products:
    a. Whitey; Model 21RF2.
    b. Hoke; 3700 Series.

E. ON/OFF Valves:

1. Type: Ball valve.
2. Materials: Brass, stainless steel, PVC, or CPCV, as recommended by manufacturer for designated service, unless otherwise shown on Drawings.
3. Manufacturers and Products:
    a. Whitey; Series 41 through Series 43.
    b. Hoke; Flomite 7100 Series.

F. Regulating Valves:

1. Type: Needle valves, with regulating stems and screwed bonnets.
2. Materials: Brass, stainless steel, PVC, or CPCV, as recommended by manufacturer for designated service, unless otherwise shown on Drawings.
3. Manufacturers and Products:
    a. Whitey; Catalog No. RF or No. RS.
    b. Hoke; 3100 through 3300 Series.

G. Valve, Three-Way:

1. Type: Ball valve.
2. Materials: Brass or stainless steel with nylon handle as recommended by manufacturer for designated service, unless otherwise shown on Drawings.

3. Manufacturers and Products:
    a. Whitey; Series 41 through Series 43.
    b. Hoke; Selecto-Mite Series.

H. Valve, Four-Way:

1. Type: Four-way, two-position ball valve.
2. Materials:
    a. Body and Stem: Type 316 stainless steel.
    b. Handle: Black nylon.
    c. Packing Gland: Teflon.
3. Ball and stem bed, one-piece assembly.
4. Machined handle stops and directional nameplates.
5. Manufacturers and Products:
    a. Whitey; Series 457.
    b. Hoke; Multi-Mite Series.

I. Spool Valve:

1. Type: Five-port arrangement as shown, two-position, push-to-operate knob attached to the spool stem, and spring return.
2. Materials: Aluminum construction with Teflon impregnated aluminum spool, stainless steel spring, and Buna-N O-rings.
3. Port Connection: 1/4-inch outside diameter tube fittings.
4. Manufacturer and Product: Norgren; T71DAOO-TSO-TKO.

J. Solenoid Valve, Two-Way:

1. Type: Globe valve directly actuated by solenoid and not requiring minimum pressure differential for operation.
2. Materials:
    a. Body: Brassed or stainless steel globe valves as recommended by manufacturer for designated service, unless otherwise shown on Drawings.
    b. Valve Seat: Buna-N.
3. Size: Normally closed or opened, as noted.
4. Coil: 24V dc, unless noted otherwise.
5. Solenoid Enclosure: NEMA 4.
6. Manufacturer and Product: ASCO; Red Hat Series 8260.

K. Pressure Regulator, Air:

1. Provide air at reduced pressures, as shown, constant to within plus or minus 10 percent for flows from 0 scfh to 300 scfh with 100 psi supply pressure.
2. Setscrew for outlet pressure adjustment.
3. Integral filter and relief valve.
4. Manufacturers and Products:

a. Masoneilan; Series 77-4.
b. Fisher; Series 67FR.

L. Pressure Regulator, Water:

1. Materials:
   a. Body: Bronze.
   b. Spring Case: Cast iron.
   c. Seat Rings: Brass.
   d. Valve Disk and Holder: Buna-N and bronze.
   e. Diaphragm: Buna-N diaphragm.
2. Sizing: For maximum of 7 psi offset pressure.
3. Manufacturers and Products:
   a. Fisher; Controls Type 95H or 95L.
   b. Masoneilan; Series 17.

M. Test Tap:

1. Manufacturers and Products:
   a. Imperial-Eastman; quick-disconnect couplings No. 292-P and caps No. 259-P.
   b. Crawford Fitting Co.; Swagelok quick-connects Series QC4 and caps QC4-DC.
   c. Parker; CPI Series precision quick couplings.

N. Copper Tubing and Fittings:

1. Type K hard copper, ASTM B88, with commercially pure wrought copper solder joint fittings. Make joints with 95-5 wire solder, ASTM B32, Grade 95 TA. Do not use cored solder.
2. Alternatively, Type K, soft temper copper tubing, ASTM B88, with brass compression type fittings may be used where shown on Drawings.
3. Manufacturers:
   a. Parker-Hannifin.
   b. Swagelok tube fittings.

O. Plastic Tubing and Fittings:

1. Tubing:
   a. Polyethylene capable of withstanding 190 psig at 175 degrees F.
   b. Manufacturers and Products:
      1) Dekoron; Type P.
      2) Imperial Eastman; Poly-Flo black instrument tubing.
2. Fittings:
   a. Type: Brass compression.
   b. Manufacturers and Products:

1) Imperial Eastman; Poly-Flo tube fittings.
2) Dekoron; E-Z fittings.

P. Stainless Steel Tubing: ASTM A312/A312M, Type 316, 0.065-inch wall, seamless, soft annealed, as shown on Drawings.

Q. Stainless Steel Fittings:

1. Compression Type:
   a. Materials: Type 316 stainless steel, ASTM A182/A182M forged bodies or ASTM A276 barstock bodies, flareless.
   b. Manufacturers and Products:
      1) Parker Flodar; BA Series.
      2) Swagelok tube fittings.
      3) Parker CPI tube fittings; Parker A-LOK dual ferrule tube fittings.
2. Socket Weld Type:
   a. Materials: Type 316 stainless steel, ASTM A182/A182M forged bodies or ASTM A276 barstock bodies, 3,000 psi maximum working pressure, safety factor 4:1.
   b. Manufacturers:
      1) Cajon.
      2) Swagelok.
      3) Parker WELDLOK.

R. Air Set: Consists of a shutoff valve, pressure regulator, discharge pressure gauge, and interconnecting tubing.

S. Purge Set:

1. Parts: Purge rotameter flow element, pressure regulator, pressure gauge, test tap, shutoff valve, spool valve, and interconnecting tubing as shown on Drawings and as required in this section.
2. Pressure Gauge Scale Range: 150 percent of the process variable.
3. Mounting:
   a. Within consoles, panels, or a separate enclosure as shown.
   b. For separate enclosure mounted purge sets, refer to paragraphs Nonfreestanding Panel Construction and Factory Finishing for enclosure requirements.

T. Tubing Raceways:

1. Cable tray systems complete with tees, elbows, reducers, and covers.
2. Size in accordance with manufacturer’s recommendations for intended service.

3. Materials: Galvanized steel or aluminum brass as recommended by manufacturer for designated service, unless otherwise shown on Drawings.
4. Manufacturers:
   a. Globetray.
   b. Cope.

U. Air Supply Sets:

1. Parts: Integrally Mounted:
   a. Pressure Controls: Automatic START/STOP, factory set at 30 psig to 50 psig.
   b. Valves: Manual drain, manual shutoff, pressure relief, and check valve.
   c. Pressure gauge.
   d. Inlet filter muffler.
   e. Power: 120V ac.
   f. Compressor: Oilless, single cylinder, rated for at least 1 scfm at 50 psig.
   g. Manufacturers and Products:
      1) ITT Pneumotive; GH Series.
      2) Gast.
2. Simplex Air Supply Sets:
   a. Air Receiver: 2 gallons.
   b. Compressors: One.
3. Duplex Air Supply Sets:
   a. Air Receiver: 20 gallons.
   b. Compressors: Two.
   c. Automatic Failover Control: Factory set at 20 psig.

2.03 ELECTRICAL COMPONENTS

A. Surge Suppressors:

1. General:
   a. Construction: First-stage high-energy metal oxide varistor and second-stage bipolar silicon avalanche device separated by series impedance; includes grounding wire, stud, or terminal.
   b. Response: 5 nanoseconds maximum.
   c. Recovery: Automatic.
   d. Temperature Range: Minus 20 degrees C to plus 85 degrees C.
2. Suppressors on 120V ac Power Supply Connections:
   a. Occurrences: Tested and rated for a minimum of 50 occurrences of IEEE C62.41 Category B test waveform.
   b. First-Stage Clamping Voltage: 350 volts or less.
   c. Second-Stage Clamping Voltage: 210 volts or less.

d. Continuous Operation: Power supplies for one four-wire transmitter or receiver: 5 amps minimum at 130V ac. All other applications: 30 amps minimum at 130V ac.

3. Suppressors on Analog Signal Lines:
   a. Test Waveform: Linear 8 microsecond rise in current form 0 amps to a peak current value followed by an exponential decay of current reaching one-half the peak value in 20 microseconds.
   b. Surge Rating: Tested and rated for 50 occurrences of 2,000-amp peak test waveform.
      1) dc Clamping Voltage: 20 percent to 40 percent above operating voltage for circuit.
      2) dc Clamping Voltage Tolerance: Less than plus or minus 10 percent.
      3) Maximum Loop Resistance: 18 ohms per conductor.
4. Physical Characteristics:
   a. Mounted in Enclosures: Encapsulated inflame retardant epoxy.
   b. For Analog Signals Lines: EDCO PC-642 or SRA-64 series.
   c. For 120V ac Lines: EDCO HSP-121.
   d. Field Mounted at Two-Wire Instruments: Encapsulated in stainless steel pipe nipples. EDCO SS64 Series.
   e. Field Mounted at Four-Wire Instruments: With 120V ac outlet, ac circuit breaker, and 10-ohm resistors on signal lines, all in enclosure.
      1) Enclosure:
         a) NEMA 4X fiberglass or Type 316 stainless steel with door.
         b) Maximum Size: 12 inches by 12 inches by 8 inches deep.
      2) Manufacturer and Product: EDCO; SLAC series.

B. Intrinsic Safety Barriers:

1. Intrinsically Safe Relays: Monitor discrete signals that originate in hazardous area and are used in a safe area.
   a. Manufacturer and Product: MTL, Inc.; Series MTL 5000.
2. Intrinsically Safe Barriers: Interface analog signals as they pass from hazardous area to safe area.
   a. Manufacturer and Product: MTL, Inc.; Series MTL 5000.

2.04 CORROSION PROTECTION

A. Corrosion-Inhibiting Vapor Capsules:

1. Areas Where Required: Refer to Part 3, Article Protection.
2. Manufacturers and Products:
   a. Northern Instruments; Model Zerust VC.

b. Hoffmann Engineering; Model A-HCI.

2.05 I&C COMPONENTS

A. A7 pH Element and Transmitter:

1. General.
   a. Function: Measure, indicate, and transmit pH of process fluid.
   b. Parts: Element, analyzer/transmitter, interconnecting cable, and noted ancillaries.
2. Performance:
   a. Element:
      1) Range: 0 pH to 14 pH.
      2) Operating Temperature: 32 degrees F to 158 degrees F.
      3) Operating Pressure: 80 psig maximum at 149 degrees F.
   b. Analyzer/Transmitter:
      1) Range: 0 pH to 14 pH units.
      2) Accuracy: Plus or minus 0.02 pH units.
      3) Repeatability: Plus or minus 0.05 pH units.
      4) Stability: Plus or minus 0.01 pH units per month, noncumulative.
      5) Operating Temperature: Minus 4 degrees F to plus 104 degrees F.
      6) Operating Humidity: 5 percent to 95 percent; relative humidity, noncondensing.
3. Element:
   a. Process Connection: 1-inch MNPT.
   b. Body Style: Convertible with 1-inch NPT on both ends.
   c. Process Fluid: As noted.
   d. Wetted Materials: Compatible with process fluid.
   e. No field-replaceable parts, unless otherwise noted.
   f. Electrode Type: Flat glass or general purpose, unless otherwise noted.
   g. Integral Preamplifier: Required, unless otherwise noted.
   h. Mounting/Process Connections: As shown on Drawings or as noted from among the following:
      1) Submersion:
         a) Sensor handrail assembly.
         b) Handrail mounting kit.
      2) Flow-Through:
         a) 3/4-inch NPT tee.
         b) 1-inch NPT tee.
         c) 1-1/2-inch NPT tee.
      3) Insertion.

4) Hot-Tap Retractable:
a) Suitable for 64-psig line pressure.
b) 1-inch ball valve kit.
c) Titanium Tube: 21 inches (12-inch insertion).

i. Suitable for installation in Class I Div 2 hazardous locations: If noted or shown.
1) Install in accordance with manufacturer's instructions and applicable codes.

4. Analyzer/Transmitter:
a. Display: Graphic LCD, with backlighting.
b. Signal Interface:
1) Analog Outputs: Two isolated 4 mA to 20 mA dc outputs (pH and temperature).
2) Discrete Outputs:
a) Process Alarms: Two SPSTs minimum, normally open.
b) Sensor/Analyzer and Process Fault Alarm: SPDT.
c) Contact Rating: 120 volts, 5 amps, resistive.
c. Enclosure.
1) Type: NEMA 4X.
2) Suitable for panel, 2-inch pipe, or wall mounting.
d. Power: 115V ac, 50/60-Hz, unless otherwise noted.
e. Interconnecting Cable: Length as required.
f. Suitable for installation in Class I Div 2 hazardous locations: If noted or shown.

5. Expendables (for each unit provided):
a. Chemicals: 1 pint each of buffer solution for pH 4, pH 7, and pH 9.

6. Accessories:
a. Junction Box: If noted.
1) NEMA 4X box for cable extension.

7. Manufacturers and Products:
a. Rosemount Analytical; Model 399 (water), Model 396P (wastewater), or Model 396R (retractable) sensor and Model 1056 pH analyzer.
b. Hach; Digital Differential pH sensor and sc100 controller.
c. Foxboro; 871A series pH sensor and Model 875 pH Intelligent Analyzer.

B. A22 Chlorine Residual Analyzer, Amperiometric, Type 1WT:

1. General:
a. Function:
1) Measure and indicate residual chlorine (free or total, as noted) of sample.
2) Transmit proportional analog signal.

b. Type: Amperiometric.
c. Parts: Analyzer/transmitter, reagent, and accessories.

2. Performance:
   a. Species Measured: Total residual chlorine, unless otherwise noted.
   b. Process Range: As noted.
   c. Analyzer Ranges: Selectable, among 0 to 0.10, 0 to 0.20, 0 to 0.5, 0 to 1.0, 0 to 2.0, 0 to 5.0, 0 to 10.0, 0 to 20.0, and 0 to 50.0.
   d. Accuracy: 0.001 mg/L or 1 percent of full scale, whichever is greater.
   e. Sensitivity: 0.001 mg/L or 1 percent of full scale, whichever is greater.
   f. Repeatability: 0.001 mg/L or 1 percent of full scale, whichever is greater.
   g. Stability: Nominally plus or minus 1 percent of full-scale for 1 month.
   h. Continuous Operating Range: 100:1 for each measurement range.
   i. Response Time:
      1) 90 seconds with 2 rpm sample pump motor.
      2) 180 seconds with 1 rpm sample pump motor.
   j. Sample Inlet Pressure: 60 psig maximum process pressure and throttled to less than 5 psig at analyzer inlet.
   k. Sample Flow:
      1) Through the Analyzer to its Measuring Cell: 0.5 lpm (0.13 gpm).
      2) To the Analyzer: 0.1 gpm to 5 gpm with 2.5 gpm preferred (external bypass line required).
   l. Sample Temperature Range: 26 degrees F to 125 degrees F.
   m. Operating Ambient Temperature Range: 35 degrees F to 125 degrees F.
   n. Salinity: Fresh to seawater.

3. Features:
   a. Three electrode measuring cell.
   b. Platinum, gold, and copper electrodes.
   c. Bare electrodes.
   d. LCD Display:
      1) 4-digit numeric display and 16-character alphanumeric display.
      2) Five display menus.
   e. Integral Sample Pump: 2 rpm, unless otherwise noted.
   f. Mounting: Wall Mount, unless otherwise noted.
   g. Modular Cabinet Characteristics:
      1) Structural foam ABS.
      2) Nominal Dimensions: 69H by 28W by 16D, inches.

h. Wall Mounting Assembly: 15H by 22W by 11D, inches.

4. Enclosure (Electronics): NEMA 4X.
5. Signal Interface:
   a. Analog Output: 4 mA to 20 mA dc isolated output suitable for a load impedance up to 600 ohms.
   b. Discrete Outputs:
      1) Three alarm outputs.
      2) Each with SPDT contacts rated at 5 amps resistive at 230V ac and 5 amps at 30V dc resistive.
6. Process Connections:
   a. Wall Mount: 1/2-inch female NPT sample line, 3/8-inch and 1-1/4-inch drain hose connections.
   b. Modular Cabinet: 3/4-inch female NPT sample line, 1-1/4-inch female NPT drain connection.
7. Power: 115/230V ac, 50/60 Hz, single-phase, switch selectable.
8. Accessories:
   a. Flushable Y-strainer; manual throttling valve; shutoff valve; inlet flow pressure reducing valve; tubing for inlet, drain, and reagent connections; reagent bottles, and mounting hardware.
   b. Reagents: Sufficient reagent for 1 year of monitoring configuration (4 months to 6 months operation in control configuration), including:
      1) pH 4 Buffer.
      2) Potassium iodide crystals (only required for total residual chlorine applications).
      3) Detergent; only required for wastewater applications.
   c. For Mounting on Modular Cabinet:
      1) Recorder: If noted.
      2) Type: Circular or strip chart, as noted.
   d. Keyed Lockable Analyzer Enclosures: If noted.
   e. External Sample Pump: If noted.
      1) Self-priming centrifugal.
      2) Cast iron.
      3) 1/2 hp, TEFC close-coupled motor.
      4) Power Requirements: 115/230-volt, single-phase, unless otherwise noted.
      5) Sta-Rite Model DPCMS pump.
   f. Amperiometric titrator with back titrator capability for calibration of unit: If noted.
9. Manufacturer and Product: Siemens Wallace & Tiernan Micro/2000 Residual Analzyer System.

C. F4 Flow Element and Transmitter, Electromagnetic:

1. General:

a. Function: Measure, indicate, and transmit the flow of a conductive process liquid in a full pipe.
b. Type:
    1) Electromagnetic flowmeter, with operation based on Faraday's Law, utilizing the pulsed dc type coil excitation principle with high impedance electrodes.
    2) Full bore meter with magnetic field traversing entire flow-tube cross section.
    3) Unacceptable are insert magmeters or multiple single point probes inserted into a spool piece.
c. Parts: Flow element, transmitter, interconnecting cables, and mounting hardware. Other parts as noted.

2. Service:
    a. Stream Fluid:
        1) As noted.
        2) Suitable for liquids with a minimum conductivity of 5 microS/cm and for demineralized water with a minimum conductivity of 20 microS/cm.
    b. Flow Stream Descriptions: If and as described below.
3. Operating Temperature:
    a. Element:
        1) Ambient: Minus 5 to 140 degrees F, typical, unless otherwise noted.
        2) Process: Minus 5 to 140 degrees F, typical, unless otherwise noted.
    b. Transmitter:
        1) Ambient: Minus 5 to 140 degrees F, typical, unless otherwise noted.
        2) Storage: 15 to 120 degrees F, typical, unless otherwise noted.
4. Performance:
    a. Flow Range: As noted.
    b. Accuracy: Plus or minus 0.5 percent of rate for all flows resulting from pipe velocities of 2 to 30 feet per second.
    c. Turndown Ratio: Minimum of 10 to 1 when flow velocity at minimum flow is at least 1 foot per second.
5. Features:
    a. Zero stability feature to eliminate the need to stop flow to check zero alignment.
    b. No obstructions to flow.
    c. Very low pressure loss.
    d. Measures bi-directional flow.
6. Process Connection:
    a. Meter Size (diameter inches): As noted.
    b. Connection Type: 150-pound ANSI raised-face flanges; AWWA C207, Table 2 Class D; or wafer style depending on meter size, unless otherwise noted.

c. Flange Material: Carbon steel, unless otherwise noted.

7. Power (Transmitter): 120V ac, 60-Hz, unless otherwise noted.
8. Element:
   a. Meter Tube Material: Type 304 or 316 stainless steel, unless otherwise noted.
   b. Liner Material:
      1) Teflon, unless otherwise noted.
      2) For potable water service, must have appropriate approvals.
   c. Liner Protectors: Covers (or grounding rings) on each end to protect liner during shipment.
   d. Electrode Type: Flush or bullet nose as recommended by the manufacturer for the noted stream fluid.
   e. Electrode Material: Type 316 stainless steel or Hastelloy C, unless otherwise noted.
   f. Grounding Ring:
      1) Required, unless otherwise noted.
      2) Quantity: Two, unless otherwise noted.
      3) Material: Type 316 stainless steel, unless otherwise noted.
   g. Enclosure: NEMA 4X, minimum, unless otherwise noted.
   h. Submergence:
      1) Temporary: If noted.
      2) Continuous (up to 10 feet depth), NEMA 6P/IP68: If noted.
   i. Direct Buried (3 to 10 feet): If noted.
   j. Hazardous Area Certification:
      1) Class 1, Division 2, Groups A, B, C, D: If noted.
      2) Class 1, Division 1, Groups A, B, C, D, and FM approved: If noted.
      3) Class 1, Division 1, Groups C, D, and FM approved: If noted.
9. Transmitter:
   a. Mounting: Surface (wall), unless otherwise noted.
   b. Display: Required, unless otherwise noted.
      1) Digital LCD display, indicating flow rate and total.
      2) Bi-directional Flow Display: Required, unless otherwise noted.
         a) Forward and reverse flow rate.
         b) Forward, reverse and net totalization.
   c. Parameter Adjustments: By keypad or non-intrusive means.
   d. Enclosure: NEMA 4X, minimum, unless otherwise noted.
   e. Empty Pipe Detection:
      1) If noted.
      2) Drives display and outputs to zero when empty pipe detected.
10. Signal Interface (at Transmitter):

a. Analog Output:
    1) Isolated 4 mA to 20 mA dc for load impedance from 0 ohm to at least 500 ohms minimum for 24V dc supply.
    2) Supports Superimposed Digital HART protocol: If noted.
b. Discrete Outputs: If noted.
    1) Two discrete outputs, typical, rated for up to 30 volts, typical.
    2) Programmable as noted for the following typical parameters:
        a) Totalizer pulse, high/low flow rates, percent of range, empty pipe zero, fault conditions, forward/reverse, etc.
c. Discrete Input: If noted.
    1) Contact closure, configured as noted for the following typical parameters: reset totalizer, change range, hold output constant, drive output to zero, and low flow cutoff, etc.
d. Other: As noted.

11. Cables:
    a. Types: As recommended by manufacturer.
    b. Lengths: As required to accommodate device locations.
12. Built-in Diagnostic System:
    a. Features:
        1) Field programmable electronics.
        2) Self-diagnostics with troubleshooting codes.
        3) Ability to program electronics with full scale flow, engineering units, meter size, zero flow cutoff, desired signal damping, totalizer unit digit value, etc.
        4) Initial flow tube calibration and subsequent calibration checks.
13. Factory Calibration:
    a. Calibrated in an ISO 9001 and NIST certified factory.
    b. Factory flow calibration system must be certified by volume or weight certified calibration devices.
    c. Factory flow calibration system shall be able to maintain calibration flow rate for at least 5 minutes for repeatability point checks.
14. Factory Ready for Future In situ Verifications: If noted.
    a. Original meter parameter values available from vendor by request.
15. Accessories:
    a. In situ Verification System: If noted.
        1) Quantity: One complete system provided for the project.

2) Verifies quantitatively that the meter and signal converter's present condition is the same as originally manufactured.
3) Physical access to the flow-tube not required.
4) Meet standards established by the National Testing Laboratory.
5) Tests and stores over 50-meter parameters related to primary coils, electrodes, interconnecting cable and signal converter.
6) Verification standard shall be plus or minus 1 percent of wet calibration for meters produced using the calibration verification service, or plus or minus 2 percent for standard meters.
7) Windows-based software.

b. Primary Simulation System: If noted.
1) Quantity: One complete system provided for the project.
2) Verifies proper operation of the signal converter by simulating the flow meter's output signal.
a) Generates pulsed dc excitation signal with a reference voltage of 70 mV.
b) Generated signal ranges from 0 to 99 percent (0 to 32.8 feet per second) with a resolution of 0.1 percent.
c) Switch selectable for forward, reverse and zero flow rate.
3) Verifies various input and output signals.

16. Manufacturers:
a. Krohne [includes IFC 020K/IFC 090K (integral) or IFC 020F/IFC 090F (remote) signal converter].
1) Aqua Flux Flowmeter (size: 3/8 to 120 inches).
2) EnviroMag, IFS 4000 Flowmeter (size: 2 to 60 inches).
3) IFS 1000 EcoFlux Flowmeter (size: 1/10 to 8 inches).
b. Emerson Process Management, Rosemount Division:
1) Model 8705 (flanged) and Model 8711(wafer) flow tubes.
2) Model 8712 (surface) and Model 8732 (integral) transmitters.
c. McCrometer Ultra Mag.

D. F16 Flow Element, Rotameter:

1. General:
a. Function: Indicate flow rate.
b. Type: Variable area; float and tapered tube.
2. Service Conditions:
a. Process Fluid: Water, unless otherwise noted.

b. Temperature Range:
   1) Process Fluid: 33 degrees F to 250 degrees F.
   2) Ambient: 32 degrees F to 125 degrees F.
c. Maximum Operating Pressure: As noted.

3. Performance:
   a. Flowrate Range: As noted.
   b. Accuracy: Plus or minus 2 percent of maximum flow, uncalibrated, over 12.5:1 turndown.
   c. Repeatability: 0.5 percent of full scale.
4. Features:
   a. Nominal Length: 10 inches.
   b. Float Material: Type 316 stainless steel.
   c. Tube: Borosilicate glass.
   d. Seal:
      1) Type: O-ring, unless otherwise noted.
      2) Material: Buna-N, unless otherwise noted.
   e. Polycarbonate operator protection shield.
   f. Mounting: In line, unless otherwise noted.
   g. Scales: Direct-reading external metal scale, unless otherwise noted.
   h. Pressure Drop Design: Standard, unless otherwise noted.
5. Size and Process Connections:
   a. Connection Size: As noted.
   b. Tube Size: As noted.
   c. Connection Material: Type 316 stainless steel, unless otherwise noted.
   d. Connection Type: Threaded NPT, unless otherwise noted.
   e. Connection Orientation: Vertical, unless otherwise noted.
6. Signal Interface: None, unless otherwise noted.
7. Manufacturers and Products:
   a. ABB; Series 10A4500.
   b. Emerson Process Management Brooks; Series 1100.

E. L5 Level Element and Transmitter, Ultrasonic:

1. General:
   a. Function: Continuous, noncontacting level measurement.
   b. Type: Ultrasonic.
   c. Parts: Element, transmitter, interconnecting cable, and accessories as noted.
2. Service:
   a. Application: If and as noted.
   b. Vapor Space Pressure: Atmospheric, unless otherwise noted.
   c. Operating Temperature Range:
      1) Element: Minus 4 degrees F to plus 149 degrees F.
      2) Transmitter: Minus 4 degrees F to 113 degrees F.

3. Performance:
    a. Range: As noted.
    b. Zero Reference: As noted.
    c. Accuracy: Plus or minus 0.25 percent of maximum range or 6 mm, whichever is greater.
    d. Resolution: 0.1 percent of range or 2 mm, whichever is greater.
    e. Blanking Distance: Sensor dependent, typically 1 foot.
4. Element:
    a. NEMA 6P waterproof.
    b. Housing: PVDF, unless otherwise noted.
        1) Other materials subject to Engineer approval.
    c. Facing: None, unless otherwise noted.
    d. Integral Flange: If noted.
        1) Face: PTFE, unless otherwise noted.
        2) Size: As noted.
    e. Process Connection:
        1) 1-inch NPT, unless otherwise noted.
        2) Top mounted.
    f. Electrically Hazardous Rating:
        1) Class I, Div 1, Groups A, B, C, and D: If noted.
        2) Class II, Div 1, Groups E, F, and G: If noted.
        3) Other Ratings: As noted.
    g. Beam Angle: 12 degrees or less.
    h. Integral temperature compensation.
5. Transmitter:
    a. Display.
    b. Integral keypad or nonintrusive external programming.
    c. Enclosure: NEMA 4X polycarbonate, unless otherwise noted.
    d. Power Supply: 115 volts, 50/60-Hz, unless otherwise noted.
    e. Isolated Analog Output:
        1) One Minimum: 4 mA to 20 mA dc for load impedance of 0 to 750 ohms.
    f. Digital Communication: As noted.
    g. Discrete Outputs:
        1) Minimum, two relay (SPDT) rated for 2 amps continuous at 230V ac.
        2) Assignable and as noted.
6. Interconnecting Cable: Weatherproof, UV protected, length as required, and type as recommended by manufacturer.
7. Accessories:
    a. Submergence Shield: If noted.
    b. Remote Programming Software: If noted.
        1) Allows remote programming via computer and echo traces for troubleshooting.
        2) One per lot of units furnished.

c. Others: As noted.
d. If no integral keypad, furnish one handheld programmer per lot of units furnished.

8. Manufacturer and Product: Siemens; SITRANS L, Model HydroRanger 200 and Sensor, or equal.

F. L8 Level Switch, Float, Mercury:

1. General:
   a. Function: Actuate contact at preset liquid level.
   b. Type: Direct-acting float with enclosed mercury switch and integral cable.
2. Service (Liquid): Wastewater, unless otherwise noted.
3. Performance:
   a. Setpoint: As noted.
   b. Differential: 2.5 inches, maximum.
   c. Temperature: 0 degree F to 160 degrees F.
4. Features:
   a. Entire Assembly: Watertight and impact-resistant.
   b. Float Material and Size: Polypropylene body; 4.5-inch diameter and 6-inch length.
   c. Cable:
      1) Combination support and signal.
      2) Length as noted or as necessary per mounting requirements.
      3) PVC cable jacket.
   d. Mounting: Pipe, unless otherwise noted.
      1) Pipe Mounting:
         a) Cable clamp, suitable for connection to 1-inch pipe.
         b) Pipe-to-wall bracket, suitable for connection to 1-inch pipe.
      2) Suspended Mounting (internal weights): If noted.
         a) Wall mounting bracket, unless otherwise noted.
      3) Anchor Mounting Kit: If noted.
         a) Compatible with pipe-mounted floats.
         b) 15-pound vinyl-coated cast iron anchor.
         c) 1/8-inch, Type 316 stainless steel vinyl-coated wire rope.
         d) Stainless steel cable clips.
5. Signal Interface:
   a. Switch Type: Mercury tilt.
   b. Switch Contacts:
      1) Isolated, rated 4.5A continuous at 120V ac.
      2) Form C contact (one NO, one NC), unless otherwise noted.
6. Accessories: As noted.

7. Manufacturers and Products:
    a. Siemens Water Technologies; Model LS Direct Acting Float Switch (B100).
    b. Anchor Scientific; Roto-Float, Type P/Type S/Type W.

G. L10 Level Transmitter, Direct Sensing, Flange Mounted:

1. General:
    a. Function: Measure level in a process vessel.
    b. Type:
        1) Capacitive differential pressure cell.
        2) Diaphragm for process fluid isolation.
        3) Flange mounting.
        4) Smart electronics.
        5) Two-wire device.
2. Service:
    a. Process Liquid: As noted.
    b. Process Temperature Range: Minus 20 degrees F to 400 degrees F, unless otherwise noted.
    c. Ambient Temperature Range: Minus 40 degrees F to 250 degrees F, unless otherwise noted.
    d. Humidity: 0 percent to 100 percent relative.
3. Performance:
    a. Range: As noted.
    b. Accuracy: Plus or minus 0.75 percent of span.
4. Features:
    a. Zero Suppression or Elevation: As noted.
    b. Damping: User-selectable; 0 second to 36 seconds time constant of analog output response to step change input.
    c. Transmitter: Two-wire, powered from external power supply.
    d. Zero and Span Adjustments: Local, external, noninteractive, unless otherwise noted.
    e. Process Wetted Parts: Flanged Process Connection (Transmitter High Pressure Side):
        1) Flange Size/Type: 3-inch, Class 150, unless otherwise noted.
        2) Process Diaphragm: Type 316 stainless steel, unless otherwise noted.
        3) Mounting Flange: Stainless steel, unless otherwise noted.
        4) Mounting: Flush, unless otherwise noted.
        5) Extension Materials (if extension mount noted): Type 316 stainless steel, unless otherwise noted.
        6) Extension Length (if extension mount noted): As noted.
        7) Process Fill Fluid (High Pressure Side): Dow Corning Silicone 200, unless otherwise noted.

f. Reference Process Connection (Transmitter Low Pressure Side) Configuration (Differential, unless otherwise noted):
   1) Drain/Vent: Type 316 stainless steel.
   2) Flange Adapter: Stainless steel.
   3) Diaphragm Material: Type 316 stainless steel, unless otherwise noted.
   4) Sensor Fill Fluid (Low Pressure Side): Silicone, unless otherwise noted.
g. O-Ring: Glass-filled TFE.
h. Flange and Adapter Bolts: Type 316 stainless steel, unless otherwise noted.
i. LCD Meter: If noted.
j. Integral Transient Protection: If noted.

5. Signal Output Interface:
   a. 4 mA to 20 mA dc for load impedance 0 ohm to 580 ohms minimum at 24V dc supply voltage without load adjustment.
   b. Superimposed digital signal based on HART protocol.
6. Enclosure: NEMA 4X, polyurethane-covered aluminum, unless otherwise noted.
7. Manufacturers/Model: Emerson Process Rosemount; 3051L, Liquid Level Transmitter.

H. L41 Level Element/Transmitter, Submersible, Water:

1. General:
   a. Function: Measure and transmit signal proportional to level.
   b. Type: Totally submersible pressure sensor (loop powered).
   c. Parts: Sensor, interconnecting cable, other parts as noted.
2. Service:
   a. Fluid: Potable water, unless otherwise noted.
3. Performance:
   a. Process Range:
      1) As noted.
      2) Provide fixed factory range such that noted process range is between 40 percent and 80 percent of fixed factory range.
   b. Accuracy: 0.10 percent of full scale, unless otherwise noted.
   c. Temperature, Operating: Minus 4 degrees F to plus 140 degrees F.
   d. Overpressure:
      1) Proof: At least 1.5 times full scale.
      2) Burst: At least 2.0 times full scale.
   e. Long Term Stability: Plus or minus 0.10 percent full scale/year, typical.
4. Features:
   a. Sensor:
      1) Silicon pressure-sensing element.

2) Titanium or Type 316 stainless steel pressure module assembly, unless otherwise noted.
   a) For titanium sensor only; 5-year corrosion warranty, replace sensor if it fails due to corrosion: If noted.
3) NEMA 6/IP 68 rating (submersible).
4) Temperature compensation.
5) Dimensions, Nominal:
   a) Diameter: 1 inch maximum.
   b) Length: 10 inches maximum.
6) Loop powered, 9 to 30V dc.

b. Interconnecting Cable:
1) Length: As required.
2) Polyurethane sheathed, unless otherwise noted.
3) Kevlar strain relief cord.
4) Integral vent tube.

c. Sensor Termination Enclosure: Required, unless otherwise noted.
1) Enclosure: NEMA 4X.
2) Houses such noted items as desiccant vent, filter, microfilter, aneroid bellows.
3) 2-Inch Pipe Mounting Kit: If noted.

d. Accessories:
1) Aneroid Bellows: If noted.
   a) Bellows shall be suitable for application.
2) Desiccant Module: Required, unless otherwise noted.
3) Spare Desiccant Modules: If noted.
   a) Quantity: As noted.
4) Cable Hanger, Kellems Type Grip: Required, unless otherwise noted.
5) Lightning Protection:
   a) Internal (protects against water lightning strike): Required, unless otherwise noted.
   b) External (protects 4 to 20 mA dc output): Required, unless otherwise noted.

5. Signal Interface: 4 to 20 mA dc output, for load impedance of 0 ohm to 750 ohms, minimum for 24V dc supply without load adjustment.
6. Certification(s): Class 1, Div 1, Groups C and D: If noted.
7. Manufacturers (provided they can furnish the noted options):
   a. Esterline; KPSI Series 730.
   b. GE Sensing; Druck 1830/1835.
   c. Viatran; Model 611.
   d. PMC/STS (Process Measurement & Controls and Sensor Technik Sirnach AG).

I. L118 Level Switch, Float, Nonmercury, Type 1A:

1. General:
    a. Function: Actuate contact at preset liquid level.
    b. Type:
        1) Direct-acting float with enclosed switch and integral cable.
        2) Mercury-free.
2. Service (Liquid): Wastewater, unless otherwise noted.
3. Performance:
    a. Setpoint: As noted.
    b. Differential: 3.5 inches for suspended internal weight configuration.
    c. Temperature: 140 degrees F, maximum.
4. Features:
    a. Entire Assembly: Watertight and impact-resistant.
    b. Float Material and Size: Polypropylene body; 3-inch diameter and 4-1/2-inch length.
    c. Cable:
        1) Combination support and signal.
        2) Length as noted or as necessary per mounting requirements.
        3) Plastic-jacketed cable.
    d. Mounting: Pipe, unless otherwise noted.
        1) Pipe Mounting: Cable clamp, suitable for connection to 1-inch pipe.
        2) Suspended Mounting (internal weight): If noted.
        3) Suspended Mounting (external weight): If noted.
            a) External Weight Material: Lead with stainless steel fasteners.
5. Signal Interface:
    a. Switch Type: Snap-action actuated by rolling steel ball within float.
    b. Switch Contacts:
        1) Isolated, rated 7A continuous at 120V ac.
        2) Form C contact (one NO, one NC), unless otherwise noted.
6. Accessories: As Noted.
7. Manufacturer and Product: Anchor Scientific; Eco-Float, Model G.

J. P4 Pressure Gauge:

1. General:
    a. Function: Local pressure indication.
    b. Type: Bourdon tube element.
2. Performance:
    a. Scale Range: As noted.
    b. Accuracy: Plus or minus 0.50 percent of full scale.
3. Features:

a. Dial: 4-1/2-inch diameter.
b. Pointer Vibration Reduction: Required, unless otherwise noted. Use the following method.
    1) Liquid filled gauge front, unless otherwise noted.
        a) Glycerine fill, unless otherwise noted.
c. Case Material: Black thermoplastic, unless otherwise noted.
d. Materials of Wetted Parts (including element, socket/process connection, throttling device (if specified) and secondary components):
    1) Stainless steel, unless otherwise noted.
e. Pointer: Adjustable by removing ring and window.
f. Window: Glass or acrylic, unless otherwise noted.
g. Threaded reinforced polypropylene front ring.
h. Case Type: Solid front with blow-out back.

4. Process Connection:
    a. Mounting: Lower stem, unless otherwise noted.
    b. Size: 1/2-inch MNPT, unless otherwise noted.
5. Accessories:
    a. Throttling Device: Required, unless otherwise noted.
        1) Type suitable for the intended service.
        2) Install in gauge socket bore.
6. Manufacturers and Products:
    a. Ashcroft; Duragauge Model 1259/Model, 1279/Model, 1279 PLUS!
    b. Ametek U.S. Gauge; Solfrunt Model 19XX/1981Advantatge.
    c. WIKA, Type 2XX.34.

K. P6 Pressure Seal, Diaphragm:

1. General:
    a. Function: Isolate sensing element from process fluid.
    b. Type:
        1) Diaphragm.
        2) Fluid filled between diaphragm and sensing element.
2. Service:
    a. Pressure: Same as associated sensor.
    b. Temperature Range: If noted.
3. Performance:
    a. Pressure:
        1) For threaded process connections, at least 2,500 psig at 100 degrees F.
        2) Glycerin Fill: Suitable only for pressure (not vacuum applications).
    b. Temperature:
        1) Dependent upon fill fluid.
            a) Glycerin (food grade): Zero to 400 degrees F.

b) Silicone: Minus 40 degrees F to plus 600 degrees F.
c) Silicone (food grade): Zero to 375 degrees F.
d) Halocarbon: Minus 70 degrees F to 300 degrees F.

4. Features:
   a. Materials:
      1) Lower Housing: Type 316 stainless steel, unless otherwise noted.
      2) Diaphragm Material: Type 316 stainless steel, unless otherwise noted.
      3) Top Housing: Steel, unless otherwise noted.
   b. Diaphragm: Welded to upper housing, unless otherwise noted.
   c. Filling screw in upper housing.
   d. Fill Fluid:
      1) As noted.
      2) Or approved equal.
      3) Factory assembled and filled.
   e. Flushing Connection: 1/4-inch NPT in lower housing.
   f. Diaphragm Seal Displacement: 0.1 cubic inch, nominal.
5. Connections:
   a. Instrument: 1/2-inch female NPT, unless otherwise noted or shown.
   b. Process: 1/2-inch female NPT, unless otherwise noted or shown.
6. Manufacturers:
   a. Ashcroft; Type 201.
   b. Ametek; Mansfield and Green Division; Type SG.
   c. WIKA; Type L990.10.

L. P8 Pressure Switch, Fixed Deadband:

1. General:
   a. Function: Monitor pressure.
   b. Type: Diaphragm actuated switch.
2. Performance:
   a. Setpoint:
      1) As noted.
      2) Repeatability: Plus or minus 1 percent.
   b. Range: Noted setpoint shall fall between 20 percent and 80 percent of range.
   c. Overpressure Proof Pressure: At least 400 percent of rated maximum static pressure.
   d. Operating Temperature Range:
      1) Dependent on actuator seal materials.
      2) For Buna-N seal, 0 degrees F to 150 degrees F.

3. Features:
    a. Actuator Seal: Buna-N, unless otherwise noted.
    b. Differential (deadband): Fixed.
    c. Reset: Automatic, unless otherwise noted.
    d. Mounting: Surface, unless otherwise noted.
4. Process Connection:
    a. 1/4-inch NPT female connections, unless otherwise noted.
    b. Materials: Nickel-plated brass, unless otherwise noted.
5. Enclosure: NEMA 4X.
6. Signal Interface:
    a. Contact Type:
        1) SPDT, unless otherwise noted.
        2) Rated for 10 amps minimum at 120V ac.
    b. Hermetically Sealed Switch: If noted.
7. Manufacturers and Products:
    a. Ashcroft; Type 400, B Series.
    b. United Electric; 400 Series.

M. P9 Pressure Transmitter:

1. General:
    a. Function: Measure pressure and transmit signal proportional to pressure.
    b. Type:
        1) Electronic variable capacitance or silicon strain gauge.
        2) Two-wire transmitter; “smart electronics”.
    c. Parts: Transmitter and accessories.
2. Performance:
    a. Range: As noted.
        1) Select transmitter’s factory upper range limit (URL) such that upper boundary of noted range is as close as possible to 80 percent of factory URL, but does not exceed it.
    b. Accuracy: Plus or minus 0.075 percent of span, unless otherwise noted.
    c. Ambient Operating Temperature: Minus 40 degrees F to plus 175 degrees F, with integral meter.
    d. Process Operating Temperature: Minus 40 degrees F to plus 250 degrees F.
    e. Humidity: 0 to 100 percent relative humidity.
    f. Hazardous Location Certifications: If and as noted.
3. Features:
    a. Type: Gauge pressure, unless otherwise noted.
    b. Adjustable damping.
    c. LCD indicator, unless otherwise noted.
        1) Display in either percent or engineering units, field configurable.

d. Wetted Metallic Parts: Type 316 stainless steel, unless otherwise noted.
   1) Includes drain/vent valves; process flanges and adapters, and process isolating diaphragm.
e. Wetted O-Rings: Glass filled TFE, graphite filled PTFE, or Viton, unless otherwise noted.
f. Bolts and Nuts (if required): Type 316 stainless steel, unless otherwise noted.
g. Fill Fluid: Silicone, unless otherwise noted.

4. Process Connections:
   a. Line Size: 1/2 inch.
   b. Connection Type: FNPT.
   c. Direct/remote Diaphragm Seal: If and as noted.
5. Signal Interface:
   a. 4-20 mA dc output with digital signal based on HART protocol, unless otherwise noted below.
      1) Nominal Maximum Loop Resistance with External 24V dc Power Supply: 550 ohms.
   b. FOUNDATION fieldbus protocol: If noted.
   c. Profibus: If noted.
6. Enclosure:
   a. Type: NEMA 4X.
   b. Materials: Coated aluminum, unless otherwise noted.
   c. Mounting bracket, unless otherwise noted.
      1) Bracket and Accessories: Stainless steel; suitable for mounting transmitter to panel or 2-inch pipe.
7. Accessories:
   a. Two-valve (isolate and vent) Stainless Steel Manifold: If noted.
8. Manufacturers and Products:
   a. Gauge Pressure Units:
      1) Rosemount; Model 3051 TG.
      2) Foxboro; Model IGP20.
      3) SMAR; LD30XM Series.
   b. Absolute Pressure Units:
      1) Rosemount; Model 3051 TA.
      2) Foxboro; Model IAP20.
      3) SMAR; LD30XA Series.
   c. Wika.

N. P15 Pressure Seal, Annular:

1. General:
   a. Function:
      1) Sense pressure in a process line and transfer to pressure monitoring device.

2) Protect attached pressure monitoring device from sludge or slurry.

b. Type: Annular fluid-filled device that senses pressure through flexible sleeve around full pipe circumference.

2. Performance:
   a. Operating Conditions: Suitable for line pressures up to pipe flange rating.
3. Features:
   a. Construction:
      1) In-Line, 8 Inches and Smaller: Full-faced thru-bolted with outside diameter same as mating flanges, unless otherwise noted.
      2) In-Line, 10 Inches and Larger: Wafer style.
      3) Offline: Threaded, unless otherwise noted.
   b. Materials:
      1) Body: Carbon steel, unless otherwise noted.
      2) Flanges (Where Applicable): Carbon steel, unless otherwise noted.
      3) Flexible Sleeve: Buna-N, unless otherwise noted.
      4) Fill Fluid: Ethylene glycol/water or propylene glycol, unless otherwise noted.
   c. Factory Filled System:
      1) Filled and assembled with pressure monitoring device(s).
      2) Coordinate attached pressure monitoring device(s) with system integrator. Seal vendor's standard pressure monitoring device(s) only acceptable if it meets specification of the related pressure monitoring device.
4. Process Connections:
   a. Mounting: In-line or offline, as noted or shown.
   b. Pipe Size:
      1) In-Line: As noted or shown.
      2) Offline: 2 inches, unless otherwise noted.
   c. Connections:
      1) In-Line, Full-Faced Through-Bolted: ASME B16.5, 150-pound flanges.
      2) In-Line, Wafer Style: Compatible with Classes 150/300 flange drilling.
      3) Offline: Female NPT Threaded, unless otherwise noted.
5. Manufacturers and Products:
   a. Onyx.
   b. Red Valve Company; Series 40, Series 42/742, Series 48.

c.

CONSTRUCTION

3.01 PROTECTION

A. Use corrosion-inhibiting vapor capsules in enclosures to protect electrical, instrumentation, and control devices, including spare parts, from corrosion.

B. Periodically replace capsules based on capsule manufacturer's recommendations.

3.02 SUPPLEMENT

A. The supplement listed below, following "End of Section," is part of this Specification.

1. Example Instrument List.

END OF SECTION

EXAMPLE INSTRUMENT LIST

Tag Number	Comp Code	Component Title	Options	P&ID	Inst. Detail	Mech/Elec	Panel Number
QL-2-51(12)[00]	M49	Selector Switch & Indicator Light Combination	None	17-I-10			FP-4-50
FIT-3-51(2) FE-3-51(2)	F20	Flow Element & Transmitter, Flume or Weir, Ultrasonic	Range: 0 to 60 mgd; Weir Size: 4 feet	17-I-10	717	6-S-4 16-E-24	
LI-3-52(2)	S10	Indicator, Switchboard	Range: 0 to 16.5 feet edgewise	17-I-10			FP-4-90
LSL-3-53(2)	L99	Level Switch, Encapsulated	Setpoint: Elev 425.5	17-I-10		16-E-24	
FIC-3-54(2)	S4	Controller, CAM, Electronic	Range: 0 to 60 mgd	17-I-10			FP-4-90
FIT-3-54(2) FE-3-54(2)	F4	Flow Element & Transmitter, Electromagnetic	Range: 0 to 60 mgd; Pipe Size: 48 inches; Scale: 0 to 60 mgd	17-I-10	701	16-E-34	
LSHH-3-58(2)	L8	Level Switch, Float Type with Integral Switch	Setpoint: Elev 403.0	17-I-10	702	16-E-34	

SECTION 04010
MANUFACTURERS' FIELD SERVICES

DESCRIPTION

1.01 SCOPE

A. This section includes requirements for manufacturers field services associated with supplied equipment

1.02 DEFINITIONS

A. Person-Day: One person for 8 hours within regular Contractor working hours.

1.03 SUBMITTALS

A. Informational Submittals:

1. Training Schedule: Submit, in accordance with requirements of this specification, not less than 21 days prior to start of equipment installation and revise as necessary for acceptance.
2. Lesson Plan: Submit, in accordance with requirements of this specification, proposed lesson plan not less than 21 days prior to scheduled training and revise as necessary for acceptance.

1.04 QUALIFICATION OF MANUFACTURER'S REPRESENTATIVE

A. Authorized representative of the manufacturer, factory trained, and experienced in the technical applications, installation, operation, and maintenance of respective equipment, subsystem, or system, with full authority by the equipment manufacturer to issue the certifications required of the manufacturer. Additional qualifications may be specified elsewhere.

B. Representative subject to acceptance by Agency. No substitute representatives will be allowed unless prior written approval by such has been given.

MATERIALS

2.01 **NOT USED**

CONSTRUCTION

3.01 4010.30FULFILLMENT OF SPECIFIED MINIMUM SERVICES

A. Furnish manufacturers' services when required by an individual specification section, to meet the requirements of this section.

B. Where time is necessary in excess of that stated in the Specifications for manufacturers' services, or when a minimum time is not specified, the time required to perform the specified services shall be considered incidental.

C. Schedule manufacturer' services to avoid conflict with other onsite testing or other manufacturers' onsite services.

D. Determine, before scheduling services, that all conditions necessary to allow successful testing have been met.

E. Only those days of service approved by Agency will be credited to fulfill the specified minimum services.

F. When specified in individual specification sections, manufacturer's onsite services shall include:

1. Assistance during product (system, subsystem, or component) installation to include observation, guidance, instruction of Contractor's assembly, erection, installation or application procedures.
2. Inspection, checking, and adjustment as required for product (system, subsystem, or component) to function as warranted by manufacturer and necessary to furnish Manufacturer's Certificate of Proper Installation.
3. Providing, on a daily basis, copies of all manufacturers' representatives field notes and data to Agency.
4. Revisiting the Site as required to correct problems and until installation and operation are acceptable to Agency.
5. Resolution of assembly or installation problems attributable to, or associated with, respective manufacturer's products and systems.
6. Assistance during functional and performance testing, and facility startup and evaluation.
7. Training of Agency's personnel in the operation and maintenance of respective product as required.
8. Additional requirements may be specified elsewhere.

3.02 MANUFACTURER'S CERTIFICATE OF COMPLIANCE

A. When so specified, a Manufacturer's Certificate of Compliance, a copy of which is attached to this section, shall be completed in full, signed by the entity supplying the product, material, or service, and submitted prior to shipment of product or material or the execution of the services.

B. Agency may permit use of certain materials or assemblies prior to sampling and testing if accompanied by accepted certification of compliance.

C. Such form shall certify that the proposed product, material, or service complies with that specified. Attach supporting reference data, affidavits, and certifications as appropriate.

D. May reflect recent or previous test results on material or product, if acceptable to Agency.

3.03 MANUFACTURER'S CERTIFICATE OF PROPER INSTALLATION

A. When so specified, a Manufacturer's Certificate of Proper Installation form, a copy of which is attached to this section, shall be completed and signed by the equipment manufacturer's representative.

B. Such form shall certify that the signing party is a duly authorized representative of the manufacturer, is empowered by the manufacturer to inspect, approve, and operate their equipment and is authorized to make recommendations required to assure that the equipment is complete and operational.

3.04 TRAINING

A. General:

1. Furnish manufacturers' representatives for detailed classroom and hands-on training to Agency's personnel on operation and maintenance of specified product (system, subsystem, component) and as may be required in applicable Specifications.
2. Furnish trained, articulate personnel to coordinate and expedite training, to be present during training coordination meetings with Agency.
3. Manufacturer's representative shall be familiar with facility operation and maintenance requirements as well as with specified equipment.
4. Furnish complete training materials, to include operation and maintenance data, and manufacturer's O&M manuals, to be retained by each trainee.

B. Training Schedule:

1. List specified equipment and systems that require training services and show:
   a. Respective manufacturer.
   b. Estimated dates for installation completion.
   c. Estimated training dates.
2. Allow for multiple sessions when several shifts are involved.
3. Adjust schedule to ensure training of appropriate personnel as deemed necessary by Agency, and to allow full participation by manufacturers' representatives. Adjust schedule for interruptions in operability of equipment.

C. Lesson Plan: When manufacturer or vendor training of Agency personnel is specified, prepare a lesson plan for each required course containing the following minimum information:

1. Title and objectives.
2. Recommended attendees (e.g., managers, engineers, operators, maintenance).
3. Course description, outline of course content, and estimated class duration.
4. Format (e.g., lecture, self-study, demonstration, hands-on).
5. Instruction materials and equipment requirements.
6. Resumes of instructors providing the training.

D. Pre-startup Training:

1. Coordinate training sessions with Agency's operating personnel and manufacturers' representatives, and with submission of operation and maintenance manuals.
2. Complete at least 14 days prior to beginning of facility startup.

E. Post-startup Training: If required in Specifications, furnish and coordinate training of Agency's operating personnel by respective manufacturer's representatives.

3.05 SUPPLEMENTS

A. The supplements listed below, following "End of Section", are part of this Specification.

1. Manufacturer's Certificate of Compliance.
2. Manufacturer's Certificate of Proper Installation.

END OF SECTION

MANUFACTURER'S CERTIFICATE OF COMPLIANCE

AGENCY:

PRODUCT, MATERIAL, OR SERVICE SUBMITTED:

PROJECT NAME:

PROJECT NO:

Comments:_____

_____

_____

_____

_____

_____

I hereby certify that the above-referenced product, material, or service called for by the contract for the named project will be furnished in accordance with all applicable requirements. I further certify that the product, material, or service are of the quality specified and conform in all respects with the contract requirements, and are in the quantity shown.

Date of Execution: _____, 20___

Manufacturer:_____

Manufacturer's Authorized Representative *(print)*: _____

_____

(Authorized Signature)

MANUFACTURER'S CERTIFICATE OF PROPER INSTALLATION

AGENCY _____ EQPT SERIAL NO:_____

EQPT TAG NO:_____ EQPT/SYSTEM:_____

PROJECT NO:_____ SPEC. SECTION:_____

I hereby certify that the above-referenced equipment/system has been:

(Check Applicable)

- ☐ Installed in accordance with Manufacturer's recommendations.
- ☐ Inspected, checked, and adjusted.
- ☐ Serviced with proper initial lubricants.
- ☐ Electrical and mechanical connections meet quality and safety standards.
- ☐ All applicable safety equipment has been properly installed.
- ☐ Functional tests.
- ☐ System has been performance tested, and meets or exceeds specified performance requirements. (When complete system of one manufacturer)

Note: Attach any performance test documentation from manufacturer.

Comments:_____

_____

_____

_____

I, the undersigned Manufacturer's Representative, hereby certify that I am (i) a duly authorized representative of the manufacturer, (ii) empowered by the manufacturer to inspect, approve, and operate his equipment and (iii) authorized to make recommendations required to assure that the equipment furnished by the manufacturer is complete and operational, except as may be otherwise indicated herein. I further certify that all information contained herein is true and accurate.

Date: _____,
20___

Manufacturer:_____

By Manufacturer's Authorized Representative: _____
(Authorized Signature)

SECTION 04020
AGENCY-FURNISHED PRODUCTS

DESCRIPTION

1.01 SCOPE

A. this section provides requirements for agency furnished products

1.02 DEFINITIONS

A. Seller: The party under separate contract with Agency to furnish the products or special services specified herein.

1.03 AGENCY-FURNISHED PRODUCTS

A. (Item Description):

1. Quantity: **[B: .]**
2. **[C: Point of receipt: .]**
3. Estimated date of arrival: Between **[E:]**.
4. Equipment or facility necessary for receipt and unloading of product: **[F: .]**
5. Estimated weight of product: **[G: .]**
6. Special handling or storage instructions: **[H: .]**

B. Parts of the Process Instrumentation and Control System (PICS) applications software programming will be performed by Engineer.

1.04 INFORMATION FURNISHED BY AGENCY

A. Shop drawings related to Agency-furnished products will be made available for Contractor's use in performing the work under this section.

B. Manufacturer's installation, operation, and maintenance instructions for Agency-furnished products will be made available.

1.05 SUBMITTALS

A. Action Submittals:

1. Shop Drawings:
   a. Show layout, location, and identification of materials provided by Contractor for installation of Agency-furnished products.

b. Include pipe, fittings, valves, specialties, hangers, supports, equipment, and required specialties.
c. Accurately show openings in floors, walls, and other parts of structure.
d. Provide electrical and instrumentation diagrams to indicate connecting and interconnecting electrical and control work.
e. Submit complete list of materials to be furnished, and include data necessary to allow Agency to determine their fitness for the work.
f. Samples: **[G:]**

1.06 TRANSFER OF PRODUCTS

A. Unless indicated otherwise, items will be furnished f.o.b. the Project Site.

B. Upon delivery, conduct with Agency a joint inspection for the purpose of identifying product, general verification of quantities, and observation of apparent condition. Such inspection will not be construed as final or as receipt of any product that, as a result of subsequent inspections and tests, are determined to be nonconforming.

C. Damaged or incomplete products to be returned for replacement will not be unloaded, except as necessary to expedite return shipment. Agency will submit claims for transportation damage and expedite replacement of damaged, defective, or deficient items.

D. Indicate signed acceptance of delivery on a copy of the invoice.

E. If Contractor is not prepared to accept delivery of Agency-furnished products by either the specified Estimated Date of Arrival or such Agency-confirmed delivery date, as specified herein, associated costs incurred by Agency shall be borne by Contractor. Such costs may include, but not be limited to, demurrage, interest, insurance costs, additional administrative and engineering costs, additional factory and field technical support, additional storage and reshipping costs, cost escalation, and extended warranty costs due.

1.07 UNLOADING, STORAGE AND MAINTENANCE

A. Subsequent to transfer, Contractor shall have complete responsibility for unloading Agency-furnished products. Unload product in accordance with manufacturers' instructions, or as specified.

B. Store, protect, and maintain product to prevent damage until final acceptance of completed work. Damage to or loss of products after date of transfer to Contractor shall be repaired to original condition, or replaced with new identical products, at the discretion of Engineer.

C. Maintain complete inventory of all Agency-furnished products after their transfer to Contractor.

1.08 SCHEDULING AND SEQUENCING

A. Include sequencing constraints specified herein as part of Progress Schedule.

B. Agency will keep Contractor informed of probable delivery date changes.

C. Agency will confirm delivery date with Contractor 10 days prior to scheduled delivery, and within 24 hours of expected delivery time.

D. Where a preinstallation meeting is required by this Section, provide a minimum of 10 days' advance written notice to Agency of the proposed date for starting installation.

E. Provide a minimum of 10 days notice to Agency that Agency-furnished product is ready for all special services listed herein to be furnished by Agency through its contract with seller. Contractor shall bear the cost of all damages assessed to Agency by seller resulting from delays caused by Contractor.

1.09 EXTRA MATERIALS

A. Unless otherwise specified, Agency will take acceptance of, and be responsible for storing associated extra materials and special tools upon delivery.

1.10 PREINSTALLATION MEETING

A. Arrange and attend a preinstallation meeting with the Agency to review general procedures, erection and installation instructions, and installation sequence.

B. Additional meetings prior to installation may be required, as determined by Agency, to transmit Agency's installation instructions to Contractor.

MATERIALS

2.01 **NOT USED**

CONSTRUCTION

3.01 4020.30 INSTALLATION

A. Install products in conformance with Agency-furnished product shop drawings and installation instructions.

B. Provide all interconnecting structures, equipment, piping, electrical and instrumentation work, finish painting, and appurtenances to achieve a complete and functional system.

C. Provide foundation pads for Agency-furnished products as shown. Verify exact dimensions and configuration of all pads, including penetrations, with Agency-furnished product shop drawings.

D. Anchor Bolts:

1. Where required, provide anchor bolts, fasteners, washers, and templates needed for installation of Agency-furnished equipment.
2. Size and locate anchor bolts in accordance with Agency-furnished product shop drawings and installation instructions.

E. Mechanical and electrical equipment shall be properly aligned, plumb and level, with no stresses on connecting piping or conduit.

F. Verify direction of motor rotation before starting equipment drives.

G. Verify operability and safety of electrical system needed to operate equipment. Check electrical system for continuity, phasing, grounding, and proper functions.

H. Pump Installation:

1. Level base by means of steel wedges (steelplates and steel shims). Wedge taper not greater than 1/4 inch per foot. Use double wedges to provide level bearing surface for the pump and driver base. Accomplish wedging so there is no change of level or springing of baseplate when anchor bolts are tightened.
2. Adjust pump assemblies so driving units are properly aligned, plumb, and level with driven units and all interconnecting shafts and couplings. Do not compensate for misalignment by use of flexible couplings.

3. After pump and driver have been set in position, aligned, and shimmed to proper elevation, grout space between bottom of baseplate and concrete foundation with a poured, nonshrinking grout of the proper category. Remove wedges after grout is set and pack void with grout.
4. Connect suction and discharge piping without imposing strain to pump flanges. Pump discharge and suction flexible couplings or bellows shall not be considered to compensate for misalignment.
5. Pipe pump drain(s) to hub drain or scupper.

3.02 FIELD FINISHING

A. Products will be delivered with prime and finish coat(s) applied.

1. Finish coat as specified in Section 09 90 00, Painting and Coating.
2. Touch up or repair damage to coatings resulting from unloading, storage, installation, testing, and startup.
3. If finish coats are damaged extensively after transfer, completely repaint.
4. Touch up, repair, or complete repainting shall match color of original paint, and shall be fully compatible with applied primers and finish.

3.03 PRODUCT PROTECTION

A. Immediately after installation, lubricate components in accordance with manufacturer's instructions.

B. Follow manufacturer's instructions for protection and maintenance during storage, after installation but prior to testing and startup, and after startup but prior to acceptance.

C. Furnish incidental supplies including lubricants, cleaning fluids, and similar products as needed for protecting and maintaining the Agency-furnished products.

3.04 TESTS AND INSPECTION

A. Perform tests and inspections of installed products in accordance with requirements shown herein, Section 01 91 14, Equipment Testing and Facility Startup, and manufacturer's instructions.

1. Functional Test: **[A: .]**
2. Performance Test: **[A: .]**

3.05 SUPPLEMENT

A. The supplement listed below, following “End of Section,” is a part of this Specification:

1. Agency Furnished Material, Product, or Equipment Transfer.

END OF SECTION

AGENCY FURNISHED MATERIAL, PRODUCT, OR EQUIPMENT TRANSFER

DATE: _____

ATTACHMENT TO DAILY LOG NO: _____ SHEET 7 OF 7

DAY: _____

PROJECT: _____ CITY PROJ _____

DEVELOPER (IF APPLICABLE): _____

CONTRACTOR: _____

INSPECTOR: _____

THE FOLLOWING MATERIAL, PRODUCT, OR EQUIPMETN IS HEREBY TRANSFERRED FROM AGENCY TO CONTRACTOR WITH THE FOLLOWING PROVISIONS:

1. Transfer of this equipment does not relieve the Contractor of any responsibility under the Contract.
2. If, at any time, other work is necessary on the subject equipment, the Contractor will arrange with the Agency for a suitable time to perform the work.
3. The guarantee warranty period as defined in the Specifications for this Contract shall commence upon this _____ day of _____, 20 _____ for the equipment itemized below.

EQUIPMENT:

(PROVIDE DOCUMENTATION FROM EQUIPMENT MANUFACTURER REGARDING GUARANTEE WARRANTY, AS APPROPRIATE)

DESCRIPTION: *(Include Manufacturer, Serial No., Model No.'s, Location, Appurtenances)*

COMMENTS OR EXCEPTIONS: *(Note Any Required Action and Responsibility)*

City's Consultant (if any) (name & company name)	Date
Contractor's Representative	Date
Agency's Representative	Date

SECTION 04020
AGENCY-FURNISHED PRODUCTS

DESCRIPTION

1.01 SCOPE

A. this section provides requirements for agency furnished products

1.02 DEFINITIONS

A. Seller: The party under separate contract with Agency to furnish the products or special services specified herein.

1.03 AGENCY-FURNISHED PRODUCTS

A. (Item Description):

1. Quantity: **[B: .]**
2. **[C: Point of receipt: .]**
3. Estimated date of arrival: Between **[E:]**.
4. Equipment or facility necessary for receipt and unloading of product: **[F: .]**
5. Estimated weight of product: **[G: .]**
6. Special handling or storage instructions: **[H: .]**

B. Parts of the Process Instrumentation and Control System (PICS) applications software programming will be performed by Engineer.

1.04 INFORMATION FURNISHED BY AGENCY

A. Shop drawings related to Agency-furnished products will be made available for Contractor's use in performing the work under this section.

B. Manufacturer's installation, operation, and maintenance instructions for Agency-furnished products will be made available.

1.05 SUBMITTALS

A. Action Submittals:

1. Shop Drawings:
   a. Show layout, location, and identification of materials provided by Contractor for installation of Agency-furnished products.

b. Include pipe, fittings, valves, specialties, hangers, supports, equipment, and required specialties.
c. Accurately show openings in floors, walls, and other parts of structure.
d. Provide electrical and instrumentation diagrams to indicate connecting and interconnecting electrical and control work.
e. Submit complete list of materials to be furnished, and include data necessary to allow Agency to determine their fitness for the work.
f. Samples: **[G:]**

1.06 TRANSFER OF PRODUCTS

A. Unless indicated otherwise, items will be furnished f.o.b. the Project Site.

B. Upon delivery, conduct with Agency a joint inspection for the purpose of identifying product, general verification of quantities, and observation of apparent condition. Such inspection will not be construed as final or as receipt of any product that, as a result of subsequent inspections and tests, are determined to be nonconforming.

C. Damaged or incomplete products to be returned for replacement will not be unloaded, except as necessary to expedite return shipment. Agency will submit claims for transportation damage and expedite replacement of damaged, defective, or deficient items.

D. Indicate signed acceptance of delivery on a copy of the invoice.

E. If Contractor is not prepared to accept delivery of Agency-furnished products by either the specified Estimated Date of Arrival or such Agency-confirmed delivery date, as specified herein, associated costs incurred by Agency shall be borne by Contractor. Such costs may include, but not be limited to, demurrage, interest, insurance costs, additional administrative and engineering costs, additional factory and field technical support, additional storage and reshipping costs, cost escalation, and extended warranty costs due.

1.07 UNLOADING, STORAGE AND MAINTENANCE

A. Subsequent to transfer, Contractor shall have complete responsibility for unloading Agency-furnished products. Unload product in accordance with manufacturers' instructions, or as specified.

B. Store, protect, and maintain product to prevent damage until final acceptance of completed work. Damage to or loss of products after date of transfer to Contractor shall be repaired to original condition, or replaced with new identical products, at the discretion of Engineer.

C. Maintain complete inventory of all Agency-furnished products after their transfer to Contractor.

1.08 SCHEDULING AND SEQUENCING

A. Include sequencing constraints specified herein as part of Progress Schedule.

B. Agency will keep Contractor informed of probable delivery date changes.

C. Agency will confirm delivery date with Contractor 10 days prior to scheduled delivery, and within 24 hours of expected delivery time.

D. Where a preinstallation meeting is required by this Section, provide a minimum of 10 days' advance written notice to Agency of the proposed date for starting installation.

E. Provide a minimum of 10 days notice to Agency that Agency-furnished product is ready for all special services listed herein to be furnished by Agency through its contract with seller. Contractor shall bear the cost of all damages assessed to Agency by seller resulting from delays caused by Contractor.

1.09 EXTRA MATERIALS

A. Unless otherwise specified, Agency will take acceptance of, and be responsible for storing associated extra materials and special tools upon delivery.

1.10 PREINSTALLATION MEETING

A. Arrange and attend a preinstallation meeting with the Agency to review general procedures, erection and installation instructions, and installation sequence.

B. Additional meetings prior to installation may be required, as determined by Agency, to transmit Agency's installation instructions to Contractor.

MATERIALS

2.01 **NOT USED**

CONSTRUCTION

3.01 4020.30 INSTALLATION

A. Install products in conformance with Agency-furnished product shop drawings and installation instructions.

B. Provide all interconnecting structures, equipment, piping, electrical and instrumentation work, finish painting, and appurtenances to achieve a complete and functional system.

C. Provide foundation pads for Agency-furnished products as shown. Verify exact dimensions and configuration of all pads, including penetrations, with Agency-furnished product shop drawings.

D. Anchor Bolts:

1. Where required, provide anchor bolts, fasteners, washers, and templates needed for installation of Agency-furnished equipment.
2. Size and locate anchor bolts in accordance with Agency-furnished product shop drawings and installation instructions.

E. Mechanical and electrical equipment shall be properly aligned, plumb and level, with no stresses on connecting piping or conduit.

F. Verify direction of motor rotation before starting equipment drives.

G. Verify operability and safety of electrical system needed to operate equipment. Check electrical system for continuity, phasing, grounding, and proper functions.

H. Pump Installation:

1. Level base by means of steel wedges (steelplates and steel shims). Wedge taper not greater than 1/4 inch per foot. Use double wedges to provide level bearing surface for the pump and driver base. Accomplish wedging so there is no change of level or springing of baseplate when anchor bolts are tightened.
2. Adjust pump assemblies so driving units are properly aligned, plumb, and level with driven units and all interconnecting shafts and couplings. Do not compensate for misalignment by use of flexible couplings.

3. After pump and driver have been set in position, aligned, and shimmed to proper elevation, grout space between bottom of baseplate and concrete foundation with a poured, nonshrinking grout of the proper category. Remove wedges after grout is set and pack void with grout.
4. Connect suction and discharge piping without imposing strain to pump flanges. Pump discharge and suction flexible couplings or bellows shall not be considered to compensate for misalignment.
5. Pipe pump drain(s) to hub drain or scupper.

3.02 FIELD FINISHING

A. Products will be delivered with prime and finish coat(s) applied.

1. Finish coat as specified in Section 09 90 00, Painting and Coating.
2. Touch up or repair damage to coatings resulting from unloading, storage, installation, testing, and startup.
3. If finish coats are damaged extensively after transfer, completely repaint.
4. Touch up, repair, or complete repainting shall match color of original paint, and shall be fully compatible with applied primers and finish.

3.03 PRODUCT PROTECTION

A. Immediately after installation, lubricate components in accordance with manufacturer's instructions.

B. Follow manufacturer's instructions for protection and maintenance during storage, after installation but prior to testing and startup, and after startup but prior to acceptance.

C. Furnish incidental supplies including lubricants, cleaning fluids, and similar products as needed for protecting and maintaining the Agency-furnished products.

3.04 TESTS AND INSPECTION

A. Perform tests and inspections of installed products in accordance with requirements shown herein, Section 01 91 14, Equipment Testing and Facility Startup, and manufacturer's instructions.

1. Functional Test: **[A: .]**
2. Performance Test: **[A: .]**

3.05 SUPPLEMENT

A. The supplement listed below, following “End of Section,” is a part of this Specification:

1. Agency Furnished Material, Product, or Equipment Transfer.

END OF SECTION

AGENCY FURNISHED MATERIAL, PRODUCT, OR EQUIPMENT TRANSFER

DATE: _____

ATTACHMENT TO DAILY LOG NO: _____ SHEET 7 OF 7

DAY: _____

PROJECT: _____ CITY PROJ _____

DEVELOPER (IF APPLICABLE): _____

CONTRACTOR: _____

INSPECTOR: _____

THE FOLLOWING MATERIAL, PRODUCT, OR EQUIPMETN IS HEREBY TRANSFERRED FROM AGENCY TO CONTRACTOR WITH THE FOLLOWING PROVISIONS:

1. Transfer of this equipment does not relieve the Contractor of any responsibility under the Contract.
2. If, at any time, other work is necessary on the subject equipment, the Contractor will arrange with the Agency for a suitable time to perform the work.
3. The guarantee warranty period as defined in the Specifications for this Contract shall commence upon this _____ day of _____, 20 _____ for the equipment itemized below.

EQUIPMENT:

(PROVIDE DOCUMENTATION FROM EQUIPMENT MANUFACTURER REGARDING GUARANTEE WARRANTY, AS APPROPRIATE)

DESCRIPTION: *(Include Manufacturer, Serial No., Model No.'s, Location, Appurtenances)*

COMMENTS OR EXCEPTIONS: *(Note Any Required Action and Responsibility)*

City's Consultant (if any) (name & company name)	Date
Contractor's Representative	Date
Agency's Representative	Date

SECTION 04030
EQUIPMENT TESTING, FACILITY STARTUP, AND COMMISSIONING

DESCRIPTION

1.01 SCOPE

A. This section describes requiremetns fir equipment testing, facilty startup, and commissioning

1.02 PURPOSE

A. Applicable Projects: This document applies for projects related to design and construction of freshwater and wastewater facilities. Applicable projects are typically small in size (one or two facilities) and most often located remotely from the main multi-facility treatment plants. Examples include, but are not limited to the following:

1. Freshwater pump stations.
2. Reservoirs.
3. System monitoring and/or control stations (pressure, flow, etc.).
4. Wastewater lift stations.
5. Chemical injection stations.

1.03 DEFINITIONS

A. Facility: Entire Project, or an agreed-upon portion, including all of its unit processes.

B. Functional Test: Test or tests in presence of Engineer and Agency to demonstrate that installed equipment meets manufacturer's installation, calibration, and adjustment requirements and other requirements as specified.

C. Performance Test: Test or tests performed after any required functional test in presence of Engineer and Agency to demonstrate and confirm individual equipment meets performance requirements specified in individual sections.

D. Process Instrumentation and Control System (PICS): The system used for process measurement (flow, level, pressure, temperature, etc), monitoring, and control. Includes field instruments, control panels, programmable logic controllers, workstations, servers, software, networks, and radio system components.

E. Unit Process: As used in this section, a unit process is a portion of the facility that performs a specific process function, such as pumping, disinfection, and odor control. For meter vaults and small pump

stations, reservoirs, and wells, the facilities are often not subdivided into separate unit processes.

F. Facility Performance Demonstration:

1. A demonstration, conducted by Contractor, with assistance of Agency, to demonstrate and document the performance of the entire operating facility, both manually and automatically (if required), based on criteria developed in conjunction with Agency and as accepted by Engineer.
2. Such demonstration is for the purposes of (i) verifying to Agency entire facility performs as a whole, and (ii) documenting performance characteristics of completed facility for Agency's records. Neither the demonstration nor the evaluation is intended in any way to make performance of a unit process or entire facility the responsibility of Contractor, unless such performance is otherwise specified.

G. Abbreviations:

1. FDT: Factory Demonstration Test.
2. HMI: Human-Machine Interface.
3. I&C: Instrumentation and Control.
4. I/O: Input and Output.
5. O&M: Operation and Maintenance.
6. P&ID: Process and Instrument Diagram.
7. PC: Personal Computer.
8. PICS: Process Instrumentation and Control System.
9. PLC: Programmable Logic Controller.
10. PMOM: Project Management Operations Manual.
11. SCADA: Supervisory Control and Data Acquisition.

1.04 REFERENCES

A. Refer to the City of Bend PMOM for additional coordination with City of Bend standard requirements. A copy of Bend's PMOM can be provided by the City's project manager upon request.

1.05 SUBMITTALS

A. Informational Submittals:

1. PICS Integrator Statement of Qualification.
2. Facility Startup and Performance Demonstration Plan.
3. Manufacturer's Certificate of Proper Installation (provide where specified).
4. Functional and performance test results.

5. PICS Testing Related Submittals:
    a. PICS Factory Demonstration Test:
        1) Preliminary Test Procedures: Outline of proposed tests, forms, and checklists.
        2) Final Test Procedures:
            a) Proposed test procedures, forms, and checklists.
            b) Capacity, Timing, and Simulation: Describe simulation and monitoring methods used to demonstrate compliance with capacity and timing requirements.
        3) Test Documentation: Copy of signed off test results.
    b. PICS Functional Test:
        1) Preliminary Test Procedures: Outline of proposed tests, forms, and checklists.
        2) Final Test Procedures: Proposed test procedures, forms, and checklists.
        3) Test Documentation:
            a) Copy of signed-off test results.
            b) Completed component calibration sheets.
    c. PICS Performance Test:
        1) Preliminary Test Procedures: Outline of proposed tests, forms, and checklists.
        2) Final Test Procedures: Proposed test procedures, forms, and checklists.
        3) Test Documentation: Copy of signed-off test results.
6. Completed Unit Process Startup Form for each unit process.
7. Completed Facility Performance Demonstration/Certification Form.

1.06 PICS QUALITY ASSURANCE

A. PICS Integrator Qualifications: Minimum of 5 years' experience providing, integrating, installing, and starting up similar systems as required for this Project.

B. PICS Coordination Meetings:

1. Engineer will schedule meetings at Site, conducted monthly, to review specific requirements of PICS work.
2. Additional meetings will be required to coordinate installation, testing, and startup of the PICS per Section 2950 Instrumentation and Control for Process Systems.
3. Attendees will include:
    a. Contractor.
    b. Agency.
    c. PICS Subcontractor/Installer.
    d. Engineer's Representatives.

4. Refer to Section 01 31 19, Project Meetings, for additional requirements for project meetings.
5. PICS Schedule Coordination Meeting:
    a. Timing: Following Engineer review of PICS Schedule.
    b. Purpose: Discuss Engineer's comments and resolve scheduling issues.

1.07 PICS SEQUENCING AND SCHEDULING

A. Prerequisite Activities and Lead Times: Do not start following key Project activities until prerequisite activities and lead times listed below have been completed and satisfied:

1. PICS Test Prerequisite: Associated PICS test procedures Submittals completed.
2. PLC and HMI Shipment to Site (Prerequisites):
    a. Approval of PICS Shop Drawings and preliminary operation and maintenance data.
    b. PICS FDT completed.
3. PICS Functional Test Prerequisites:
    a. Instruments installed and wired.
    b. Power available to all PICS components.
    c. PLC and HMI installation complete.
    d. Network cabling complete.
4. PICS Performance Test Prerequisite: PICS Functional Test completed and facility started up.

1.08 FACILITY STARTUP AND PERFORMANCE DEMONSTRATION PLAN

A. Develop a written plan, in conjunction with Agency's operations personnel; to include the following:

1. Step-by-step instructions for startup of each unit process and the complete facility.
2. Unit Process Startup Form (sample attached), to minimally include the following:
    a. Description of the unit process, including equipment numbers/nomenclature of each item of equipment and all included devices.
    b. Detailed procedure for startup of the unit process, including valves to be opened/closed, order of equipment startup, etc.
    c. Startup requirements for each unit process, including water, power, chemicals, etc.
    d. Space for evaluation comments.
3. Facility Performance Demonstration/Certification Form (sample attached), to minimally include the following:
    a. Description of unit processes included in the facility startup.
    b. Sequence of unit process startup to achieve facility startup.

c. Description of computerized operations, if any, included in the facility.
d. Contractor certification facility is capable of performing its intended function(s), including fully automatic operation.
e. Signature spaces for Contractor and Engineer.

MATERIALS

2.01 **NOT USED**

CONSTRUCTION

3.01 4030.30 GENERAL

A. Facility Startup Meetings: Schedule, in accordance with requirements of Section 01 31 19, Project Meetings, to discuss test schedule, test methods, materials, chemicals and liquids required, facilities operations interface, and Agency involvement.

B. Contractor's Testing and Startup Representative:

1. Designate and furnish one or more personnel to coordinate and expedite testing and facility startup.
2. Representative(s) shall be present during startup meetings and shall be available at all times during testing and startup.
3. PICS Integrator shall observe PICS equipment installation to extent required in order to provide Certificates of Proper Installation.
4. PICS Site representative shall supervise and coordinate onsite PICS activities.

C. Provide temporary valves, gauges, piping, test equipment and other materials and equipment required for testing and startup.

D. Provide Subcontractor and equipment manufacturers' staff adequate to prevent delays. Schedule ongoing work so as not to interfere with or delay testing and startup.

E. Agency will:

1. Provide water, power, chemicals, and other items as required for startup, unless otherwise indicated.
2. Operate process units and facility with support of Contractor.
3. Provide labor and materials as required for laboratory analyses.
4. If Agency-furnished products are to be used on the Project:
   a. Furnish assistance of manufacturer's representative(s) for Agency-furnished products, as specified in Section 01 64 00, Agency-Furnished Products.

b. Make available spare parts, special tools, and operation and maintenance information for Agency-furnished products.

3.02 EQUIPMENT TESTING

A. Preparation:

1. Complete installation before testing.
2. Furnish qualified manufacturers' representatives, when required by individual Specification sections.
3. Obtain and submit from equipment manufacturer's representative Manufacturer's Certificate of Proper Installation Form, in accordance with Section 01 43 33, Manufacturers' Field Services, when required by individual Specification sections.
4. Equipment Test Report Form: Provide written test report for each item of equipment to be tested, to include the minimum information:
   a. Agency/Project Name.
   b. Equipment or item tested.
   c. Date and time of test.
   d. Type of test performed (Functional or Performance).
   e. Test method.
   f. Test conditions.
   g. Test results.
   h. Signature spaces for Contractor and Engineer as witness.
5. Cleaning and Checking: Prior to beginning functional testing:
   a. Calibrate testing equipment in accordance with manufacturer's instructions.
   b. Inspect and clean equipment, devices, connected piping, and structures to ensure they are free of foreign material.
   c. Lubricate equipment in accordance with manufacturer's instructions.
   d. Turn rotating equipment by hand when possible to confirm that equipment is not bound.
   e. Open and close valves by hand and operate other devices to check for binding, interference, or improper functioning.
   f. Check power supply to electric-powered equipment for correct voltage.
   g. Adjust clearances and torque.
   h. Test piping for leaks.
6. Ready-to-test determination will be by Engineer based at least on the following:
   a. Acceptable Operation and Maintenance Data.
   b. Notification by Contractor of equipment readiness for testing.
   c. Receipt of Manufacturer's Certificate of Proper Installation, if so specified.

d. Adequate completion of work adjacent to, or interfacing with, equipment to be tested, including items to be furnished by Agency.
e. Availability and acceptability of manufacturer's representative, when specified, to assist in testing of respective equipment.
f. Satisfactory fulfillment of other specified manufacturer's responsibilities.
g. Equipment and electrical tagging complete.
h. Delivery of all spare parts and special tools.

B. Functional Testing:

1. Conduct as specified in individual Specification sections.
2. Notify Agency and Engineer in writing at least 10 days prior to scheduled date of testing.
3. Prepare Equipment Test Report summarizing test method and results.
4. When, in Engineer's opinion, equipment meets functional requirements specified, such equipment will be accepted for purposes of advancing to performance testing phase, if so required by individual Specification sections. Such acceptance will be evidenced by Engineer/Agency's signature as witness on Equipment Test Report.
5. Special requirements for PICS Functional Testing are included in this Section.

C. Performance Testing:

1. Conduct as specified in individual Specification sections.
2. Notify Engineer and Agency in writing at least 10 days prior to scheduled date of test.
3. Performance testing shall not commence until equipment has been accepted by Engineer as having satisfied functional test requirements specified.
4. Type of fluid, gas, or solid for testing shall be as specified.
5. Unless otherwise indicated, furnish labor, materials, and supplies for conducting the test and taking samples and performance measurements.
6. Prepare Equipment Test Report summarizing test method and results.
7. When, in Engineer's opinion, equipment meets performance requirements specified, such equipment will be accepted as to conforming to Contract requirements. Such acceptance will be evidenced by Engineer's signature on Equipment Test Report.
8. Special requirements for PICS Performance Testing are included in this Section.

3.03 STARTUP OF UNIT PROCESSES

A. Prior to unit process startup, equipment within unit process shall be accepted by Engineer as having met functional and performance testing requirements specified.

B. Startup sequencing of unit processes shall be as chosen by Contractor to meet schedule requirements.

C. Make adjustments, repairs, and corrections necessary to complete unit process startup.

D. Startup shall be considered complete when, in opinion of Engineer, unit process has operated in manner intended for 5 continuous days without significant interruption. This period is in addition to functional or performance test periods specified elsewhere.

E. Significant Interruption: May include any of the following events:

1. Failure of Contractor to provide and maintain qualified onsite startup personnel as scheduled.
2. Failure to meet specified functional operation for more than 2 consecutive hours.
3. Failure of any critical equipment or unit process that is not satisfactorily corrected within 5 hours after failure.
4. Failure of any noncritical equipment or unit process that is not satisfactorily corrected within 8 hours after failure.
5. As determined by Engineer.

F. A significant interruption will require startup then in progress to be stopped. After corrections are made, startup test period to start from beginning again.

3.04 PICS TESTING

A. PICS Factory Testing:

1. General:

a. Purpose: To confirm that PICS is operational before shipment to the Project Site.
b. Scope:
   1) Test each control panel to confirm the fabricator's wiring and the panel functions.
   2) For control panels with PLCs, include testing for each control panel to confirm the fabricator's wiring between the panel's field terminals and the individual points on PLC I/O modules.
   3) Test Operation of Communications:

a) Between PLCs and remote I/O.
b) Between PLCs and computers.
c) Radio communication testing is not required.

4) The testing is broken into two parts: 1) Unwitnessed Factory Testing and 2) (Witnessed) Factory Demonstration Testing. The panel fabricator will complete unwitnessed factory testing to find and correct problems before executing (witnessed) factory demonstration testing to prove to the Agency's agent that the system is ready for shipment to the Project Site.

c. Location: PICS Integrator's facility.

d. Participation and Approvals:
1) Engineer may actively participate in many of the tests.
2) Engineer reserves right to test or retest specified functions.
3) Engineer's decision will be final regarding acceptability and completeness of testing.

e. Procedures, Forms, and Checklists:
1) Except for Unwitnessed Factory Test, conduct tests in accordance with, and documented on, Engineer accepted procedures, forms, and checklists.
2) Describe each test item to be performed.
3) Provide space after each test item description for sign off by appropriate party following satisfactory completion.

f. Required Test Documentation: Test procedures, forms, and checklists signed by Engineer and Contractor.

g. Conducting Tests:
1) Provide special testing materials and equipment.
2) Wherever possible, perform tests using actual process variables, equipment, and data.
3) If not practical to test with real process variables, equipment, and data provide suitable means of simulation.
4) Define simulation techniques in test procedures.
5) Test Format: Cause and effect.
a) Person conducting test initiates an input (cause).
b) Specific test requirement is satisfied if correct result (effect), occurs.

2. PICS Unwitnessed Factory Test (UFT):

a. Purpose: To find and correct problems with PICS components and systems before executing (witnessed) factory demonstration testing.

b. Scope: Inspect and test PICS to ensure it is operational and ready for FDT.

c. Integrated Test:
    1) Interconnect and test PICS, except for primary elements and smaller panels.
    2) Exercise and test functions.
    3) Provide standalone testing of smaller panels.
    4) Simulate inputs and outputs for primary elements, final control elements, and panels excluded from test.
d. Correct deficiencies found and complete prior to Factory Demonstration Test.

3. PICS Factory Demonstration Tests (FDT):

a. Notify Engineer of test schedule 2 weeks prior to start of test.
b. Scope: Test entire PICS, with exception of primary elements, final control elements, and certain smaller panels, to demonstrate it is operational.
c. Purpose: To prove to the Agency's agent that the system is ready for shipment to the Project Site.
d. Tests:
    1) Panel Testing:
        a) Simulate each discrete signal at terminal strip.
        b) Simulate correctness of each analog signal using current source.
        c) For PLC panels, execute testing with PLC software to confirm I/O wiring and software addressing
    2) Communications Testing: Test operation of communications between PLCs and remote I/O and between PLCs and computers.
    3) Loop-Specific Functions: Demonstrate functions shown on P&IDs, control diagrams, and loop specifications:
        a) One of each type function; for example, if there are filter backwash sequence control for several identical filters, demonstrate controls for one filter.
        b) One of each type of function in each panel; for example, but not limited to annunciator operation, controller operation, and recorder operation.
        c) All required and shown functions for 100 percent of loops.
    4) Nonloop-Specific Functions:
        a) Capacity: Demonstrate that PICS has required spare capacity for expansion. Include tests for both storage capacity and processing capacity.
        b) Timing: Include tests for timing requirements.

c) Diagnostics: Demonstrate online and offline diagnostic tests and procedures.

e. Correct deficiencies found and complete prior to shipment to Site.

f. Failed Tests:
   1) Repeat and witnessed by Engineer.
   2) With approval of Engineer, certain tests may be conducted by PICS Integrator and witnessed by Engineer as part of PICS Functional Test.

g. Make following documentation available to Engineer at test Site both before and during PICS FDT:
   1) Drawings, Specifications, Addenda, and Change Orders.
   2) Master copy of PICS FDT procedures.
   3) List of equipment to be tested including make, model, and serial number.
   4) Approved hardware Shop Drawings for equipment being tested.
   5) Approved preliminary software documentation Submittal.

h. Daily Schedule for PICS FDT:
   1) Begin each day with meeting to review day's test schedule.
   2) End each day with each meeting to review day's test results and to review or revise next day's test schedule.

B. PICS Field Testing:

1. General:

a. Purpose: To confirm that the entire PICS, operating with actual field equipment and final control system software configuration, provides the functions defined in the design documents.

b. Scope:
   1) Includes testing of entire PICS, including but not limited to instruments, control panels, PLCs, computers (HMI workstations, servers, etc), control system software, networks, and radio communication.
   2) Functional Testing Major Objectives:
      a) Check installation of PICS components and systems to make sure they are ready for operation.
      b) Calibrate instruments.
      c) Adjust valves.
      d) Test Field Wiring and Software Addressing for all PLC I/O: Perform point-to-point testing for all

PLC I/O associated with the project. The testing will confirm the wiring between each field device and its associated PLC I/O module terminals using actual or simulated I/O at the field terminals and verified in the control system software.

e) Test Communication Network Functions: Perform testing to confirm successful network and radio communication between PICS components:
   (1) Between PLCs and remote I/O.
   (2) Between PLCs and computers (HMI workstations, servers, etc.).
   (3) Between remote station and master station.
   (4) Between remote stations.

3) Performance Testing Major Objectives:
   a) Test Control System Software Functions: Perform testing to confirm that all automated monitoring and control functions operate as intended.
   b) Tune loops.
   c) Make final adjustments to automated monitoring and control parameters.

4) For equipment not provided by PICS Integrator, but that directly interfaces with PICS, verify the following conditions:
   a) Proper installation.
   b) Calibration and adjustment of positioners and I/P transducers.
   c) Correct control action.
   d) Switch settings and dead bands.
   e) Opening and closing speeds and travel stops.
   f) Input and output signals.

5) Refer to functional testing and performance testing for specific test requirements.

c. Required Coordination and Notification Prior to Testing:
   1) Coordinate PICS testing with Agency and affected Subcontractors.
   2) Notify Engineer of Performance Test schedule 4 weeks prior to start of test.

d. Participation and Approvals:
   1) Engineer may actively participate in tests.
   2) Engineer reserves right to test or retest specified functions.
   3) Engineer's decision will be final regarding acceptability and completeness of testing.

2. Testing Sequence:

a. Provide Functional Tests and Performance Tests for facilities as required to support staged construction and startup.
b. Refer to Article Sequence of Work under Section 01 31 13, Project Coordination, for a definition of project milestones.
c. Refer to Section 01 91 14, Equipment Testing, Facility Startup, and Commissioning, for overall testing requirements.
d. Completion: When tests (except Functional Test) have been completed and required test documentation has been accepted.

3. PICS Functional Testing:

a. Scope: Prior to Facility Startup and Performance Evaluation period for each facility, inspect, test, and document that associated PICS equipment, including control system software, is ready for operation.
b. Required testing includes:
    1) Loop/Component Inspections and Tests:
        a) These inspections and tests do not require witnessing.
        b) Check PICS for proper installation, calibration, and adjustment on loop-by-loop and component-by-component basis.
        c) Provide space on forms for signoff by PICS Integrator.
        d) Use loop status report to organize and track inspection, adjustment, and calibration of each loop and include the following:
            (1) Project name.
            (2) Loop number.
            (3) Tag number for each component.
            (4) Checkoffs/Signoffs for Each Component:
                (a) Tag/identification.
                (b) Installation.
                (c) Termination wiring.
                (d) Termination tubing.
                (e) Calibration/adjustment.
            (5) Checkoffs/Signoffs for the Loop:
                (a) Panel interface terminations.
                (b) I/O interface terminations, with PLCs.
            (6) I/O Signals for PLCs are Operational: Received/sent, processed, adjusted.
            (7) Total loop operational.
            (8) Space for comments.
        e) Component calibration sheet for each active I&C component (except simple hand switches, lights,

gauges, and similar items) and each PLC I/O module and include the following:

(1) Project name.
(2) Loop number.
(3) Component tag number or I/O module number.
(4) Component code number for I&C elements.
(5) Manufacturer for I&C elements.
(6) Model number/serial number for I&C elements.
(7) Summary of Functional Requirements; For Example:
    (a) Indicators and recorders, scale and chart ranges.
    (b) Transmitters/converters, input and output ranges.
    (c) Computing elements' function.
    (d) Controllers, action (direct/reverse) and control modes (P, I, D).
    (e) Switching elements, unit range, differential (fixed/adjustable), reset (auto/manual).
    (f) I/O Modules: Input or output.
(8) Calibrations, for example, but not limited to:
    (a) Analog Devices: Actual inputs and outputs at 0, 10, 50, and 100 percent of span, rising and falling.
    (b) Discrete Devices: Actual trip points and reset points.
    (c) Controllers: Mode settings (P&ID).
    (d) I/O Modules: Actual inputs or outputs of 0, 10, 50, and 100 percent of span, rising and falling.
    (e) Space for comments.

f) Maintain loop status reports, valve adjustment sheets, and component calibration sheets at Site, and make them available to Engineer at all times.
g) Engineer reviews loop status sheets and component calibration sheets and spot-check their entries periodically, and upon completion of Preparation for Testing. Correct deficiencies found.
h) Test control system software using real field sensors and equipment. Plant interlocking and communications with PLC(s) and HMI tested on loop-by-loop basis.

c. Required Test Documentation:

1) Test procedures, forms, and checklists. Signed by Engineer and Contractor except for Functional Test items signed only by Contractor.
2) Forms: See Loop Status Report, Instrument Calibration Sheet, and I&C Valve Adjustment Sheet referenced in Article Supplements.

d. Requirements for Test Completion:
1) Functional Test has been conducted.
2) Engineer has spot-checked associated test forms and checklists in field.

4. PICS Performance Testing During and After Facility Startup:

a. Once a facility's Functional Test has been completed and that facility has been started up, perform a witnessed Performance Test on associated PICS equipment to demonstrate that it is operating as required by Contract Documents. Demonstrate each required function on a paragraph-by-paragraph, loop-by-loop, and site-by-site basis.
b. Loop-specific and nonloop-specific tests same as required for FDT except that entire installed PICS tested using actual process variables and functions demonstrated.
c. Perform local and manual tests for each loop before proceeding to remote and automatic modes.
d. Where possible, verify test results using visual confirmation of process equipment and actual process variable. Unless otherwise directed, exercise and observe devices supplied by others, as needed to verify correct signals to and from such devices and to confirm overall system functionality. Test verification by means of disconnecting wires or measuring signal levels is acceptable only where direct operation of plant equipment is not possible.
e. Make updated versions of documentation required for Performance Test available to Engineer at Site, both before and during tests.
f. Make O&M data available to Engineer at Site both before and during testing.
g. Follow daily schedule required for FDT.
h. Determination of Ready for Operation: When Functional Test has been completed.
i. Refer to examples of Performance Test procedures and forms in Article Supplements.

3.05 FACILITY PERFORMANCE DEMONSTRATION

A. When, in the opinion of Engineer, startup of all unit processes has been achieved, sequence each unit process to the point that facility is operational.

B. Demonstrate proper operation of required interfaces within and between individual unit processes.

C. After facility is operating, complete performance testing of equipment and systems not previously tested.

D. Document, as defined in Facility Startup and Performance Demonstration Plan, the performance of the facility including its computer system.

E. Certify, on the Facility Performance Demonstration/Certification Form, that facility is capable of performing its intended function(s), including fully automatic and computerized operation.

3.06 MECHANICAL SYSTEM COMMISSIONING

A. Functional Test:

1. Centrifugal Pumps: As specified in individual pump specifications. If no functional test requirements are specified in pump specifications, then the following functional test shall be performed at no additional cost to Agency.
    a. Alignment: Test complete assemblies for correct rotation, proper alignment and connection, and quiet operation.
    b. Flow Output: Measured by plant instrumentation and storage volumes.
    c. Operating Temperatures: Monitor bearing areas on pump and motor for abnormally high temperatures.
    d. Test for continuous 3-hour period.
    e. Test Report Requirements: In accordance with Hydraulic Institute Standards for submersible pump tests HIS 1.6 and 11.6.
    f. Vibration Test:
        1) Test with units installed and in normal operation, and discharging to connected piping systems at rates between low discharge head and high discharge head conditions specified, shall not develop vibration exceeding limits specified in HIS 11.6.
        2) If units exhibit vibration in excess of limits specified adjust as necessary. Units that cannot be adjusted or modified to conform as specified shall be replaced.
        3) Flow Output: Measured by existing instrumentation and storage volumes.

2. Metering Pumps:
    a. Alignment: Test complete assemblies for correct rotation (as applicable), proper alignment and connection, and quiet operation.

B. Performance Test:

1. Centrifugal Pumps:
    a. Perform under actual or approved simulated operating conditions.
    b. Test for a continuous 3-hour period without malfunction.
2. Metering Pumps:
    a. Perform under actual or approved simulated operating conditions.
    b. Test for a continuous 3-hour period without malfunction.

3.07 SUPPLEMENTS

A. The supplements listed below, following “End of Section,” are a part of this Specification:

1. Unit Process Startup Form.
2. Facility Performance Demonstration/Certification Form.
3. Loop Status Report—Example Format.
4. Instrument Calibration Sheet—Example—Analyzer/Transmitter.
5. I&C Valve Adjustment Sheet—Example.
6. Performance Test Sheet—Example.
7. Manufacturer’s Certificate of Proper Installation.

END OF SECTION

UNIT PROCESS STARTUP FORM

AGENCY: _____ **PROJECT:** _____

Unit Process Description: (Include description and equipment number of all equipment and devices):

_____

_____

_____

_____

Startup Procedure (Describe procedure for sequential startup and evaluation, including valves be opened/closed, order of equipment startup, etc.):

_____

_____

_____

_____

_____

Startup Requirements (Water, power, chemicals, etc.): _____

_____

_____

Evaluation Comments: _____

_____

_____

_____

FACILITY PERFORMANCE DEMONSTRATION/CERTIFICATION FORM

AGENCY:_____ **PROJECT:**_____

Unit Processes Description (List unit processes involved in facility startup):

_____

_____

_____

_____

Unit Processes Startup Sequence (Describe sequence for startup, including computerized operations, if any):

_____

_____

_____

_____

_____

Contractor Certification that Facility is capable of performing its intended function(s), including fully automatic operation:

Contractor: _____ **Date:** _____**,** **20**____

Engineer: _____ **Date:** _____, **20**____
(Authorized Signature)

LOOP STATUS REPORT—EXAMPLE FORMAT Rev.06.05.92

Project Name: *City of Bend*	Project No. *123456*
FUNCTIONAL REQUIREMENTS:	
1. Measure, locally indicate, and transmit RAS flow to LP-10.	
2. At LP-10 indicate flow and provide flow control by modulation of FCV-10-2.	
3. Provide high RAS flow alarm on LP-10.	

COMPONENT STATUS (Check and initial each item when complete)

Tag Number	Delivered	Tag ID Checked	Installation	Termination Wiring	Termination Tubing	Calibration	
FE/FIT-10-2	*Jan-12-90 DWM*	*Jan-12-90 DWM*	*Feb-7-90 DWM*	*Mar-5-90 DWM*	*N.A.*	*May-6-90 VDA*	
FIC-10-2	*Jan-12-90 DWM*	*Jan-12-90 DWM*	*Mar-5-90 DWM*	*Apr-4-90 DWM*		*May-4-90 VDA*	
FSH-10-2	*Jan-12-90 DWM*	*Jan-12-90 DWM*	*Mar-5-90 DWM*	*Apr-4-90 DWM*		*May-7-90 VDA*	
FAH-10-2	*Jan-12-90 DWM*	*Jan-12-90 DWM*	*Mar-5-90 DWM*	*Apr-4-90 DWM*		*May-7-90 VDA*	
FCV-10-2	*Mar-2-90 DWM*	*Mar-2-90 DWM*	*Apr-20-90 DWM*	*Apr-30-90 DWM*		*May-16-90 VDA*	

REMARKS: None.

Loop Ready for Operation	By: *D.W. Munzer*	Date: *May-18-90*	Loop No.: *10-2*

INSTRUMENT CALIBRATION SHEET—EXAMPLE—ANALYZER/TRANSMITTER Rev.06.05.92

COMPONENT	MANUFACTURER		PROJECT
Code: *A7*	Name: *Leeds & Northrup*		Number: 123456
Name: *pH Element & Analyzer/Transmitter*	Model: *12429-3-2-1-7*	Serial #: *11553322*	Name: *City of Bend*

FUNCTIONS

	RANGE	VALUE	UNITS	COMPUTING FUNCTIONS? N	CONTROL? N
Indicate? Y Record? N	Chart:			Describe:	Action? direct / reverse Modes? P / I / D
	Scale:	*1-14*	*pH units*		SWITCH? N Unit Range:
Transmit/	Input:	*1-14*	*pH units*		Differential: fixed/adjustable
Convert? Y	Output:	*4-20*	*mA dc*		Reset? automatic / manual

ANALOG CALIBRATIONS							DISCRETE CALIBRATIONS					Note No.
REQUIRED			AS CALIBRATED				REQUIRED			AS CALIBRATED		
Input	Indicated	Output	Increasing Input		Decreasing Input		Number	Trip Point	Reset Pt.	Trip Point	Reset Pt.	
			Indicated	Output	Indicated	Output		(note rising or falling)		(note rising or falling)		
1.0	*1.0*	*4.0*	*1.0*	*4.0*	*1.0*	*3.9*	*1.*	*N.A.*		*N.A.*		
2.3	*2.3*	*5.6*	*2.2*	*5.5*	*2.3*	*5.6*	2.					*1.*
7.5	*7.5*	*12.0*	*7.5*	*11.9*	*7.5*	*12.0*	3.					
12.7	*12.7*	*18.4*	*12.7*	*18.3*	*12.6*	*18.3*	4.					
14.0	*14.0*	*20.0*	*14.0*	*20.0*	*14.0*	*20.0*	5.					
CONTROL MODE SETTINGS:			P: *N.A.*	I:	D:		6.					

#	NOTES:	Component Calibrated and Ready for Start-up
	1. Need to recheck low pH calibration solutions.	By: *J.D. Sewell*
		Date: *Jun-6-92*
		Tag No.: *AIT-12-6*[pH]

I&C VALVE ADJUSTMENT SHEET—EXAMPLE

Rev.06.05.92

PARTS	Project Name: *City of Bend*	Project Number: *123456*
Body	Type: *Vee-Ball*	Mfr: *Fisher Controls*
	Size: *4-inch*	Model: *1049763-2*
	Line Connection: *159 # ANSI Flanges*	Serial #: *1003220*
Operator	Type: *Pneumatic Diaphragm*	Mfr: *Fisher Controls*
	Action: *Linear – Modulated*	Model: *4060D*
	Travel: *3-inch*	Serial #: *2007330*
Positioner	Input Signal: *3-15 psi*	Mfr: *Fisher Controls*
	Action: *Direct - air to open*	Model: *20472T*
	Cam: *Equal percentage*	Serial #: *102010*
Pilot	Action:	Mfr:
Solenoid	Rating: *None*	Model: Serial #:
I/P	Input: *4-20 mA dc*	Mfr: *Taylor*
Converter	Output: *3-15 psi*	Model: *10-T-576-3*
	Action: *Direct*	Serial #: *1057-330*
Position	Settings: *Closed / Open 5 deg, rising*	Mfr: *National Switch*
Switch	Contacts: *Close / Close*	Model: *1049-67-3*
		Serial #: *156 &157*
Power	Type: *Pneumatic*	Air Set Mfr: *Air Products*
Supply	Potential: *40 psi*	Model: *3210D*
		Serial #: *1107063*

ADJUSTMENTS	Initial	Date	**VERIFICATION**	Initial	Date
Air Set	*JDS*	*Jun-06-92*	Valve Action	*JDS*	*Jun-03-92*
Positioner	*JDS*	*Jun-06-92*	Installation	*JDS*	*Jun-03-92*
Position Switches	*JDS*	*Jun-06-92*	Wire Connection	*JDS*	*Jun-04-92*
I/P Converter	*JDS*	*Jun-07-92*	Tube Connection	*JDS*	*Jun-04-92*
Actual Speed	*JDS*	*Jun-07-92*			

REMARKS: *Valve was initially installed backwards.*	**Valve Ready for Start-up**
Observed to be correctly installed May-25-92	By: *J.D. Sewell*
	Date: *Jun-07-92*
	Tag No.: *FCV-10-2-1*

PERFORMANCE TEST SHEET - EXAMPLE Rev.06.05.92

Project Name: *City of Bend*	Project No.: *123456*

Demonstration test(s): For each functional Requirement of the loop:
(a) List and number the requirement. (b) Briefly describe the demonstration test.
(c) Cite the results that will verify the required performance. (d) Provide space for signoff.

1. MEASURE EFFLUENT FLOW

1.a With no flow, water level over weir should be zero and

FIT indicator should read zero. *Jun-20-92 BDG*

2. FLOW INDICATION AND TRANSMISSION TO LP & CCS

With flow, water level and FIT indicator should be related by expression

*Q(MGD) = 429*H**(2/3) (H = height in inches of water over weir).*

Vary H and observe that following.

2.a Reading of FIT indicator. *Jun-6-92 BDG*

2.b Reading is transmitted to FI on LP-521-1 *Jun-6-92 BDG*

2.c Reading is transmitted and displayed to CCS. *Jun-6-92 BDG*

H(measured)	*0*	*5*	*10*	*15*
Q(computed)	*0*	*47.96*	*135.7*	*251.7*
Q(FIT indicator)	*0*	*48.1*	*137*	*253*
Q(LI on LP-521-1)	*0*	*48.2*	*138*	*254*
Q(display by CCS)	*0*	*48.1*	*136.2*	*252.4*

Forms/Sheets Verified	By	Date	**Loop Accepted By Agency**
Loop Status Report	*J.D. Sewell*	*May-18-92*	By: *J.D. Smith*
Instrument Calibration Sheet	*J.D. Sewell*	*May-18-92*	Date: *Jun-6-92*
I&C Valve Calibration Sheet	*N.A.*		
Performance Test	By	Date	
Performed	*J. Blow MPSDC Co.*	*Jun-6-92*	
Witnessed	*B. DeGlanville*	*Jun-6-92*	Loop No.: *30-12*

MANUFACTURER'S CERTIFICATE OF PROPER INSTALLATION

AGENCY _____ EQPT SERIAL NO:_____

EQPT TAG NO:_____ EQPT/SYSTEM:_____

PROJECT NO:_____ SPEC. SECTION:_____

I hereby certify that the above-referenced equipment/system has been:

(Check Applicable)

Installed in accordance with Manufacturer's recommendations.

Inspected, checked, and adjusted.

Serviced with proper initial lubricants.

Electrical and mechanical connections meet quality and safety standards.

All applicable safety equipment has been properly installed.

Functional tests.

System has been performance tested, and meets or exceeds specified performance requirements. (When complete system of one manufacturer)

Note: Attach any performance test documentation from manufacturer.

Comments:_____

_____

_____

_____

I, the undersigned Manufacturer's Representative, hereby certify that I am (i) a duly authorized representative of the manufacturer, (ii) empowered by the manufacturer to inspect, approve, and operate his equipment and (iii) authorized to make recommendations required to assure that the equipment furnished by the manufacturer is complete and operational, except as may be otherwise indicated herein. I further certify that all information contained herein is true and accurate.

Date: _____, 20___

Manufacturer:_____

By Manufacturer's Authorized Representative: _____
(Authorized Signature)

PART V

Construction Observation and Inspection Requirements

Part V-Construction Observation and Inspection Requirements

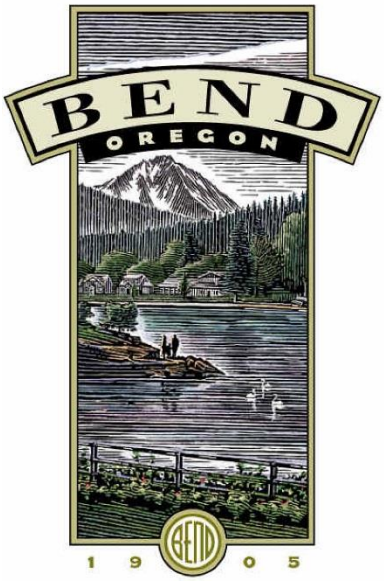

City of Bend, Oregon

Issued: August, 2015

Revised 6/29/2015

Contents

Section			Page
Contents			**iii**
Abbreviations and Acronyms			**v**
1.	**Introduction**		**1**
	1.1	Purpose	1
	1.2	Definitions	1
2.	**Inspection Authority and Requirements**		**3**
	2.1	General	3
	2.2	Authority of the City	3
	2.3	Role of the Engineer of Record	3
	2.4	Role of the Resident Project Representative	6
	2.5	Limitations of the Engineer of Record and Resident Project Representative	7
	2.6	Pre-Construction Meeting	7
	2.7	Changes to Approved Plans or Character of Work	8
2.7.1	Plan Revisions		9
	2.8	Modification Criteria	9
	2.9	Site Visits and Construction Observation	9
2.9.1	General		9
2.9.2	Limitations of City Inspection Services:		10
2.9.3	Advance Notification for City Inspection		10
	2.10	Communications	11`
2.10.1	Written Communications		11
	2.11	Record Drawings	11
2.11.1	Record Drawings		11
2.11.2	Record Drawing Stamp and Certification Statements		12
2.11.3	Survey and Field Installation Notes		13
2.11.4	Sanitary Sewer and Water Record Drawings		13
	2.12	Final Acceptance and Project Closeout	14
2.12.1	Warranty Period		15
2.12.2	Final Acceptance and Use of System Improvements		15
3.	**Other Considerations**		**17**
	3.1	Contractor Responsibilities	17
3.1.1	General		17
3.1.2	Public Notification		17
3.1.3	City of Bend Fire Department Requirements		17
	3.2	Construction	17
3.2.1	Work Hours, Trespass, Staging Areas, and Sanitation		17
	3.3	Contractor's Responsibility for Existing Utilities	21

3.4 Field Relocation 22
3.5 Blasting 22
4. Enforcement 23
4.1 General 23
4.1.1 Violation 23

Abbreviations and Acronyms

ANSI	American National Standards Institute
AWWA	American Water Works Association
CAgT	Certified Aggregate Technician
CAT-I	Certified Asphalt Technician I
CAT-II	Certified Asphalt Technician II
CCT	Concrete Control Technician
CDT	Certified Density Technician
CEBT	Certified Embankment and Base Technician
CIP	Capital Improvement Project
City	City of Bend, Oregon
CMDT	Certified Mix Design Technician
CSTT	Concrete Strength Testing Technician
ESCP	Erosion and Sediment Control Plan
MFTP	Manual of Field Test Procedures (ODOT)
MUTCD	Manual of Uniform Traffic Control Devices
ODOT	Oregon Department of Transportation
OSS	Oregon Standard Specifications
PFIA	Public Facilities Improvement Agreement
QCT	Quality Control Technician
PVC	Polyvinyl chloride

1. Introduction

1.1 Purpose

The purpose of this document is to provide clear expectations for Contractors, Developers, Engineers of Record and City staff engaged in construction of public infrastructure that will be accepted for ownership and maintenance by the City.

1.2 Definitions

Certified Test Technician – A test technician certified by ODOT as a Certified Aggregate Technician (CAgT), Certified Embankment and Base Technician (CEBT), Certified Density Technician (CDT), Certified Asphalt Technician I (CAT-I), Certified Asphalt Technician II (CAT-II), Certified Mix Design Technician (CMDT), or Quality Control Technician (QCT), Concrete Control Technician (CCT), Concrete Strength Testing Technician (CSTT) or approved other.

City Inspector – The person observing construction on behalf of the City to verify that the project is constructed in accordance with the approved construction documents and City of Bend Standards and Specifications. The City Inspector may be an employee of the City or may work for an entity contracting with the City to provide construction inspection services.

Contract Documents – For public improvement projects, Contract Documents are the contract between the City and the entity constructing the public improvements. For private development projects that include public improvements, the Contract Documents include, but are not limited to, the Public Improvement Facilities Agreement (PFIA), approved infrastructure plans, and the City of Bend Standards and Specifications.

Contractor – The entity constructing the work.

Engineer of Record or EOR – The licensed professional engineer providing professional engineering services. The Engineer of Record may be under contract with the City or a Developer, or other third party (i.e., franchised utility).

Developer – The entity that is paying for financing and constructing a utility, street, road, or other facility that will be owned and maintained by the City.

Private Development Project – A project owned and constructed by a private entity that includes public infrastructure to be transferred to the City for perpetual operations and maintenance (commonly water, sewer, stormwater, and street facilities).

Resident Project Representative or RPR – The authorized representative under the direction of the Engineer of Record assigned to the project to assist the Engineer of Record.

Page left intentionally blank

2. Inspection Authority and Requirements

2.1 General

The Public Facilities Improvement Agreement (PFIA) for private development projects must include provisions governing the structure of the City's inspection authority. For Development projects, unless otherwise indicated the PFIA, the Engineer of Record and their Resident Project Representative are authorized to observe construction to verify that materials, methods, and workmanship used by the Contractor to meet the requirements of the approved engineered specifications and construction documents.

2.2 Authority of the City

City Inspectors are authorized to represent the City Engineer to perform the following:

- Inspect work performed and materials furnished including, without limitation, the preparation, fabrication, or manufacture of materials to be used.
- Orally reject defective materials or work and confirm such rejection in writing.
- By oral order, temporarily suspend the work for improper prosecution pending the City Engineer's decision.
- Exercise additional delegated authority.

City Inspectors are not authorized to:

- Address apparent Contractor safety concerns (unless as otherwise stated).
- Accept work or materials except as delegated by the City Engineer.
- Alter or waive provisions of the Contract Documents.
- Give instructions or advice inconsistent with the approved Contract Documents.

The City Engineer, or authorized representative, and City Inspectors are authorized to visit public improvement construction sites to observe the progress and quality of Contractor's work. These inspections are not intended to be the sole inspection services provided for a private development project and are not meant to be exhaustive. The EOR shall provide construction inspection services.

The City Engineer shall designate a City Inspector as the primary point of contact for the City during the construction period. All initial inquires, clarifications, documentation and communications shall be coordinated through the designated City Inspector. The City Inspector shall coordinate with the City Engineer and other City Departments as needed throughout the construction period.

2.3 Role of the Engineer of Record

For private development projects, the EOR is the person responsible for the design of the public improvements in accordance with the Bend Standards and Specifications. The EOR is required to

provide construction phase services during the construction period of the project. These services include but are not limited to:

1. Pre-Construction Meeting – Attend and participate in the City's mandatory pre-construction meeting prior to commencement of any work on the site.

2. Schedules – Review Contractor schedules to determine applicability of the schedule to the major project milestones and critical path elements as required by the Contract Documents and Contractor's construction timeline. Any discrepancies or issues that would adversely affect the quality of work as defined in the Contract Documents or have a significant impact on existing City facilities shall be immediately reported to the City Inspector for evaluation and final determination.

3. Maintain a project log book of site visit reports containing the following applicable information:

    a. Names and contact information for all Contractors, subcontractors, and major suppliers of materials and equipment.

    b. Site development permit number.

    c. Date and time (arrival and departure) of site visits.

    d. Weather conditions, including temperature.

    e. A description of construction activities and equipment on site.

    f. Statements of directions to change plans, specifications, stop work, reject materials, or other work quality actions.

    g. Public agency contacts which result in plan changes or other significant actions.

    h. Perceived problems and action taken.

    i. Final and staged inspections.

    j. Specific Observations to provide additional detail as in the case of observing testing procedures.

    k. General remarks including citizen contact or complaints.

    l. Information on the Erosion and Sediment Control Best Management Practices and status of applicable inspection reports.

    m. Digital Photo Log of Construction Activities.

4. Site Visit Reporting – The EOR shall submit to the designated City Inspector a Monthly Project Status Report on the progress of construction. The report shall include copies of the Site Visit Reports and a summary of activities that were performed during that month, including but not limited to:

        a. Description of work performed

        b. Identify any construction or design issues.

        c. Document any approved field changes, change orders or design revisions.

d. Updated construction schedule

e. Summary of any public agency contacts

f. Summary of any citizen complaints or contacts.

The City may elect to require more frequent reporting based on the complexity and construction schedule of the project. If the reports become more than two weeks in arrears, or are significantly deficient as determined by the City, a stop work order may be posted on the project site.

5. Site Visits and Observation of Construction – Conduct on-site visits to observe the Contractor's work in progress to determine if the work is proceeding in general conformance with the Contract Documents. Visits to the site shall be conducted as the EOR deems necessary at intervals appropriate to the various stages of construction. The EOR shall coordinate with the designated City Inspector in advance of scheduled inspections, tests, and system start-ups that require City personnel to be in attendance. These required inspections shall be identified at the pre-construction meeting.

6. System Start Ups - Verify that tests, equipment, and systems start-ups, as well as operating and maintenance trainings are conducted with the appropriate City personnel. These requirements shall be identified at the pre-construction meeting.

7. Defective Work Notification – If during the course of construction, the EOR observes any work that is defective and does not meet the requirements of the approved Contract Documents, the EOR shall immediately notify the designated City Inspector to determine if any work shall be corrected, rejected, or should be uncovered for observations, or requires special testing, inspection, or approval of the City Engineer.

8. Clarifications and Interpretations – Issue necessary clarifications and interpretations as initiated by the Contractor in reference to the Contract Documents.

9. Modifications or Change Orders – Provide recommendations of approval or denial to the City Engineer of any project modifications or change orders that directly alter the Contract Documents.

10. Shop Drawings and Material Samples Submittals – Review and approve or recommend another action in respect to Shop Drawings and Material Samples that the Contractor is required to submit by the Contract Documents. The EOR is reviewing only for conformance with the information in the Contract Documents and for compatibility and intent with the proposed approved design. The EOR's approval or other action does not extend to the means, methods, techniques or construction procedures of the Contractor.

    The EOR shall review the following submittals as required but not limited to:

    - Drainage Structures (manholes and inlets) Shop Drawings
    - Work Containment Plans and Systems
    - Bridge Removal Plans
    - Shoring and Falsework Calculations and Drawings
    - Reinforcing Steel Shop Drawings
    - Prefabricated Steel Shop Drawings
    - Prefabricated Concrete Shop Drawings

- Concrete Mix Designs
- Pavement Designs
- Material Submittals and Certifications
- Pile and Driving Equipment submittal
- Bridge Rail and Protective Fencing Shop Drawings
- Retaining Wall Calculations and Drawings
- Drilled Shaft Submittals
- Lighting Pole and Traffic Signal Pole Submittals

11. Substitutes and "or equal" – Review and provide a recommendation to the City Engineer indicating the acceptability of Contractor's request for substitute or "as-equal" materials and equipment.

12. Special Inspections and Tests – Receive and review all certificates of special inspections and test results from an independent testing laboratory as required by the Contract Documents. The Engineer of Record shall be entitled to rely on the results of such tests for the purpose of determining that the certified results indicate compliance with the Contract Documents. The review does not constitute an independent evaluation that the methods for inspections and test results comply with the requirements of the Contract Documents.

13. Standard Documentation - Provide documentation using the most recent version of the City inspection forms to document all work. The EOR may require additional documentation as necessary to meet the needs of the design. The required documentation forms shall be determined at the pre-construction meeting

14. Project Files - Maintain orderly files for project correspondence, Contract Documents, site visit reports, work change directives, clarifications of Contract Documents, shop and sample submittals received from the contractor, and other Project-related documents

15. Final Acceptance Documentation – Coordinate with the Contractor, special inspectors, and independent testing laboratories to receive, compile, and review all required completion documents as required.

16. Substantial Completion – After notification from the Contractor that the project is in substantial completion with the Contract Documents, the EOR shall visit the project to determine if the work is substantially complete and that a Final Acceptance Request can be submitted to the City Engineer. If the work is not substantially complete, then the EOR shall provide an itemized punch list to the Contractor and the City Inspector that must be remedied prior to submitting the Final Acceptance Request to the City.

17. Final Acceptance Request – Upon receipt of the Final Acceptance Request from the EOR, the City Inspector shall schedule a final site visit to the project to determine if the completed work of the contractor is acceptable and can recommend in writing to the City Engineer that the work can be accepted by the City.

2.4 Role of the Resident Project Representative

The EOR may elect to provide a qualified RPR to assist the EOR in the progress and quality of the Contractor's Work. The RPR shall be designated as the EOR's representative at the project site, and shall act as directed by and under the direct supervision of the EOR. The existence of an RPR shall

not limit, extend, or modify the EOR's responsibilities or authority. The EOR shall verify that the RPR has competent work related experience appropriate for the requirements for each project. RPR's should have the appropriate following ODOT Inspector Certifications or equivalent and relevant experience:

- Certified Bridge Construction Inspector (CBCI)
- Certified Environmental Construction Inspector (CECI)
- Certified Traffic Signal Inspector (CTSI)
- Certified General Inspector (CGI)
- Certified Hot Mixed Asphalt Concrete Inspector (HMAC)Certified Drilled Shaft Inspector (CDSI)

If a RPR is utilized by the EOR, the City reserves the right to require replacement of the RPR if it is determined that the RPR is not qualified or has the required competency to perform the work required by the City.

2.5 Limitations of the Engineer of Record and Resident Project Representative

Observations and site visits conducted by the EOR and RPR are not required to be exhaustive or to extend to every aspect of the Contractor's Work, but rather may be limited to periodic verifications, select sampling, and similar methods of general observation of the Contractor's Work based on the EOR's exercise of professional judgment. The purpose of the EOR's visits, and representation by the RPR, if any, is intended to enable the EOR to provide the City with a greater degree of confidence that the completed public improvements will conform in general to the requirements of the Contract Documents. Based on the information obtained during site visits, the EOR shall determine, in general, if the Contractor's Work is proceeding in accordance with the Contract Documents. The EOR shall be required to keep the City informed of the progress work through the submittal of the required Site Visit Reports.

The EOR and RPR shall not be responsible to have control over the Contractor's work or have authority of the Contractor's means, methods, techniques, sequences or procedures of construction. In addition, the Contractor shall be responsible for all safety and security of the project site and shall be solely responsible to ensure compliance with all laws and regulations applicable to the Contractor's work. The EOR's inspection is not to guarantee of the performance of any Contractor nor responsible for the Contractor's failure to furnish or correctly perform the work in accordance with the Contract Documents.

2.6 Pre-Construction Meeting

A pre-construction meeting shall be held following construction drawing approval and prior to 'Notice to Proceed' for construction. Before the meeting can be held, all necessary agreements must be signed, City of Bend easements must be recorded, and all final payments must be received. Items to be discussed/supplied are:

1. The Work: Construction documents, agreements, bonds, public facilities improvement agreement, and right of way permit.

2. Contractor's work schedule.

3. City Inspector assignment.
4. Traffic Control Plan/Public Notification.
5. Sub-Contractors and suppliers, including testing laboratories/engineering firms.
6. EOR approved material submittals proposed to be furnished (that is, type, brand, etc., trench backfill-sieve/proctor.)
7. Public safety requirements.
8. Any work requiring inspection outside normal work hours shall require prior coordination and advance payment of an hourly rate as established in the most recent City of Bend fee resolution.
9. Standard requirements for working in the City of Bend right of way.
10. Change/substitution request procedures.

No work shall be performed until a pre-construction meeting has been held with the City. At the pre-construction meeting, a City Inspector shall be assigned to the project and **all** communications, changes, and field decisions shall be coordinated through this inspector.

Progress Meetings

The City Inspector is not expected to participate in any progress meetings held by the Developer and Contractor.

Post-Construction Review

A post-construction meeting may be requested by the City Engineer, Developer, or the Contractor.

Meetings Required by the Supplemental Specifications

When required by Contract Documents, the City Inspector shall be permitted to participate in these meetings.

Public improvements may fall within the jurisdiction of several governmental agencies; for example, Deschutes County, ODOT, etc. When multiple jurisdictions are involved, the Developer, Contractor, and/or Engineer of Record, shall coordinate with and obtain all necessary approvals. The Contractor shall verify all approvals before starting work. The City may stop work on any project that lacks a necessary approval.

The Developer, EOR, and Contractor shall copy the City on all written correspondence with authorizing agencies.

2.7 Changes to Approved Plans or Character of Work

The EOR must notify the City Inspector of changes from the approved Contract Documents. Changes to the approved documents require approval of the City Engineer. The designated City Inspector may approve a minor change (as determined by the City Inspector) and require that the change is properly documented on the Record Drawings. Significant changes as determined by the City Engineer shall require the Developer to submit a plan revision in conformance with this document indicating the proposed changes and an explanation providing the issue and need for the design alteration. The revision shall be reviewed and construction of any changes may not proceed without City Approval. The EOR and RPR do not have authority to approve field changes.

2.7.1 Plan Revisions

Revisions to the Contract Documents are defined as all changes made between the dates the project plans are approved by the City and the date the Record Drawings are accepted as complete by the City.

The particular area of the drawing where a major revision has been made shall be clouded, and the appropriate revision number placed in a triangle shall be shown in that location. The clouded area shall not be shaded or in any form of grey tones.

Revisions shall be listed in the title block of the drawing and shall show:

1. The revision number in a triangle (revisions shall be consecutively numbered on each drawing beginning with number one).
2. Note: A particular set of revisions which may affect several drawings will not necessarily be identified with the same revision number, depending on the number of prior revisions made to each particular drawing.
3. The date the revision was made on the drawing.
4. Note: A particular set of revisions which may affect several drawings shall be assigned the same date even though the actual work involved may take several days to complete.
5. The initials of the person making the revision.

2.8 Modification Criteria

The City Engineer may make project-specific modifications and amendments to an existing standard or specification as authorized by the City Standards based on the following criteria:

1. The standard is inapplicable to a particular situation.
2. Topography, right-of-way, or other geographical conditions or impediments impose an undue economic hardship on the applicant, and an equivalent alternative that can accomplish the same design objective is available and does not compromise public safety, increase short/long term maintenance or cause future increased costs of accessibility.
3. A change to a standard is required to address a specific design or construction problem, and if not modified, the standard will impose an undue hardship on the applicant with little or no material benefit to the public.

2.9 Site Visits and Construction Observation

2.9.1 General

For private development projects, construction of all public improvements shall be observed by the EOR or a qualified RPR under the direct supervision of the EOR. The City will not authorize work to begin on public improvement without designation of the EOR and RPR, if applicable, at the City's

mandatory pre- construction conference. All inspection costs, including required testing, shall be paid by the owner or developer.
The City's policies on inspection services for infrastructure improvements are as follows:

1. **City Inspection Services:** The City will provide only "spot check" inspection services. These services do not relieve the Developer, Engineer of Record, or Contractor of responsibility for proper construction and compliance with the Contract Documents and these Standards and Specifications, nor do City inspection services constitute approval of any modification to the approved construction plans.
2. **Engineer of Record Services:** The EOR and RPR services are the primary construction observation services on a project. These site visits shall be more comprehensive and extensive than City inspection services, and are the responsibility of the owner, developer, and Engineer of Record.

2.9.2 Limitations of City Inspection Services:

The City Inspectors may make site visits to observe the progress of work and provide project coordination. These services do not relieve the Contractor of the responsibility for proper construction and compliance with the requirements of the Contractor Documents, nor do City inspection services constitute approval of any modification to the approved construction plans. The City Inspectors shall provide, but are not limited to, the following services:

1. Acting as a liaison between the designated EOR, RPR, and the City
2. Inspect both work progress and performance testing results.
3. Administrative and coordination activities as required for supporting the processing and completion of the project.
4. Issuing a stop work order to the EOR. If the EOR is not available, the stop work order may be posted.
5. Informing the City Engineer of all proposed plan changes, material changes, stop work orders, or errors or omissions in the approved plans or specifications. Any revision to approved plans must be under the direction of the EOR. The City's inspector has discretion as to whether the revision is significant enough to warrant review by the City Engineer.
6. The City Inspectors shall be notified of all water and sewer connections into active City Lines.

2.9.3 Advance Notification for City Inspection

City inspections will be provided when requested at least 48-hours in advance. The City may at times be able to inspect on shorter notice. Any work performed without a required inspection shall be subject to removal at the City Inspector's discretion.

2.10 Communications

2.10.1 Written Communications

All project communications, required documentation, interpretations, clarifications, and changes to the Contract Documents s will be issued in writing when required by the Contract Documents.

The City Inspector may provide verbal notification to the Contractor, EOR, or RPR at the job site if the work is observed to not conform to the construction documents. The substance of this communication will be included in the City Inspector's regular written reports. The City Inspector will initiate formal, written notice to the Contractor when the work does not meet the requirements of the Contract Documents.

2.11 Record Drawings

The City requires approved record drawings, survey notes and Contractor field installation notes as a condition of final acceptance for all improvement projects.

Failure to maintain accurate record drawings shall be a basis for a stop-work order by the City Engineer.

2.11.1 Record Drawings

Record drawings shall be original single matte film, at least three mil thick, rendered to provide for clear blue line copies and electronic scanned prints. The record drawing shall contain the same data shown on the construction Contractor's field installation notes, symbols and identifiers of data provided by the construction Contractor, and data provided by the EOR.

Record drawings shall include at a minimum:

1. Construction Contractor's name.
2. Engineering firm's name and address.
3. All certifications or professional seals as required by the State of Oregon's regulations and as stated in the foregoing.
4. Numbers for permits issued during design and construction (i.e., ODOT/PF, ROW, Wetlands, Recorded Easements, etc.).
6. A brief description of the any field revisions.
7. Any waivers acquired either during the design or construction on the record drawings.
8. Pertinent information from the Contractor's redline drawings of the facilities as-constructed.
9. Pertinent field installation notes from the line and grade books.
10. Station and elevation of all utilities encountered in the trench.
11. Horizontal and vertical attribute values in accordance with the City Standards and Specifications.

The EOR shall fix any errors in the calculations with the Contractor prior to submittal to the City for approval.

2.11.2 Record Drawing Stamp and Certification Statements

The EOR shall provide the following certification stamp to the Record Drawings. This stamp (in PDF and dwg format) is available from the City Engineer.

RECORD DRAWING CERTIFICATION

I certify that this project has been constructed in substantial compliance with the City approved plans and the City of Bend Public Improvement Construction Procedure Standard and Specifications, dated July 1, 2011. This certification is based on periodic inspections performed by me or by representatives under my direct supervision and information provided by the Construction Contractor and other independent testing and inspection agencies. The information provided by others has been assumed to be correct and has not be verified by the Engineer. This certification indicates that I have reviewed this information and verified that any revision(s) or changes as defined by the record do not appear to be adverse to the planned use and/or intent of the original design.

_____ *(Engineer's Stamp)*

Signature

_____

Date

2.11.3 Survey and Field Installation Notes

A post-construction survey shall be performed to include the items addressed in this section. The post construction survey notes, the construction Contractor's field installation notes, the engineer's daily inspection notes, and the record drawings shall be submitted to the City for review and approval.

Construction surveys shall include at a minimum:

1. Contractor's name and address
2. Line and grade survey notes
3. Surveyor's firm's name and address
4. Construction survey notes

Field installation notes from the Contractor shall contain the horizontal and vertical location information as constructed including, but not limited to:

1. Manholes and cleanouts, horizontal station and vertical elevations;
2. Valves, fire hydrants, key boxes, PRV's and mechanical joint fittings;
3. Make, model and location of all thrust restraint fittings and total footage of pipe restrained;
4. Service connections at the mains and stationing;
5. Special fittings;
6. All encountered utilities, any pipe or street insulation and limits of all fabric material;
7. Changes in pipe size, slope or type; and,
8. Service locations at property lines swing-tied to above-ground facilities, such as fire hydrants, houses, light poles, or water key boxes. For sanitary sewer, give the invert elevation of the connection at the property line or easement line. Buried or Unmarked Appurtenances

Buried or unmarked appurtenances are not justifiable reasons for not submitting Record Drawings. If necessary, the developer or engineer shall uncover or expose the appurtenances and all utilities required for proper records. The Record Drawings should state who provided the record information.

2.11.4 Sanitary Sewer and Water Record Drawings

Record Drawings shall include:

1. Vertical and horizontal location on all tees, bends, valves, restrained piping and fittings, hydrants, manholes, cleanouts, changes in alignment, and ends of pipe. Vertical and horizontal location at minimum intervals of 300 feet on extended runs without alignment change or fittings.
2. Lineal footage of pipe installed, including revisions to stationing and elevations.
3. Vertical and horizontal location on all existing utilities exposed by the trench excavation. Horizontal location may be relative to the line being installed.
4. Horizontal location on new surface features such as valves, hydrants, key boxes, manholes, cleanouts, any repair coupling, etc. This information should be relative to street center lines

and/or property lines. Key boxes and sanitary sewer service connections shall be measured from property corners.

5. Horizontal location or stationing from the nearest feature at any change in pipe material (i.e., transitions to ductile, change in pipe class, etc.).
6. Areas where foundation material is used and/or where bedding material is imported.
7. Water and sewer service connection chart data.
8. Vertical elevation of the service connection at the main and at the property line. Horizontal offset measurement of the service connection to the property line on the plan view.
9. Information on subsurface soil conditions encountered in trenches every 300 feet or where significant changes occur. Particular emphasis shall be placed on native materials at the bottom of the trench. Areas where over-excavation is performed and foundation material is placed shall be delineated.
10. Location and stationing of all pipe abandonment. Include both length of pipe removed and pipe abandoned in place.
11. Horizontal and vertical location of any approved sanitary sewer or water service connection Pig-Tail(s).
12. Location size and type of all cathodic protection devices.
13. Horizontal dimensions of building foot prints.
14. Horizontal dimensions of all easements.

Any changes authorized in the field shall be shown and noted as "field change".

2.12 Final Acceptance and Project Closeout

The EOR shall submit a formal Final Acceptance Request to the City when all required work has been completed. The EOR shall compile and submit the following closeout documentation:

1. A complete set of Record Drawings
2. Contractor's field installation notes of the facilities as-constructed
3. EOR and RPR’s inspection reports,
4. All lab and on-site materials testing reports/results
5. Original construction field survey notes,
6. Drywell Testing Reports and final Grading and Drainage Certification Letter
7. ADA Compliance Documents
8. Final water and sewer testing documents
9. Any other documentation as required by the City.

The City Inspector shall schedule a final project inspection on submission of required complete Project Closeout documentation. The City Inspector shall issue a Final Project Punch List. Once all the punch list items are completed, the City Inspector shall notify the City Engineer when all requirements of the Contract Documents have been completed.

The City Engineer shall then coordinate with the Developer to complete all required final project acceptance and warranty documents. Once all the required documents are completed and the warranty financial guarantees have been accepted by the City, the City Engineer shall issue a Certificate of Substantial Completion that establishes a specific date for the project substantial completion, recommendations for approval for occupancy of the project or final plat signatures, and the initiation of the warranty period as required by Contract Documents.

2.12.1 Warranty Period

The City Engineer and City Inspectors shall monitor the project during the warranty period and schedule a final project inspection with the Owner approximately 30 days before the end of the warranty period. The City Inspector shall issue a Final Warranty Punch List to the Owner if there are any items that need to be corrected. The Owner shall be responsible to repair all punch list items and notify the City Inspector to verify all items have been repaired to the satisfaction of the City. The City Inspector shall notify the City Engineer after all requirements of the warranty period have been successfully completed. The City Engineer shall than issue a Certification of Final Project Acceptance and release the warranty document.

2.12.2 Final Acceptance and Use of System Improvements

The public system improvements shall be available for public use only after Final Acceptance, or by approval with the City Engineer.

Page left intentionally blank

3. Other Considerations

3.1 Contractor Responsibilities

3.1.1 General

Any Contractor or sub-Contractor performing work on City facilities must be pre-approved by the City. The Contractor must meet the City's insurance, bonding and business license requirements.

Any Contractor and sub-Contractor shall employ responsible and qualified personnel to perform the work. If the City Engineer or designee deems any employee or contractor to be unqualified, the unqualified person shall be immediately replaced.

3.1.2 Public Notification

Any impeding or interruptions of existing public services requires 48 hours' prior notice to the public. Each notification shall be the responsibility of the Contractor performing the work and shall be coordinated with the City Inspector. Failure to adequately notify the public may result in an immediate suspension of the Contractor's activities.

Project-specific requirements enacted through PFIA, or other agreements made on Development projects, shall supersede this notification requirement.

3.1.3 City of Bend Fire Department Requirements

3.1.3.1 Fire Safety during Construction

a) Approved Fire Department access roads, water supply, and fire hydrants shall be installed and accepted for operation prior to any combustible construction, unless otherwise approved in writing by the Fire Department.

b) All construction activities shall maintain horizontal and vertical clearance from existing structures during construction to facilitate fire department access (i.e., work in right of way may provide a physical barrier or operational issue preventing fire department and emergency services appropriate access to properties.) Coordinate work sequencing to avoid such conflicts and to provide fire department and emergency services access through construction in the right of way.

3.1.3.2 Obstruction and Protection of Fire Hydrants

a) A 3-foot clear space shall be maintained around the perimeter of fire hydrants at all times.

b) Fire hydrants shall comply with City standards.

3.2 Construction

3.2.1 Work Hours, Trespass, Staging Areas, and Sanitation

Work hours are subject to the following limitations:

1. **Noise:** All construction activities must comply with the noise restrictions of the Bend Municipal Code.

2. **Lane Restrictions:** Unless approved by the City Engineer, arterial roads shall have no lane restrictions from 6:30 am to 9:00 am and from 3:30 pm to 6:30 pm. Collectors and Neighborhood Routes with an Average Daily Traffic of over 1000 trips shall have no lane restrictions from 7:00 am to 8:30 am and from 4:00 pm to 6:00 pm.

3. **Trespass:** The Contractor shall limit work, including any physical disturbance, to the area defined within the boundaries of the easements and right-of-way shown on the approved plans for the project. The Contractor shall be solely responsible for any trespass upon adjacent property including all claims, fines, penalties and other remedies deemed applicable under Federal, State, County, and local laws, rules, ordinances, and regulations.

4. **Staging and Stockpiling Areas:** The Contractor shall be required to obtain all necessary permissions, right-of-way permits, easements, and any other permits associated with equipment and material staging areas. Stockpiling and staging of equipment and materials within the public right of way is not allowed without approval of the City Engineer. These areas may be subject to local regulation and it is the sole responsibility of the Contractor to ensure that such regulations are satisfied. Materials shall be stored in a manner to ensure quality for use. Temporary fencing may be required for security and/or safety concerns.

5. **Sanitation:** The Contractor shall be responsible for providing adequate sanitation facilities (e.g. Portable restrooms, etc.) at the job site for its employees and those of its sub-Contractors. Access to these facilities shall also be made available to City representatives.

6. **Disposal of spoils:** The Contractor shall obtain all necessary land use approvals and disposal or fill permits for the off-site disposal of spoils from the construction site.

3.2.1.1 Safety Requirements

1. The Contractor is responsible for the safety of the work and of all persons and property coming into contact with the work. The Contractor shall conduct his work in such a manner as to comply with all the requirements prescribed by OSHA. Traffic control in work zones shall conform to the MUTCD and the ODOT supplements to the MUTCD. A traffic control plan shall be submitted and approved by the City prior to construction.

2. The City and its agents have no responsibility or liability relating to the safety of the work, or the enforcement of OSHA rules.

3. City may stop work if a serious safety issue is not addressed or corrected.

3.2.1.2 Scheduling

Sequence of operations:

1. The Contractor shall plan construction work and execute his operation with a minimum of interference with the operation of the existing public facilities. It may be necessary for the Contractor to schedule work outside normal working hours in order to avoid undesirable conditions. Work outside of normal working hours will require the approval of the City Engineer or designee. All scheduling is subject to the City's approval and does not relieve the Contractor from making work available for inspection.

2. Connections between existing work and new work shall not be made until the new work is found to conform in all respects to the requirements of the plans and specifications.

Progress of Construction:

Construction shall proceed in a systematic manner that will result in a minimum of inconvenience to the public.

3.2.1.3 Preservation, Restoration, and Cleanup:

1. The Owner, Developer, and Contractor must not disturb the following site features and amenities, unless expressly allowed by the permit or construction documents:
    a. Existing drainage patterns and features;
    b. Existing vegetation, shrubs, trees, and landscaping;
    c. Public property, improvements, operations, and services;
    d. Private property and improvements;
    e. Access to public and private property and the enjoyment of same;
    f. Private utility facilities and services;
    g. Street signing, mail boxes; and,
    h. Other site features and amenities that the construction documents expressly indicate are to be preserved, protected, or maintained.
2. Disturbance of any existing drainage features or drainage features access shall not be left un-restored for more than 8 hours unless an extension is granted by the City.
3. No disruptions of public utility services shall last for more than 4 hours except that private utility services may be restored at the utility providers own convenience. The Contractor shall provide temporary utility services during the period of disruption of utility services that is beyond 4 hours, until the service is fully restored, unless an extension is granted by the utility provider.
4. No disturbance of other amenities shall be left un-restored for more than 12 hours unless more immediate restoration is required by the City or an extension is granted by the City.
5. Ongoing site maintenance and cleanup shall be performed during construction. The Contractor shall keep the premises clean and orderly at all times during the work and leave the project free of rubbish or excess materials of any kind upon completion of the work. During construction, the Contractor shall stockpile excavated materials so as to do the least damage to adjacent lawns, grassed areas, gardens, shrubbery, trees, or fences, regardless of the ownership of these areas.
6. Existing trees to be preserved shall be protected by tree protection fencing. Stockpiling of excavated material or the storage of construction material or equipment, shall not be permitted within the drip line of existing trees to be preserved.
7. All existing storm systems shall be cleaned and flushed, and original drainage capacity restored. Sediment, rock, and other debris shall be collected and disposed of in a manner meeting

DEQ standards. In no case shall debris be flushed down a storm or sanitary sewer for disposal. All damaged water pipes and appurtenances; sanitary sewer, and storm drainage facilities, irrigation and house drainage pipe, drain tiles, sewer lateral, and culverts shall be repaired and restored to City standards.

8. All areas of existing public rights-of-way and easements disturbed by the Contractor's operations shall be restored to their original condition or better as approved by the City Inspector. Areas outside public right-of-way that are disturbed by the Contractor's operations shall be graded and restored to original condition. The Contractor shall obtain a written release from property owners, for any claims of injury or property damage, when property is not restored to its original condition. The Contractor shall submit a copy of the written release to the City prior to final acceptance.

9. Street Cleanup: The Contractor shall clean up all spilled dirt, mud, rock, gravel, and other foreign material deposited by the Contractor's construction operations from all streets and roads at the conclusion of each day's operation, or as directed by the City. Cleaning shall be by grader and/or front-end loader, supplemented by power brushing and hand labor, unless otherwise approved by the City. Washing of streets with a water truck will not be permitted. Sawcut slurry shall be removed from the street and disposed of in an approved manner. The Contractor shall follow the City's erosion control procedures.

10. Dust Prevention: During all phases of work, the Contractor shall take precautions to abate any dust nuisance by cleaning up, sweeping, sprinkling with water, or other means as necessary to accomplish results satisfactory to the City. Dust prevention measures shall be continuous until final acceptance by the City. Obtaining water from a hydrant will require a bulk water permit from the City Water Department

11. Streams and Sensitive Areas: The Contractor shall comply with all provisions of the permits required by the Oregon Department of Environmental Quality (DEQ), Oregon Division of State Lands (DSL) and/or the U.S. Army Corps of Engineers (USACE).

3.2.1.4 Materials

1. All construction material and components used in the construction of public improvements shall be new manufacture, unless otherwise specified by the City. New manufacture materials do not include re-built, reconditioned, or refurbished materials. All new manufactured construction materials or components shall be installed as designed by the manufacturer.

2. No alteration of materials or components shall be made without consent of the City Engineer.

3. Substitution of Products, "Approved Equal" Designation: Whenever a product, manufacturer's name or brand, or a specific item is designated, it shall be understood that the words "or approved equal" follow such designation. Determination of quality in reference to the project design requirement will be made by the City Engineer. A Contractor shall not use an alternative product without prior written approval of the City. A request to designate an alternative product as an "approved equal" shall be processed as if the alternative product were a modification under Section 140 of this manual.

4. All project submittals will be approved by the EOR and provided to the City electronically prior to the Pre-construction meeting. A hard copy of all approved submittals will be kept on site during construction at all times. Substitutions of approved equals will need to be approved with the EOR and the City prior to their use.

3.2.1.5 Environmental Protection during Construction

General Policy and Requirements

It is the policy of the City to require temporary and permanent measures for all construction projects to lessen the adverse effects of construction on the environment:

1. The City may, in addition, require that a construction project be scheduled so as to minimize erosion or other environmental harm.
2. The Contractor shall comply with all necessary City, DEQ, DSL, USACE, and any other applicable requirements and permits.
3. The Contractor shall properly install, operate, and maintain both temporary and permanent measures as provided in this section or in an approved plan, to protect the environment during the term of the project.
4. Nothing in this section shall relieve any person from the obligation to comply with the regulations or permits of any federal, state, or other local authority.

3.2.1.6 Erosion Control

1. Erosion and sediment control design and construction methodologies must meet or exceed the applicable standards of the City and DEQ.
2. The Engineer shall obtain and submit DEQ NPDES permit approvals for the project, if applicable.
3. Measures to prevent erosion at construction sites shall be incorporated into the construction drawings and specifications.
4. Areas for borrow pits and waste disposal shall be in locations with appropriate land use approvals and permits with full consideration of erosion control needs during and after borrow or disposal operations.

3.3 Contractor's Responsibility for Existing Utilities

Maps and information regarding underground utilities should be obtained from the utility owning and operating the utilities. The locations of the utilities are not guaranteed. 48 hours' notice shall be given to all utility operators that may be affected by the construction operation. Should a utility service be interrupted due to the construction operation, the proper authority shall be notified immediately and the utility service should be restored.

The Contractor shall exercise due care in protecting property and shall restore any property disturbed by the construction to as near original condition as possible.

The Contractor shall notify, at least two business days in advance of work, by calling the Oregon Utility Notification Center at 1-800-332-2344 in accordance with State law.

The contractor must be granted permission by the affected agency before exposing any utility. It shall be the Contractor's responsibility to locate and expose all of the existing underground utilities in advance of the trenching operation in accordance with State law (i.e. Potholing).

It shall be the Contractor's responsibility to protect all utilities and appurtenances above and below the ground from damage. The Contractor shall provide sufficient notice in advance of construction operations to permit the necessary arrangements with the affected utility company for protection or relocation of the interfering utility. The Contractor shall be solely and directly responsible to the Agency and operators of the utilities for any issues or claims arising out of the work done under the contract.

The Contractor shall promptly notify the apparent owner of the utility in the event of interruption to any utility service as a result of being exposed, unsupported, or accidental breakage. Contractor shall cooperate with the authority in restoration of service as promptly as possible and shall bear all costs of repair.

The City is not responsible to the Contractor for damages as a result of inaccuracies in the location or existence of the underground utilities.

3.4 Field Relocation

Minor relocations of the work shall be made only by direction or approval of the City Engineer or City Engineer's representative.

3.5 Blasting

When the Development project involves blasting, Contractor shall provide warning to all persons within the blast zone, together with the stationing of Contractor personnel at strategic locations to prevent persons and vehicles unaware of the danger from entering the blasting area.

The following are to be submitted at the Pre-construction Conference prior to performing blasting work. Additional approvals and submittals may be required by other agencies with jurisdiction.

1) Blasting Plan per Standard Specifications Part 00335.

2) Evidence of insurance.

3) Licenses of blasting personnel.

A permit from the Oregon Department of Fish and Wildlife (ODFW) is required for any use of explosives in the cause of removing any obstruction in any waters of this state, in constructing any foundations for dams, bridges or other structures, or in carrying on any trade or business.

Bend code requires a notification of all building occupants within 100 feet of the blast site be notified prior to blasting. The OSS requires a minimum of 300 feet (dependent on the amount and type of explosive used) and a minimum of 48 hours-notice prior to blasting. The OSS specification part 00335 will be used in all cases unless otherwise approved by the City Engineer.

4. Enforcement

4.1 General

This Section 4 Enforcement describes the enforcement procedures that will be used to enforce Part V Construction Inspection Requirements. This Chapter is to be applied in conjunction with the Bend Code (http://www.codepublishing.com/OR/bend/), the Bend Development Code and other portions of the Bend Standards and Specifications.

The intent is to clearly outline a process that will lead to the voluntary compliance of the "responsible party" as defined in Bend Code 1.40.005D.

4.1.1 Violation

Each violation will be documented and forwarded to the City Engineer for review. The corrective action process may not always commence with the verbal warning or include every step listed below. The City Engineer, or their designated representative, may immediately issue a stop work order for any work done in violation of any applicable law, regulation, or these Standards and Specifications. Each situation will be evaluated given the nature and seriousness of the violation, the work history, and the onsite conditions. The City may take any or all of the following steps and may vary the order of the steps:

1. Verbal warning (written follow up)
2. Written Warning
3. Stop work and suspension of construction privileges in the City of Bend
4. Civil infraction and penalties under Bend Code Chapter 1.40.

A corrective action plan will be included in each of the first three steps to provide a path towards compliance with the Construction Inspection Requirements, the BSS, approved contract plans and specifications, and all other applicable regulations.

Appendix A

These are the preferred Construction Observation tasks and guide lines for the construction of improvements that will be accepted by the City. The EOR will determine to what extent inspection is necessary to ensure that the improvements are constructed in compliance with the approved Contract Documents. This is not a comprehensive list, and the EOR may need to add additional inspection requirements as prescribed by the approved plans.

The EOR or RPR should complete the following tasks, if relevant to the development:

1. Confirm erosion and sediment control measures have been provided prior to site activities that have potential to cause erosion or sediment movement.
2. Confirm that materials delivered meet requirements of the construction documents. The EOR may conduct field tests of material and request copies of manufacturers' certifications to verify that material at the construction site meets requirements of the construction documents.
3. Confirm that required permits have been obtained.
4. Observe subgrade conditions before work bearing on the subgrade is placed. Compaction testing or proof rolling (as appropriate) may be requested by the EOR or City Inspector.
5. Observe placement of bedding or base materials.
6. Review test results from Contractor-provided testing including: density tests on fill materials, such as bedding, backfill, and road base, and asphaltic concrete paving. Additional density tests will be performed to verify in-place densities. Test procedures for density testing are described in the ODOT *Manual of Field Test Procedures* (MFTP).
7. Observe backfill methods for placement, lifts, and compaction.
8. Confirm measurement for payment on unit price contracts if a City Contract.
9. If a traffic control plan is required, the EOR should provide periodic site visits to observe if the approved traffic plan is implemented.
10. Observe topsoil and landscaping placement as specified.
11. Verify that requirements of the construction documents for irrigation and maintenance of landscaping materials are met during the specified maintenance period.
12. Coordinate transfer of Agency-furnished materials, products, and equipment.
13. Observe project start-up and commissioning activities.
14. Observe and document required testing of equipment.
15. Check grades of buried pipe.
16. Observe final installation of buried structures prior to backfill

For Waterline construction, in coordination with City's inspector, perform the following inspections and record date of each:

1. Observe fire hydrant installation, assuring that the hydrant is braced properly, gravel is placed around drain ports, the fire hydrant branch restraining devices have been installed, the hydrant and isolation valve operate properly, and the valve box is free of debris.
2. Observe operation of valves from fully open to fully closed and verify that debris has not been left within the valve box. Verify that the valve is left in the position required for system operations. Coordinate with the city inspector and fire department for marking of hydrants which are to remain out of service.
3. Check joint type is per specifications and joint assembly practices.
4. Observe pipe restraints and verify that restrained lengths match those shown in the construction documents.
5. Check line and grade to verify straightness of pipe installation before covering. Acceptable pipe deflection and deviations from line and grade are defined by the Standard Specifications.
6. Check for pipe location with respect to easements.
7. Observe bedding procedures and verify that bell holes are provided.
8. Observe hydrostatic pressure test and verify that leakage is within acceptable limits specified by AWWA for the joint type and pipe material.
9. Coordinate with City Inspector and observe flushing and disinfection and verify that chlorinated water is disposed of following state and federal regulations.
10. Obtain from City test results of bacteria test sampling performed by City and verify that written test reports from a certified laboratory demonstrate that the samples passed the testing.
11. Obtain from Contractor test reports from all new backflow preventers.
12. Test control valves, following establishment of proper settings by Contractor.
13. Test meters, pressure gauges, and other instruments for proper operation.
14. Observe pipe has been stored properly, is US made per specifications, is undamaged, and is clean of pests and debris before being placed in the trench.
15. Confirm notifications of residents of temporary shutdowns required to perform the work.

For sanitary sewer pipe systems construction, in coordination with City Inspector, perform the following inspections and record date of each:

1. Gravity sewer pipe
    a. Confirm that the sewer pipe has been stored properly.
    b. Check each piece of pipe for damage upon delivery to project site prior to Contractor commencing excavation for pipe placement.
    c. Check joint type is per specifications and joint assembly practices.

d. Make a line and grade check before covering.

e. Make sure excavation has been provided for projecting bells.

f. Check lateral connections for proper installation.

g. Perform pressure testing as specified.

h. Check for pipe location with respect to easements (if any).

i. City crews will perform television inspection of pipes to confirm condition, no presence of debris, and pipe invert vertical sags and deflection compliance.

j. Review City-performed TV test results with City staff and confirm that deficiencies have been addressed.

2. Pressure sewer pipe and sewer force-mains

    a. Confirm that the sewer pipe has been stored properly.

    b. Check each piece of pipe for damage before lowering into the trench.

    c. Make a line and grade check before covering (minimum cover and location of high points in pressure sewer).

    d. Make sure excavation has been provided for projecting bells.

    e. Check lateral connections, and check valves for proper installation.

    f. Perform pressure testing as specified.

    g. Check pipe pigging facilities (if present), including valves, drains, foundation supports, linings and coatings, and appurtenances.

    h. Check for pipe location with respect to easements (if any).

3. Check manhole installations.

    a. Confirm inverts are formed per construction documents.

    b. Confirm manhole materials (including lining, gaskets, castings, ladders/steps) as required by specifications.

    c. Confirm gasket installation as required.

    d. Confirm manhole exterior coating and exterior joint seals as required (possible for high groundwater areas).

    e. Verify that sample manhole (even if not in public right of way), meets design and construction standards.

4. Observe placement of cut-off walls if part of the design.

5. For flexible pipe (for example, PVC), observe specified mandrel test to verify that deflection of flexible pipe does not exceed limits allowed by the Standard Specifications.

6. If video inspection of the sewer is specified, verify that video of the pipe installation meets requirements.

7. Observe a hydrostatic or low pressure air test on pipe system and manhole as specified. Low pressure air test shall conform to the requirements of Uni-Bell B-6-90, *Recommended Practice for Low Pressure Air Testing of Installed Sewer Pipe*.

8. Equipment - Pump Stations

    a. Verify hydrostatic testing of wet well.

    b. Follow procedures identified in Supplemental Specifications, including Equipment Testing and Facility Startup.

    c. Confirm equipment nameplate data versus approved submittals.

    d. Perform functional and performance testing per equipment specifications.

    e. Obtain copies of sign-offs for all required building permits

    f. Test each unit process (pumps, chemical feed systems, odor control systems, etc.) independently, and then as complete system.

    g. Inspect all hardware to ensure nets, bolts, chains and all other fasteners and hardware are made of the appropriate grade of stainless steel.

    h. Inspect guiderails for proper alignment, installation, and material.

    i. Inspect all components of the facility against approved submittal from Contractor / vendor / supplier.

9. Equipment - Engine Generator and Automatic Transfer Switch

    a. Follow procedures identified in Supplemental Specifications, including Equipment Testing and Facility Start-up.

    b. Confirm equipment nameplate data versus approved submittals.

    c. Perform functional and performance testing per equipment specifications.

    d. Simulate power failure and test system operation.

    e. Test auxiliary power connection and transfer switch with portable generator, as applicable.

For Stormwater construction, in coordination with City's inspector, perform the following inspections and record date of each:

1. Observe erosion controls, sediment controls, and construction site pollution prevention. These items are required by City development code, design standards, and are intended by City standards to be included on the approved construction plans for all CIP and Development projects.
    a. Confirm erosion and sediment control plan (ESCP) is submitted and approved.
    b. Confirm that ESCP has been implemented and that erosion and sediment control protection has been provided for existing drainage facilities.
2. Observe construction of catch basins.
    a. Observe excavation.
    b. Observe placement of rebar.
    c. Observe concrete pours and check mix age, temperature, mix composition and slump to determine compliance with specifications in accordance with ODOT MFTP.
    d. Check pipe wall thickness for compliance with plan.
    e. Check castings for compliance with specifications.
    f. Check for proper protection bars, if required.
    g. Confirm all interior joints are grouted per specifications (lid to base).
3. Observe construction of manhole installations.
    a. Confirm inverts are formed per construction documents.
    b. Confirm manhole materials (including lining, gaskets, castings, ladders/steps, riser ring shims) as required by specifications.
    c. Confirm gasket installation as required.
    d. Confirm manhole exterior coating and exterior joint seals as required (possible for high groundwater areas).
4. Check pipe installation.
    a. Check for proper pipe orientation.
    b. Check for connection of laterals.
    c. Check outlet location and invert from all structures.
    d. If corrugated metal pipe is allowed by the Design Standards, check for proper location of longitudinal laps and circumferential laps.
    e. Check for pipe location with respect to easements.
    f. Confirm manhole interior joints are sealed per specification.

g. Confirm channel inverts are smooth and properly aligned.

h. City crews will perform television inspection of pipes to confirm condition, no presence of debris, and pipe invert vertical sags and deflection compliance.

i. Review City-performed TV test results with City staff and confirm that deficiencies have been addressed.

5. Check treatment facility installation.

    a. Check grading versus plan and site planimetrics to confirm placement as designed (ie, within right-of-way or within established private easements.)

    b. Verify swale or other facility dimensions

    c. Verify swale infiltration, if swales provided

    d. Check plantings, if provided, against specifications.

6. Check underground injection control (drywell).

For street construction, in coordination with City's inspector, perform the following inspections and record date of each:

1. Subgrade and Base

    a. Check that all prior construction requirements are completed; for example, utilities, sewers, water pipe, electrical and communication conduit, curb and gutter work.

    b. Check that manholes and valve boxes are brought to finish grade.

    c. Check that soil foundation preparation and stabilization has been completed per specifications.

    d. Check that density, moisture, and thickness of base and subbase meet specifications.

    e. Check for protection and setting of hubs by the Contractor. Confirm grade stakes are established.

    f. Review requirements and procedures with the Contractor, including sources of base and subbase, soil stabilization method, material tests and approvals, and compaction tests.

    g. Check for soil movement under rollers and hauling equipment to locate soft spots.

    h. Confirm backfilled trenches are sufficiently dry and ready for base and subbase construction.

    i. Sample base and subbase materials and confirm results are satisfactory.

    j. Collect delivery tickets for tonnage payment from certified Weighmaster.

    k. Test for compacted density of subbase and base.

l. Check Contractor's provisions for protecting finished subgrade. Do not permit subgrade to dry out prior to being covered with finished surfacing.

2. Surfaces

    a. Check plans and specifications for pavement type, thickness, method of payment, number of courses, and other project-specific paving requirements.

    b. Check that subgrade meets grade, cross-section, and compaction requirements. Check that subgrade is frost free.

    c. Check that all underground construction is completed.

    d. Check that manholes and valve boxes are marked.

    e. Check that contact surfaces and joints are prepared.

    f. Review procedures and requirements with Contractor.

    g. Check Contractor's preparations, source of paving material, and condition of equipment.

    h. Check for report from Plant Inspector sent with the first loads of materials.

    i. Check that pavement material meets specified requirements.

    j. Observe whether pavement placement and finishing are meeting specifications.

    k. Check that temperatures are correct for rolling. Check that ambient temperatures are warm enough for paving.

    l. Check that cleanup operations are adequate, including removal of all temporary signage.

    m. Check that all detours are properly setup and all signage is in place.

    n. Check that samples taken are representative and in accordance with the specifications.

    o. Refer to the sidewalk checklist below for additional guidelines for inspecting concrete pavement.

3. Sidewalks

    a. Verify that Contractor has notified nearby property occupants and potential users about the work to be performed and established accessible detour routes.

    b. Check to see that the subgrade meets specified requirements.

    c. Check grades for proper slopes to meet city and ADA requirements.

    d. Check that all vault, meter boxes, and pull boxes are set to grade, oriented parallel with curb, and located in appropriate horizontal position per standard details (ie. not in sidewalk, except where allowed).

    e. Check that tree wells are blocked out.

f. Check that blockouts for street lights and traffic signals are in place.

g. Check that concrete meets specified requirements.

h. Check that required reinforcement is installed per specifications.

i. Check edging.

j. Check surface for texture meeting specified requirements.

k. Check application of curing compound if required.

l. Check application of joint sealing compound if required.

m. Check joint sawing operation.

n. Check that work is properly barricaded and protected while the concrete pour cures. Check that concrete is properly blanketed to protect it during freezing weather.

4. Curbs and Gutters

    a. Check that headers are securely staked.

    b. Check that radius of curb returns are per plan.

    c. Check that driveway and ADA ramp depressions are located and marked properly.

    d. Check if keys, dowels, or performed joint filler (PJF) are required for adjoining sidewalk (if required, provide per specifications and standard detail).

    e. Check curb grades.

5. Transit Facilities

    a. Complete inspection for other features as specified (sidewalks, signage)

    b. The EOR will complete US Access Board ADAAG Form 29a: Transportation Facilities -- Bus Stops. This checklist is intended to confirm that design standards have been met in the constructed facility.

PART VI

City of Bend Standard Drawings

CITY OF BEND STANDARD DRAWINGS

TABLE OF CONTENTS

ROADWAY	R
TYPICAL STREET CROSS-SECTIONS	R-1
CLEAR VISION AREA AT INTERSECTIONS	R-2
CONCRETE CURB	R-3
SIDEWALK, SETBACK	R-4A
SIDEWALK, CURB-TIGHT	R-4B
DRIVEWAY APPROACH, SETBACK SIDEWALK (STANDARD)	R-5A
DRIVEWAY APPROACH, SETBACK, PARTIALLY LOWERED (ALT B)	R-5B
DRIVEWAY APPROACH, CURB-TIGHT, FULLOW LOWERED (ALT C)	R-5C
DRIVEWAY APPROACH, CURB-TIGHT, PARTIALLY LOWERED (ALT D)	R-5D
DRIVEWAY APPROACH, CURB-TIGHT, WRAPPING SIDEWALK (ALT E)	R-5E
DRIVEWAY APPROACH, ASPHALT	R-5F
TYPICAL PERPENDICULAR CURB RAMP	R-6A
TYPICAL PARALLEL CURB RAMP	R-6B
CURB RAMP DETAILS	R-6C
STANDARD STREET SIGN SUPPORTS	R-7
REMOVABLE POST & MARKINGS	R-7A
STANDARD STREET NAME SIGNS	R-8
STANDARD STREET SIGN PLACEMENT	R-9
TRENCH IN EXISTING PAVEMENT	R-10
FRANCHISE UTILITY JOINT TRENCH	R-10A
TRENCH IN UNIMPROVED AREAS	R-11
STANDARD PRE-CAST DRYWELL	R-12
DRYWELL W/MANUFACTURED TREATMENT LAYOUT	R-13
CONCRETE PAVERS	R-20
MEDIAN END DETAIL	R-25
LOCAL STREET CURB EXTENSIONS	R-26
ACCESSIBLE PARKING	R-29
FULL CURB EXTENSION	R-31
PAVEMENT MARKINGS	R-40
PAVEMENT MARKINGS	R-41
PAVEMENT MARKINGS	R-42
PAVEMENT MARKINGS - ARROWS	R-43
TURN LANE MARKING LAYOUT	R-44
INTERSECTION BIKE SAFETY	R-44A
INTERSECTION PAVEMENT MARKING LAYOUT	R-45
BIKE LANE MARKINGS	R-46
CROSSWALK MARKINGS	R-47
SINGLE TRACK TRAIL – NATIVE EARTH	R-48
PRIMARY TRAIL – AGGREGATE	R-49
CONNECTOR TRAIL – PAVED	R-50
CONNECTOR TRAIL – AGGREGATE	R-51
PRIMARY TRAIL – PAVED	R-52

SANITARY **S**

PROFILE OF TYPICAL SEWER MAIN INSTALLATION	S-1
GRAVITY SEWER SERVICES	S-2
STANDARD SEWER MANHOLE RING & COVER	S-3A
STANDARD SEWER MANHOLE	S-3B
STANDARD OUTSIDE DROP SEWER MANHOLE	S-4
3"&4" PRESSURE SEWER LINE TERMINATION CLEANOUT	S-5
AIR RELEASE/VAC BREAKER PRESSURE SEWER MH	S-6
MAIN LINE CLEANOUT PRESSURE SEWER	S-7
PRESSURE SEWER AIR RELEASE-TRAFFIC AREA	S-8
PRESSURE SEWER SERVICE- NON TRAFFIC AREA	S-9
INDUSTRIAL AND COMMERCIAL SERVICES SAMPLING MANHOLE	S-15
VACUUM SEWER SERVICE	S-16

WATER **W**

WATER MAIN TYPICAL PROFILE	W-1
RESIDENTIAL WATER SERVICE INSTALLATION	W-4
3/4"-1" RESIDENTIAL METER SERVICE INSTALLATION	W-4A
3/4"-1" RESIDENTIAL METER SERVICE INSTALLATION	W-4B
1" COMMERCIAL METER SERVICE INSTALLATION	W-5
1 1/2" & 2" COMMERCIAL METER SERVICE INSTALLATION	W-5A
3" & 4" COMMERCIAL METER SERVICE INSTALLATION	W-5B
6" & LARGER COMMERCIAL METER INSTALLATION	W-5C
GALV LADDER W/ ALUM EXT STD FOR WATER VAULTS	W-6
TYPICAL HYDRANT	W-7
HYDRANT LOCATION	W-8
SEPARATION OF WATER LINE AND IRRIGATION CULVERTS	W-9
1" & 2" STANDARD AIR RELEASE VALVE – TRAFFIC AREAS	W-10
1" STANDARD AIR RELEASE VALVE	W-10A
2" STANDARD AIR RELEASE VALVE	W-10B
TYPICAL DCVA INSTALLATIONS 2" & SMALLER	W-13
2" & LARGER DOUBLE CHECK VALVE ASSEMBLY	W-13A
FIRE SPRINKLER LINE	W-13B
2 1/2"-10" REDUCED PRESSURE BACKFLOW ASSEMBLY	W-15
1"-2" REDUCED PRESSURE BACKFLOW ASSEMBLY	W-15A
2 1/2"+ REDUCED PRESSURE BACKFLOW ASSEMBLY	W-15B
FIRE GATE	W-21
HYDRANT PERMIT/FILLING TANKER TRUCK	W-22
STANDARD 2" BLOW-OFF ASSEMBLY	W-23
4" BLOW-OFF DETAIL	W-24
STANDARD WATER SAMPLING STATION	W-25
CROSS CONNECTION DETAIL	W-29
VALVE BOX AND OPERATOR EXTENSION ASSEMBLY	W-30

STORMWATER **STRM**

TYPICAL VEGETATED SWALE DETAIL	STRM-1
VEGETATED SWALE AND CHECK DAM DETAIL	STRM-2
TYPICAL SWALE LAYOUT	STRM-3
CHECK DAMS	STRM-4
STORMWATER PLANTER DETAIL	STRM-5
STORMWATER FILTER STRIP	STRM-6
STORMWATER SEDIMENTATION MANHOLE	STRM-7
STORMWATER MANHOLE LID DETAIL	STRM-8
STANDARD CATCH BASIN SPECIAL INLETS	STRM-9
STANDARD PRE-CAST DRYWELL	STRM-10
DRYWELL W/ MANUFACTURED TREATMENT LAYOUT	STRM-11
STANDARD DOUBLE CATCH BASIN	STRM-12
EXISTING CATCH BASIN PAVEMENT RESURFACING	STRM-14
STANDARD CATCH BASIN GRATE	STRM-13

EROSION CONTROL **E**

SEDIMENT FENCE DETAIL	E-1
INLET PROTECTION	E-2
BIO-FILTER BAG INLET PROTECTION	E-2A
FILTER INSERT INLET PROTECTION	E-2B
TREE/VEGETATION PROTECTION FENCING	E-3
EROSION BLANKET – SLOPE INSTALLATION	E-5
EROSION BLANKET – CHANNEL INSTALLATION	E-6
CONCRETE TRUCK WASHOUT	E-7
GRAVEL CONSTRUCTION ENTRANCE	E-8

LANDSCAPING **L**

PLANTING OR TURF BED DRIP LAYOUT	L-1
SPRINKLER HEAD & JOINTS	L-2
IRRIGATION SLEEVE UNDER PAVING	L-3
IRRIGATION - TYPICAL TRENCH	L-4
IRRIGATION FITTINGS	L-5
IRRIGATION REMOTE CONTROL VALVE	L-6
IRRIGATION BLOW OUT	L-7
TERMINATION POINT	L-8
QUICK COUPLING VALVE	L-9
DRIP CONTROL VALVE, FILTER & REGULATOR	L-10
1” COMMERCIAL CONTROL ZONE KIT WITH BASKET FILTER	L-12
AIR RELIEF VALVE IN KIT - AR VALVE KIT	L-13
DRIP IRRIGATION MAINLINE LAYOUT	L-14
POINT SOURCE DRIP EMITTER	L-15
LANDSCAPE DRIPLINE FLUSH POINT POTABLE SYSTEM	L-17
DRIPLINE 2” BELOW GRADE POTABLE SYSTEM	L-19
TREE WELL DETAIL	L-20

CITY OF BEND STANDARD DRAWINGS

Roadway (R)

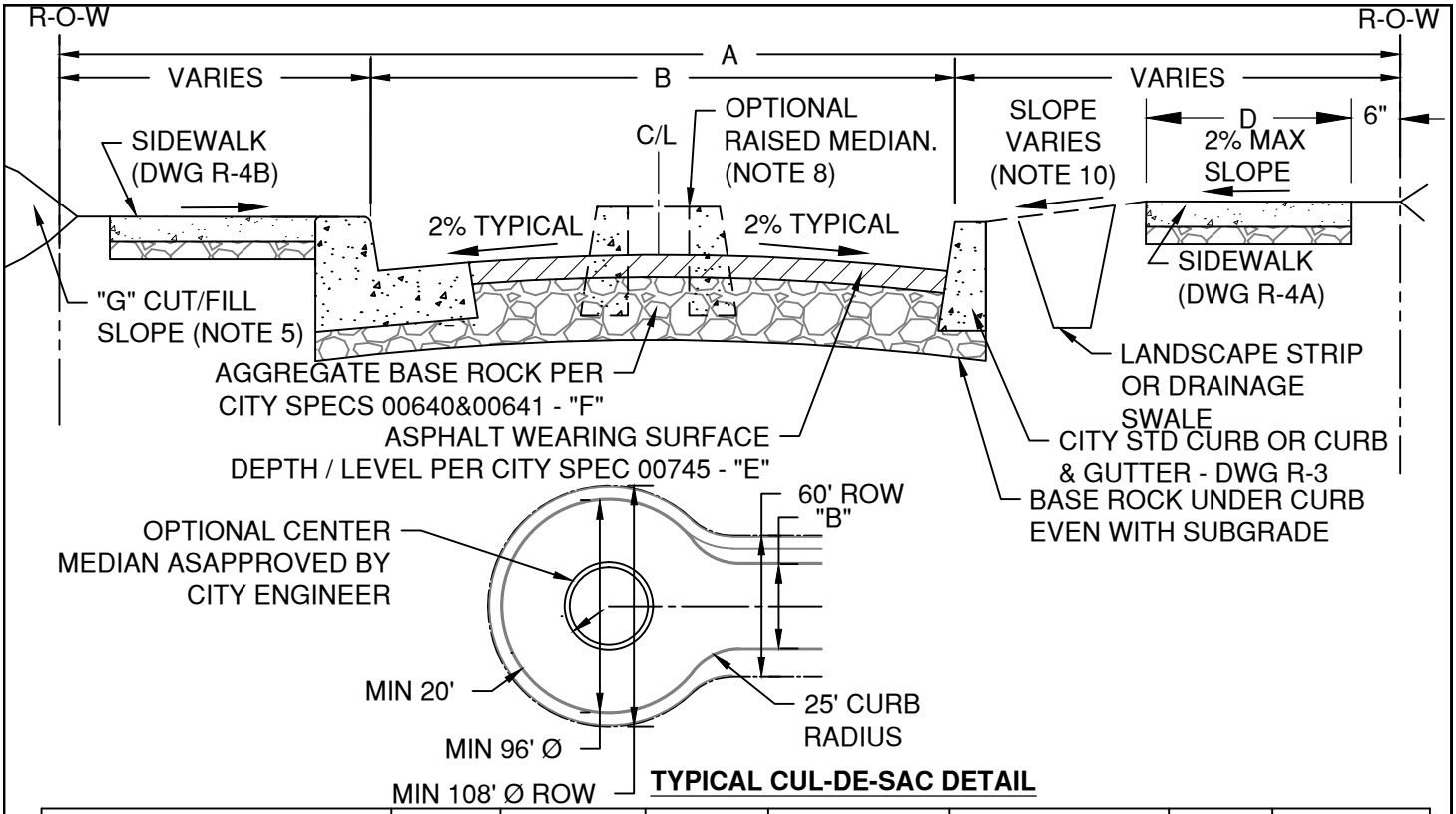

TYPICAL CUL-DE-SAC DETAIL

STREET TYPE	"A" ROW	"B" STREET	"C" CURB	"D" SIDEWALK	"E" AC DEPTH/LEVEL	"F" BASE	"G" CUT/FILL
ARTERIAL	100'	52'-76'	7"/16"	6'	8" - LEVEL IV	10"	4H:1V
COLLECTOR	80'	52'-60'	6"/14"	6'	6" - LEVEL III	8"	4H:1V
LOCAL	60'	24'-36'	6"/12"	5'/6'	4" - LEVEL III	6"	2H:1V
INDUSTRIAL LOCAL	60'	36'-44'	6"/12"	5'	4" - LEVEL III	8"	2H:1V
CUL-DE-SAC	Ø108'	Ø96'	6"/12"**	5'	4" - LEVEL III	6"	2H:1V
ALLEY	20'	20' (note 7)	--	--	4" - LEVEL III	6"	2H:1V

NOTES:

* STREET RESTORATION PER CITY STANDARDS 3.8

1. STREET WILL BE CENTERED IN THE RIGHT OF WAY UNLESS OTHERWISE APPROVED BY CITY ENGINEER.
2. SIDEWALKS SHALL BE INSTALLED PROPERTY TIGHT ON BOTH SIDES OF THE ROAD UNLESS OTHERWISE APPROVED.
3. SIDEWALK GRADE MUST MATCH STREET GRADES WHEN GREATER THAN 5.0%. SIDEWALKS SHALL COMPLY WITH PROWAG GUIDELINES.
4. RETAINING WALLS ARE NOT PERMITTED WITHIN THE ROW UNLESS OTHERWISE APPROVED BY THE CITY ENGINEER.
5. MAX 1.5H:1V CUT SLOPES PERMITTED IN ROCK CUTS WHEN APPROVED BY A GEOTECHNICAL ENGINEER.
6. SUBGRADE FOR STREET AND SIDEWALK SHALL BE COMPACTED TO 95% RELATIVE MAXIMUM DENSITY PER CITY STD 00330
7. NEW ALLEY ROW AND PAVED WIDTH WILL BE 20' WIDE. WHERE ALLEYS ARE INSTALLED IN EXISTING ROW, THE PAVED WIDTH WILL EQUAL THE ROW WIDTH OR UP TO 2 FEET LESS THAN THE ROW WIDTH. 1-FOOT WIDE BUFFERS ON EACH SIDE OF THE ALLEY MAY BE LEFT UNPAVED WHEN ALLEYS ARE INSTALLED IN EXISTING ROW.
8. RAISED MEDIANS ARE AT THE CITY ENGINEER'S DISCRETION ON ARTERIALS & COLLECTORS.
9. IMPROVEMENT STANDARDS ARE BASED ON ZONE AND STREET CLASSIFICATION. REFERENCE THE BEND DEVELOPMENT CODE, SECTION 3.4 PUBLIC IMPROVEMENT STANDARDS FOR ADDITIONAL DETAIL.
10. THE CROSS SECTION OF THE PLANTER STRIP BETWEEN THE CURB AND RIGHT OF WAY SHALL NOT BE STEEPER THAN 4H:1V TO PROVIDE A RECOVERABLE ROADSIDE SLOPE. 2% TYPICAL / PREFERRED.
11. PAVEMENT SECTIONS SHOULD BE PROVIDED PER THE TABLE ON THIS STANDARD, OR AS SPECIFIED IN A STAMPED GEOTECHNICAL REPORT AS APPROVED BY THE CITY ENGINEER.

DRAWN CJH	CITY OF BEND	CITY OF BEND	SCALE NTS
DIV ROADWAY		STANDARD DRAWING	DATE 3/31/19
REV / DATE		710 NW WALL ST., BEND, OREGON 97701	APPR
		TYPICAL STREET CROSS-SECTIONS	STD DWG R-1

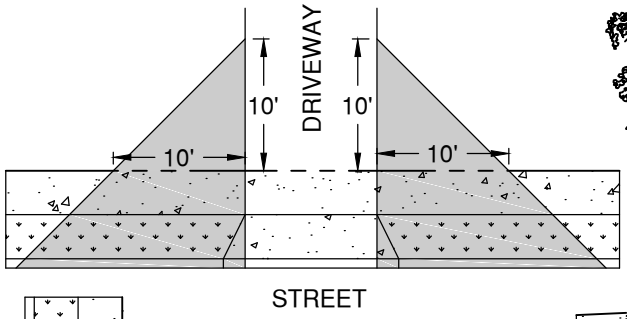

DRIVEWAY AND STREET INTERSECTION (SEE NOTE 5)

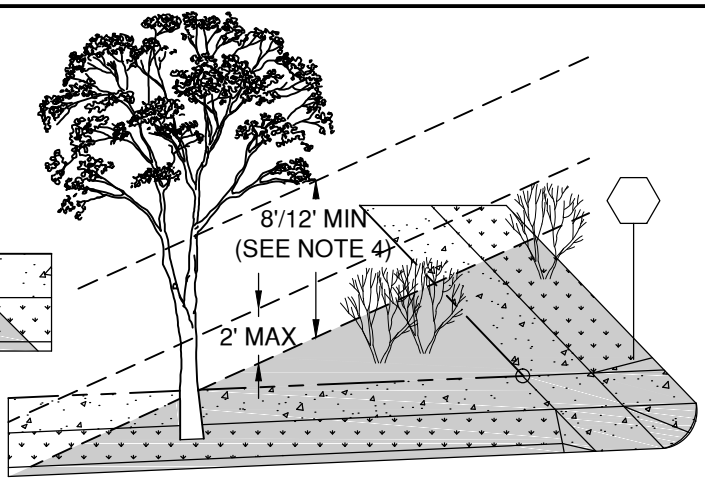

MAX HEIGHT OF SHRUBS AND MINIMUM LIMBING REQUIRED IN CLEAR VISION AREA

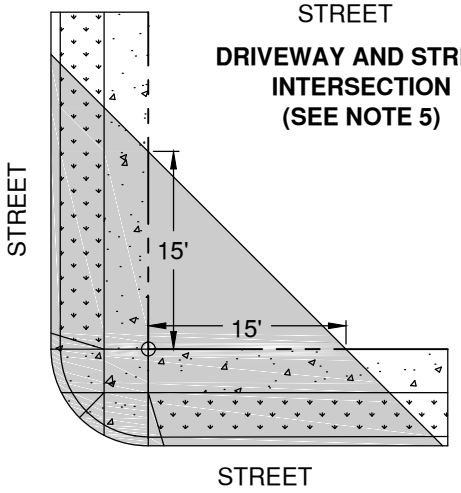

STREET/STREET INTERSECTION

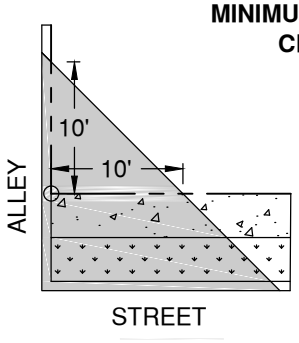

STREET/ALLEY INTERSECTION

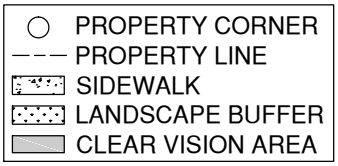

CLEAR VISION AREAS ARE ESTABLISHED AS FOLLOWS:

1) CLEAR VISION TRIANGLES SHALL BE ESTABLISHED AT THE CORNER OF ANY PROPERTY ADJACENT TO INTERSECTIONS OF PUBLIC OR PRIVATE STREETS, ALLEYS, MID-BLOCK LANES, AND/OR RAILROAD RIGHTS-OF-WAY.
2) THE TWO LEGS OF THE CLEAR VISION TRIANGLE ARE EACH MEASURED FROM THE POINT OF INTERSECTION OF THE TWO CORNER LOT LINES, SPECIAL SETBACK LINES, OR ACCESS EASEMENT LINES. WHERE LOT LINES HAVE ROUNDED CORNERS, THE LOT LINES ARE EXTENDED IN A STRAIGHT LINE TO A POINT OF INTERSECTION. THE CLEAR VISION AREA EXTENDS TO THE FACE OF CURB AT THE STREET OR ALLEY
3) THE LENGTH OF BOTH LEGS OF THE CLEAR VISION AREA TRIANGLE IS AS FOLLOWS:

TYPICAL, ALL ZONES:	15 FEET
RAILROADS:	15 FEET
ALLEY INTERSECTION:	10 FEET
DRIVEWAYS:	10 FEET

4) WITHIN THE CLEAR VISION AREA, OBSTRUCTIONS TO VISION OTHER THAN A STREET SIGN, POST, OR POLE LESS THAN 8 INCHES IN DIAMETER SHALL BE CLEARED FROM PROPERTY UNDER THE CONTROL OF THE CITY, HOMEOWNER, OR DEVELOPER. SHRUBS OR FOLIAGE MUST NOT EXCEED 2'-0" IN HEIGHT. PLANTING NEW TREES IS NOT PERMITTED WITHIN THE CLEAR VISION AREA. EXISTING TREES MUST BE PLANTED AND MAINTAINED/LIMBED TO A MINIMUM OF 8'-0" ABOVE THE TOP OF CURB OR 12'-0" ABOVE ADJACENT BIKE LANES.
5) DRIVEWAY APPROACHES AND DRIVEWAYS ARE NOT PERMITTED WITHIN THE CLEAR VISION AREA. ON-STREET PARKING IS NOT PERMITTED WITHIN 20 FEET OF AN ACCESSIBLE RAMP OR WITHIN 10 FEET OF A DRIVEWAY APPROACH.

NOTE: INTERSECTION SIGHT TRIANGLES ARE DISTINCT FROM, AND IN ADDITION TO, CLEAR VISION AREAS. INTERSECTION SIGHT TRIANGLE DIMENSIONS VARY WITH STREET WIDTH, GEOMETRY, TOPOGRAPHY, AND POSTED SPEED; ADDITIONAL CLEARING AS NECESSARY TO PROVIDE CLEAR INTERSECTION SIGHT DISTANCE IS ALSO REQUIRED; SEE CHAPTER 3.3 OF THE CITY OF BEND DESIGN STANDARDS.

DRAWN LJC	CITY OF BEND	CITY OF BEND	SCALE NTS
DIV ROADWAY		STANDARD DRAWING	DATE 12/1/17
REV / DATE		710 NW WALL ST., BEND, OREGON 97701	APPR
2 / 12/1/17		CLEAR VISION AREAS AT INTERSECTIONS	STD DWG R-2

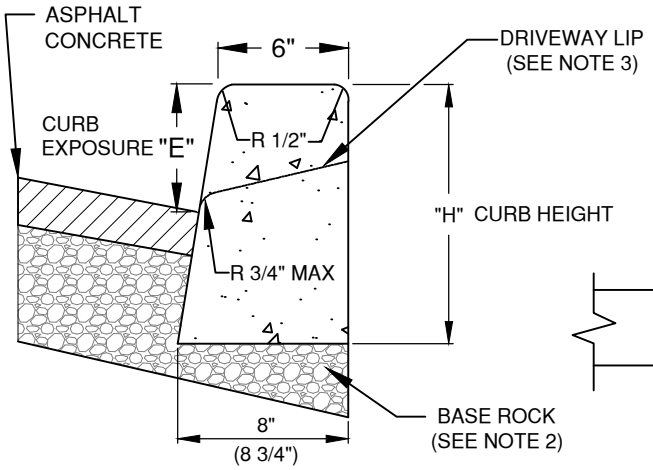

CITY STANDARD CURB

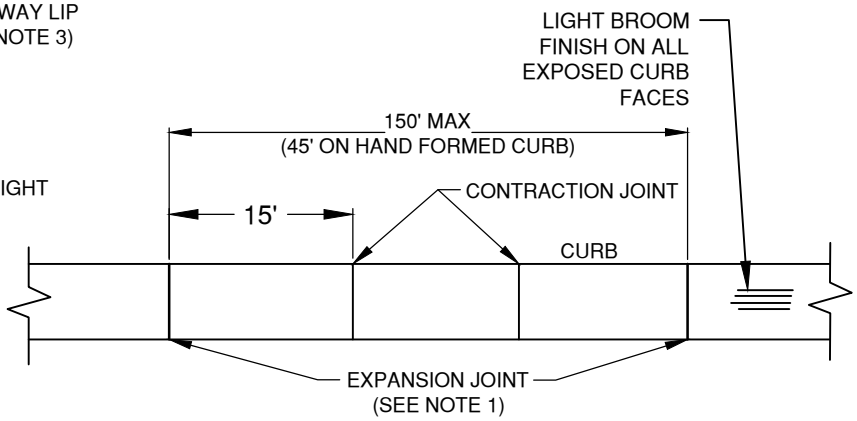

CURB EXPANSION & CONTRACTION JOINTS

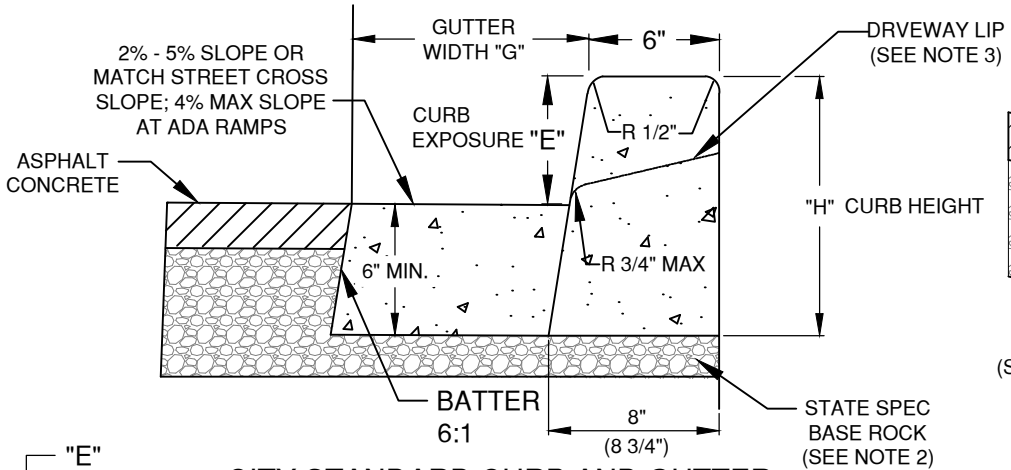

CITY STANDARD CURB AND GUTTER

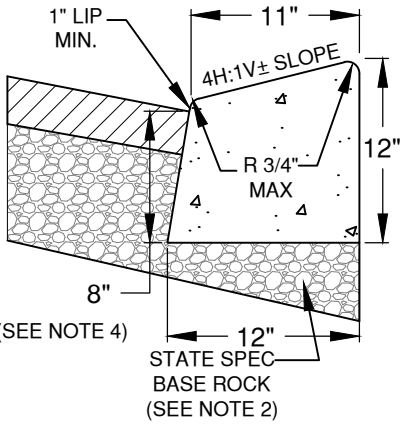

CITY MOUNTABLE CURB

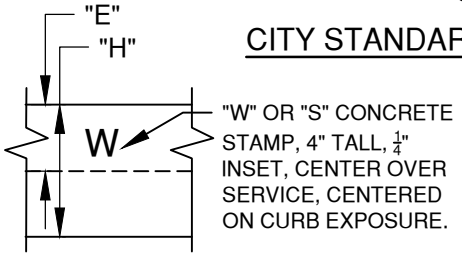

CURB SERVICE STAMP

ROAD CLASS	CURB HEIGHT - H (INCHES)	CURB EXPOSURE - E (INCHES)	GUTTER WIDTH - G (INCHES)
ARTERIAL	16	7	12
COLLECTOR	14	6	18
LOCAL	12	6	18

NOTES:

CONCRETE SHALL BE PER SPECIFICATION SECTION 00440 AND CONTAIN NO ADDITIVES TO CAUSE RAPID SETTING, 4% - 7% AIR ENTRAINMENT REQUIRED.

1. EXPANSION JOINTS REQUIRED AT END OF RADII, DRIVEWAY APRONS, POINTS OF CURVATURE, AND NO GREATER THAN 150' MAXIMUM.
2. STATE SPEC BASE ROCK UNDER CURB AS REQUIRED TO MATCH BOTTOM OF STREET SECTION OR A MINIMUM OF 4" THICK, WHICHEVER IS GREATER. COMPACT PER SPECIFICATION SECTION 00641.44
3. SLOPE DRIVEWAY TOWARD STREET. 3/4" MAXIMUM LIP AT GUTTER, 1" ON COLLECTORS AND ARTERIALS.
4. MOUNTABLE CURB PERMITTED ON LOCAL STREET CUL-DE-SACS, ALLEYS, AND WHERE PERMITTED BY THE CITY ENGINEER. WHERE SIDEWALK ABUTS CURB, SIDEWALK SHALL BE MIN. 6" THICK (DRIVEWAY APRON STANDARDS)
5. CURB AND GUTTER IS REQUIRED WHEN GUTTER SLOPE IS BETWEEN 0.5% - 0.75%.

DRAWN LJC	CITY OF BEND	CITY OF BEND	SCALE NTS
DIV ROADWAY		STANDARD DRAWING	DATE 3/31/19
REV / DATE		710 NW WALL ST., BEND, OREGON 97701	APPR
		CONCRETE CURB	STD DWG R-3

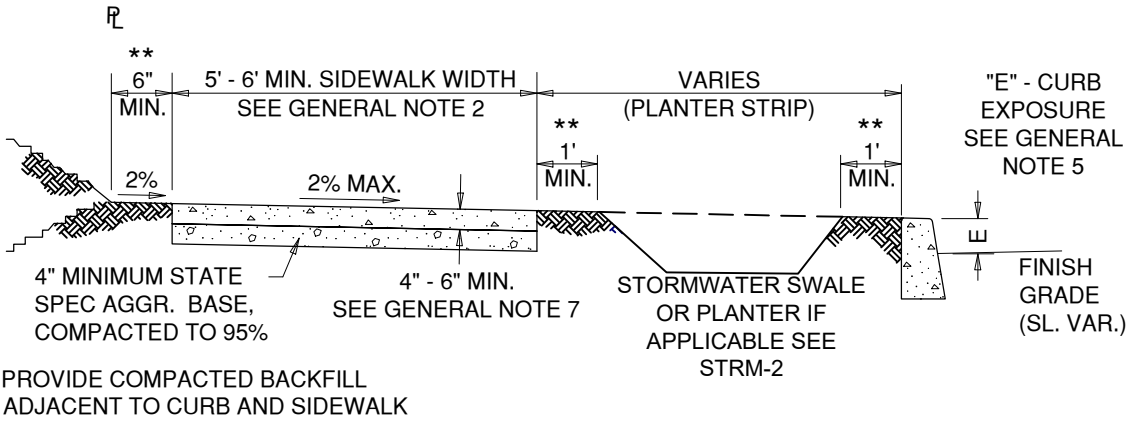

TYPICAL CROSS SECTION

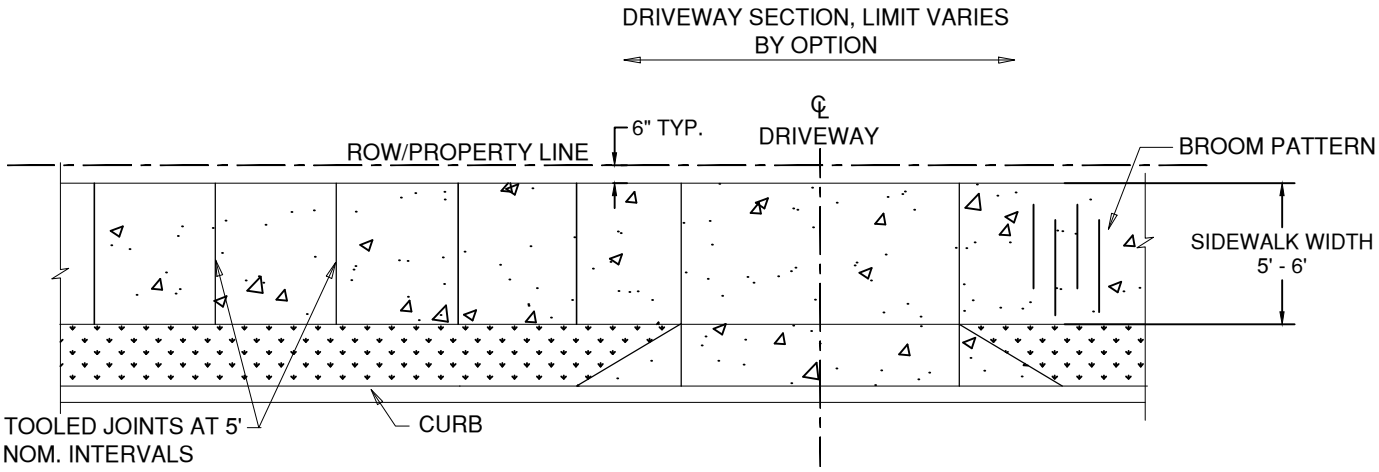

TYPICAL PLAN VIEW

GENERAL NOTES FOR ALL DETAILS:

1. SIDEWALKS SET BACK ADJACENT TO PROPERTY LINE ARE STANDARD. USE CURB-TIGHT SIDEWALKS ONLY WHERE PERMITTED. SIDEWALK SHALL BE PROPERTY-TIGHT EXCEPT TO MEANDER AROUND TREES OR BARRIES (UTILITIES, SIGNS, ETC.) OR WHERE THE BEND DEVELOPMENT CODE ALLOWS HILLSIDE STANDARDS.

2. CURB TYPE AND SIDEWALK WIDTH AS SHOWN ON PLANS OR AS DIRECTED. MAY VARY DEPENDING ON ZONING. SIDEWALK WIDTH: 6' - ARTERIALS & COLLECTORS; 5'/6' - LOCAL STREETS.

3. CONST. EXPANSION JOINTS AT 25' MAXIMUM SPACING, AND AT POINTS OF TANGENCY, AND ON EACH SIDE OF DRIVEWAY APRONS. EXPANSION JOINTS MUST BE FULL DEPTH OF PAVING SECTION.

4. CONST. CONTRACTION JOINTS AT 5' MAXIMUM SPACING, AND AT ENDS OF EACH RAMP.

5. "E" = CURB EXPOSURE. FOR CURB DETAILS, SEE STD. DRG. R-3.

6. FOR DRIVEWAY DETAILS, SEE STD. DRGS. R-5A THROUGH R-5E.

7. SIDEWALK THICKNESS AS SPECIFIED BY PLANS OR AS DIRECTED. MINIMUM 4" THICK OR THICKER, TYPICAL. MINIMUM 6" THICK IF SIDEWALK IS INTENDED AS PORTION OF DRIVEWAY OR IF MOUNTABLE CURB IS USED.

DRAWN LJC		CITY OF BEND		SCALE NTS
DIV ROADWAY		STANDARD DRAWING		DATE 12/1/17
REV	DATE	710 NW WALL ST., BEND, OREGON 97701		APPR
2	12/1/17	CITY OF BEND	SIDEWALK, SETBACK	STD DWG R-4A

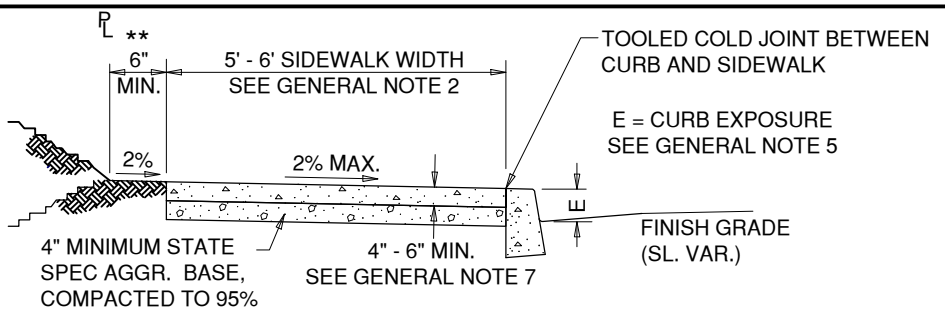

** PROVIDE COMPACTED BACKFILL ADJACENT TO CURB AND SIDEWALK

TYPICAL CROSS SECTION

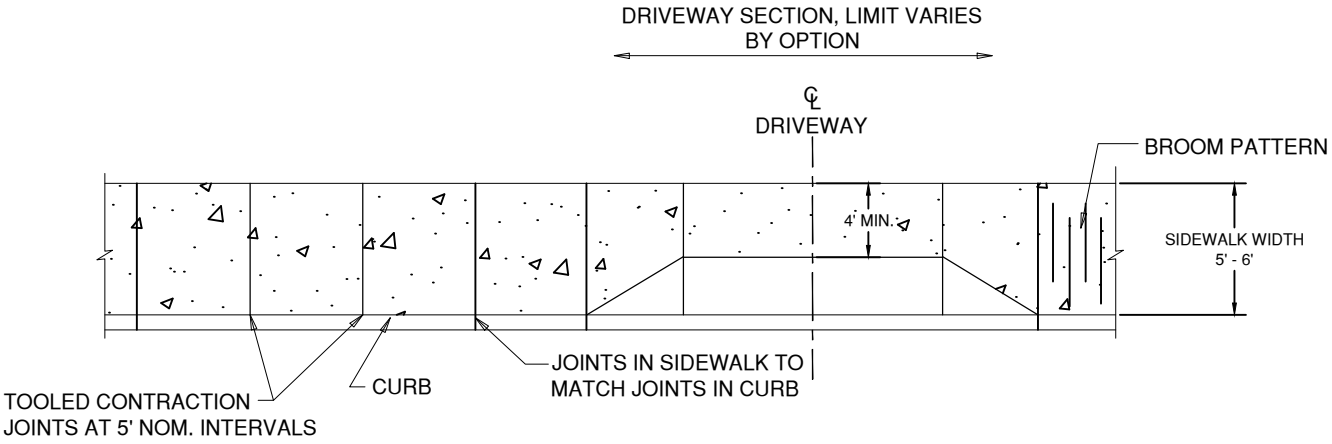

TYPICAL PLAN VIEW

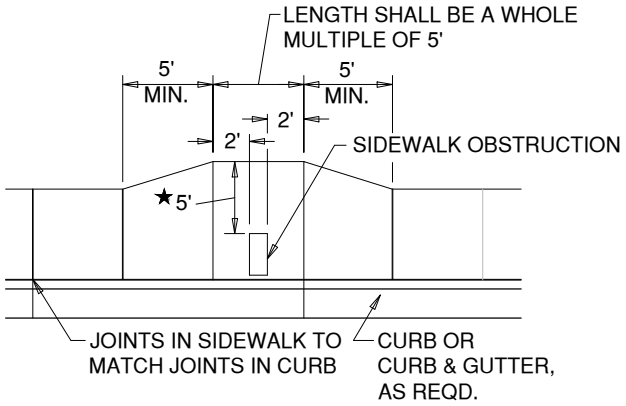

★ WHEN SITE CONSTRAINTS PROHIBIT A 5' PASSAGE, THE ENGINEER MAY DIRECT THIS TO BE REDUCED, BUT NO LESS THAN 4'.

REQUIRED SIDEWALK WIDENING AROUND OBSTRUCTIONS

GENERAL NOTES FOR ALL DETAILS:

1. SIDEWALKS SET BACK ADJACENT TO PROPERTY LINE ARE STANDARD. USE CURB-TIGHT SIDEWALKS ONLY WHERE PERMITTED.
2. CURB TYPE AND SIDEWALK WIDTH AS SHOWN ON PLANS OR AS DIRECTED. MAY VARY DEPENDING ON ZONING.
   SIDEWALK WIDTH: 6' - ARTERIALS & COLLECTORS; 5'/6' - LOCAL STREETS
3. CONST. EXPANSION JOINTS AT 25' MAXIMUM SPACING, AND AT POINTS OF TANGENCY, AND ON EACH SIDE OF DRIVEWAY APRONS. EXPANSION JOINTS MUST BE FULL DEPTH OF PAVING SECTION.
4. CONST. CONTRACTION JOINTS AT 5' MAXIMUM SPACING, AND AT ENDS OF EACH RAMP.
5. "E" = CURB EXPOSURE. FOR CURB DETAILS, SEE STD. DRG. R-3.
6. FOR DRIVEWAY DETAILS, SEE STD. DRGS. R-5A THROUGH R-5E.
7. SIDEWALK THICKNESS AS SPECIFIED BY PLANS OR AS DIRECTED. MINIMUM 4" THICK, TYPICAL. MINIMUM 6" THICK IF SIDEWALK IS INTENDED AS PORTION OF DRIVEWAY OR IF MOUNTABLE CURB IS USED.

DRAWN	LJC
DIV	ROADWAY
REV	DATE
2	12/1/17

CITY OF BEND

CITY OF BEND

STANDARD DRAWING

710 NW WALL ST., BEND, OREGON 97701

SIDEWALK, CURB-TIGHT

SCALE	NTS
DATE	12/1/17
APPR	
STD DWG	R-4B

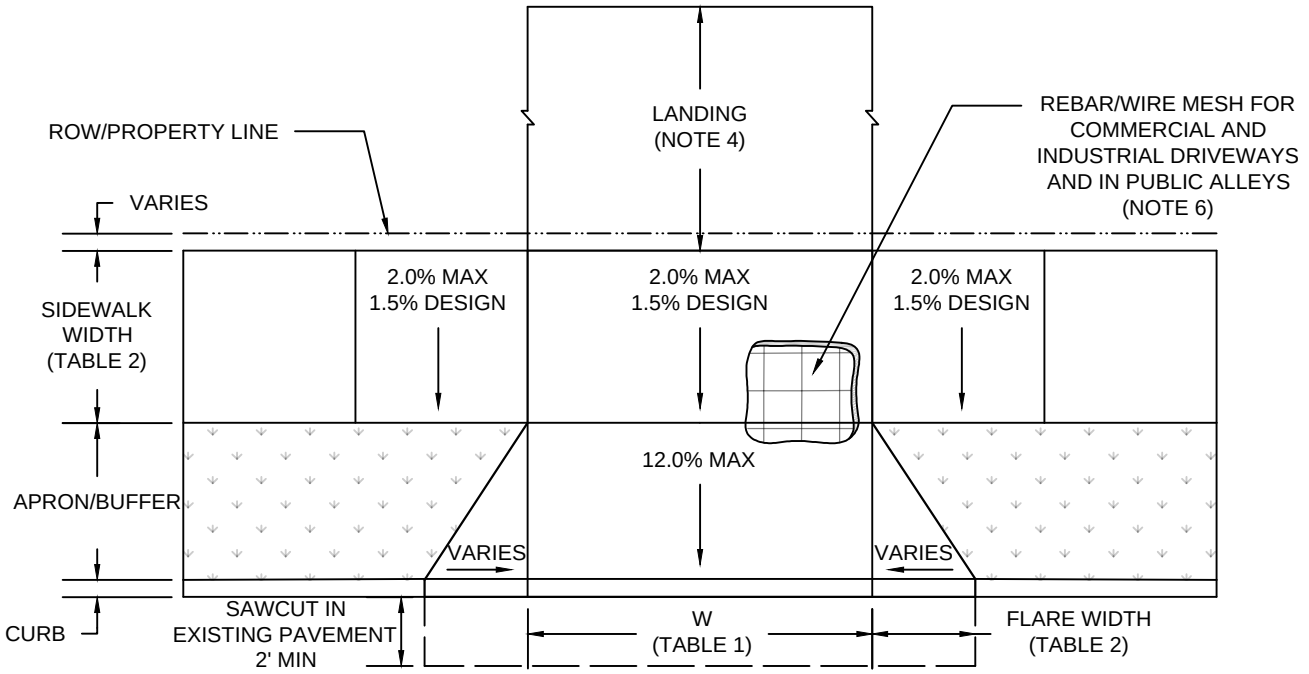

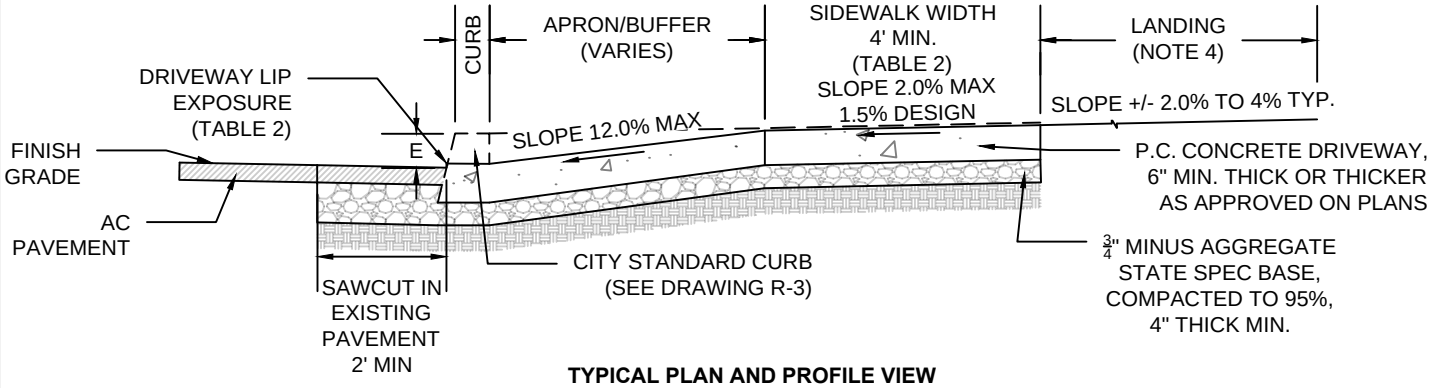

TYPICAL PLAN AND PROFILE VIEW
DRIVEWAY APPROACH, SETBACK SIDEWALK (STANDARD)

TABLE 1 - APPROACH WIDTH (W)	
TYPE	WIDTH
RESIDENTIAL	10' - 24'
MULTIFAMILY	20' - 30'
COMMERCIAL	10' - 35'

TABLE 2 - DRIVEWAY APPROACH WITH SETBACK SIDEWALK SPECIFICATIONS					
TYPE OF STREET	SIDEWALK WIDTH	CURB EXPOSURE "E"	LIP EXPOSURE (MINIMUM)	APRON GRADE, POSITIVE GRADE TO ROW	FLARE WIDTH
LOCAL	5' - 6'	6"	¾"	12.0% MAX	3'
COLLECTOR	6'	7"	1"	12.0% MAX	6'
ARTERIAL	6'	7"	1"	12.0% MAX	6'

GENERAL NOTES:

1. SIDEWALKS SHALL MEET ALL STANDARDS OF CURRENT PUBLIC RIGHTS OF WAY ACCESSIBILITY GUIDELINES (PROWAG).
2. CURB AND SIDEWALK TYPES VARY, SEE PLANS. SEE STD. DRG. R-3 FOR CURB DETAILS. SEE STD. DRGS. R-4A & R-4B FOR SIDEWALK DETAILS.
3. TOOLED JOINTS ARE REQUIRED AT ALL DRIVEWAY SLOPE BREAK LINES.
4. THE LANDING SHALL BE PAVED WITH CONCRETE, ASPHALT, OR OTHER APPROVED SURFACE FOR A MINIMUM OF 20 FEET. PAVING BEYOND THE LANDING SHALL BE IN ACCORDANCE WITH THE BEND DEVELOPMENT CODE. CONSTRUCT AS DIRECTED OR AS SHOWN ON PLANS. DO NOT ENTER PRIVATE PROPERTY WITHOUT APPROPRIATE PERMIT OR EASEMENT. MATERIAL WITHIN THE ROW SHALL BE CONCRETE.
5. CHECK THE GUTTER FLOW DEPTH AT DRIVEWAY LOCATIONS TO ASSURE THAT THE DESIGN FLOOD DOES NOT OVERTOP THE BACK OF SIDEWALK AT DRIVEWAY. IF OVERTOPPING OCCURS PLACE AN INLET AT UPSTREAM SIDE OF DRIVEWAY OR PERFORM OTHER APPROVED DESIGN MITIGATION.
6. #4 REBAR (2'0" ON CENTER, TO BE SUSPENDED TO CENTER OF CONCRETE DEPTH) REQUIRED IN COMMERCIAL AND INDUSTRIAL DRIVEWAYS AND IN PUBLIC ALLEYS. 6"X6" 10 GAUGE MINIMUM WELDED WIRE MAY BE USED IN LIEU OF REBAR.
7. A PUBLIC ACCESS EASEMENT MAY BE REQUIRED IF A PORTION OF THE DRIVEWAY APPROACH ENCROACHES ONTO PRIVATE PROPERTY.
8. CONCRETE DRIVEWAY APRON REQUIRED WHERE SIDEWALK AND/OR CURB IS EXISTING/PROPOSED, OTHERWISE AN ASPHALT APPROACH CAN BE INSTALLED TO EDGE OF PAVEMENT TO SIMILAR WIDTHS OF THE DRIVEWAY APRON AS APPROVED BY THE CITY ENGINEER.

DRAWN LJC	CITY OF BEND	CITY OF BEND STANDARD DRAWING 710 NW WALL ST., BEND, OREGON 97701	SCALE NTS
DIV ROADWAY			DATE 12/1/17
REV / DATE 2 / 12/1/17			APPR
	CITY OF BEND	DRIVEWAY APPROACH, SETBACK (STANDARD)	STD DWG R-5A

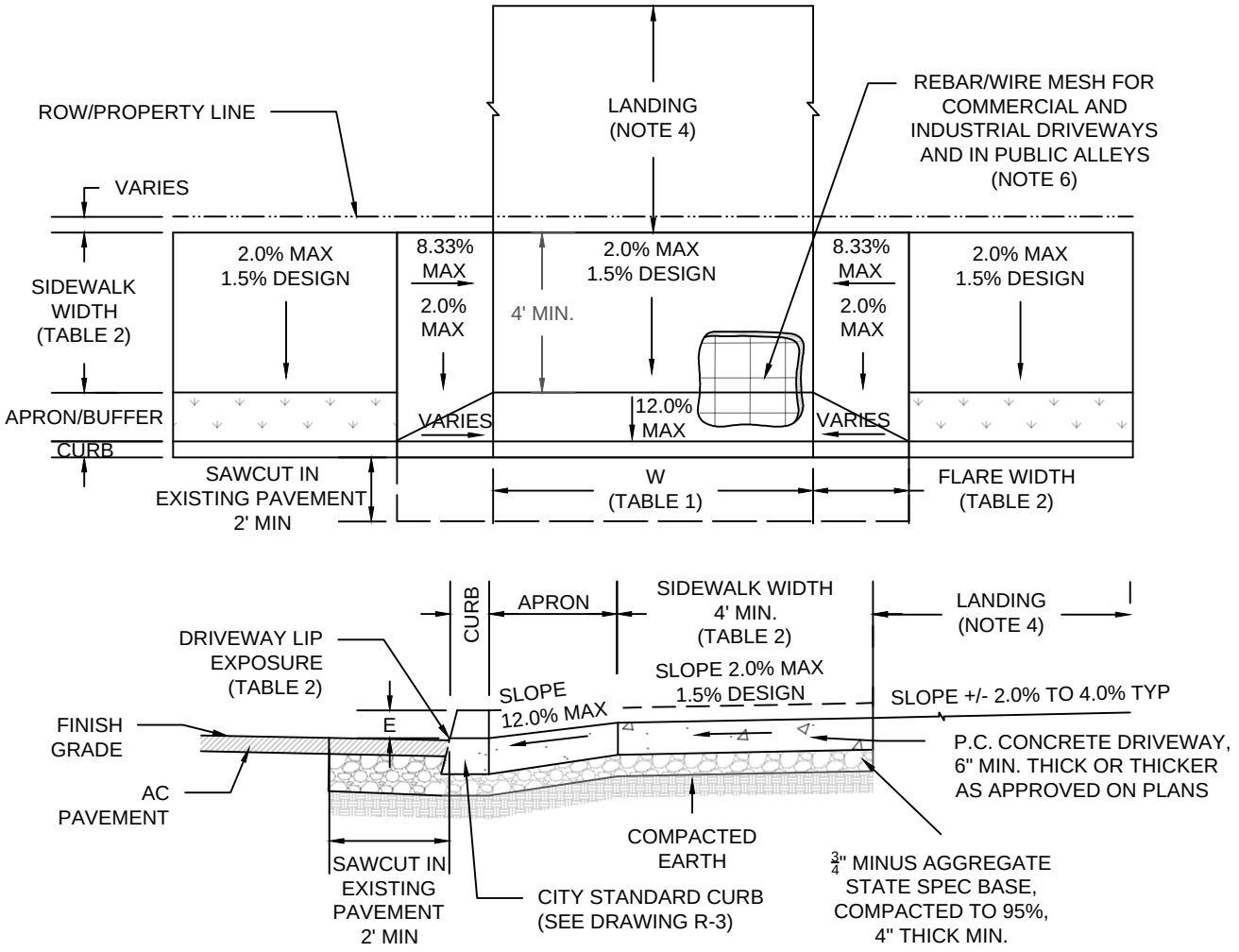

TYPICAL PLAN AND PROFILE VIEW
DRIVEWAY APPROACH, SETBACK, PARTIALLY LOWERED
(ALTERNATE B)

TABLE 1 - APPROACH WIDTH (W)	
TYPE	WIDTH
RESIDENTIAL	10' - 24'
MULTIFAMILY	20' - 30'
COMMERCIAL	10' - 35'

TABLE 2 - DRIVEWAY APPROACH WITH SETBACK, PARTIALLY LOWERED SIDEWALK SPECIFICATIONS					
TYPE OF STREET	SIDEWALK WIDTH	CURB EXPOSURE "E"	LIP EXPOSURE (MINIMUM)	APRON GRADE, POSITIVE GRADE TO ROW	FLARE WIDTH
LOCAL	5' - 6'	6"	¾"	12.0% MAX	3'
COLLECTOR	6'	7"	1"	12.0% MAX	6'
ARTERIAL	6'	7"	1"	12.0% MAX	6'

GENERAL NOTES:
1. SIDEWALKS SHALL MEET ALL STANDARDS OF CURRENT PUBLIC RIGHTS OF WAY ACCESSIBILITY GUIDELINES (PROWAG).
2. CURB AND SIDEWALK TYPES VARY, SEE PLANS. SEE STD. DRG. R-3 FOR CURB DETAILS. SEE STD. DRGS. R-4A & R-4B FOR SIDEWALK DETAILS.
3. TOOLED JOINTS ARE REQUIRED AT ALL DRIVEWAY SLOPE BREAK LINES.
4. THE LANDING SHALL BE PAVED WITH CONCRETE, ASPHALT, OR OTHER APPROVED SURFACE FOR A MINIMUM OF 20 FEET. PAVING BEYOND THE LANDING SHALL BE IN ACCORDANCE WITH THE BEND DEVELOPMENT CODE. CONSTRUCT AS DIRECTED OR AS SHOWN ON PLANS. DO NOT ENTER PRIVATE PROPERTY WITHOUT APPROPRIATE PERMIT OR EASEMENT. MATERIAL WITHIN THE ROW SHALL BE CONCRETE.
5. CHECK THE GUTTER FLOW DEPTH AT DRIVEWAY LOCATIONS TO ASSURE THAT THE DESIGN FLOOD DOES NOT OVERTOP THE BACK OF SIDEWALK AT DRIVEWAY. IF OVERTOPPING OCCURS PLACE AN INLET AT UPSTREAM SIDE OF DRIVEWAY OR PERFORM OTHER APPROVED DESIGN MITIGATION.
6. #4 REBAR (2'0" ON CENTER, TO BE SUSPENDED TO CENTER OF CONCRETE DEPTH) REQUIRED IN COMMERCIAL AND INDUSTRIAL DRIVEWAYS AND IN PUBLIC ALLEYS. 6"X6" 10 GUAGE MINIMUM WELDED WIRE MAY BE USED IN LIEU OF REBAR.
7. A PUBLIC ACCESS EASEMENT MAY BE REQUIRED IF A PORTION OF THE DRIVEWAY APPROACH ENCROACHES ONTO PRIVATE PROPERTY.
8. CONCRETE DRIVEWAY APRON REQUIRED WHERE SIDEWALK AND/OR CURB IS EXISTING/PROPOSED, OTHERWISE AN ASPHALT APPROACH CAN BE INSTALLED TO EDGE OF PAVEMENT TO SIMILAR WIDTHS OF THE DRIVEWAY APRON AS APPROVED BY THE CITY ENGINEER.

DRAWN LJC	CITY OF BEND	CITY OF BEND STANDARD DRAWING 710 NW WALL ST., BEND, OREGON 97701	SCALE NTS
DIV ROADWAY			DATE 12/1/17
REV / DATE 2 / 12/1/17			APPR
	CITY OF BEND	DRIVEWAY APPROACH, SETBACK, PARTIALLY LOWERED (ALTERNATE B)	STD DWG R-5B

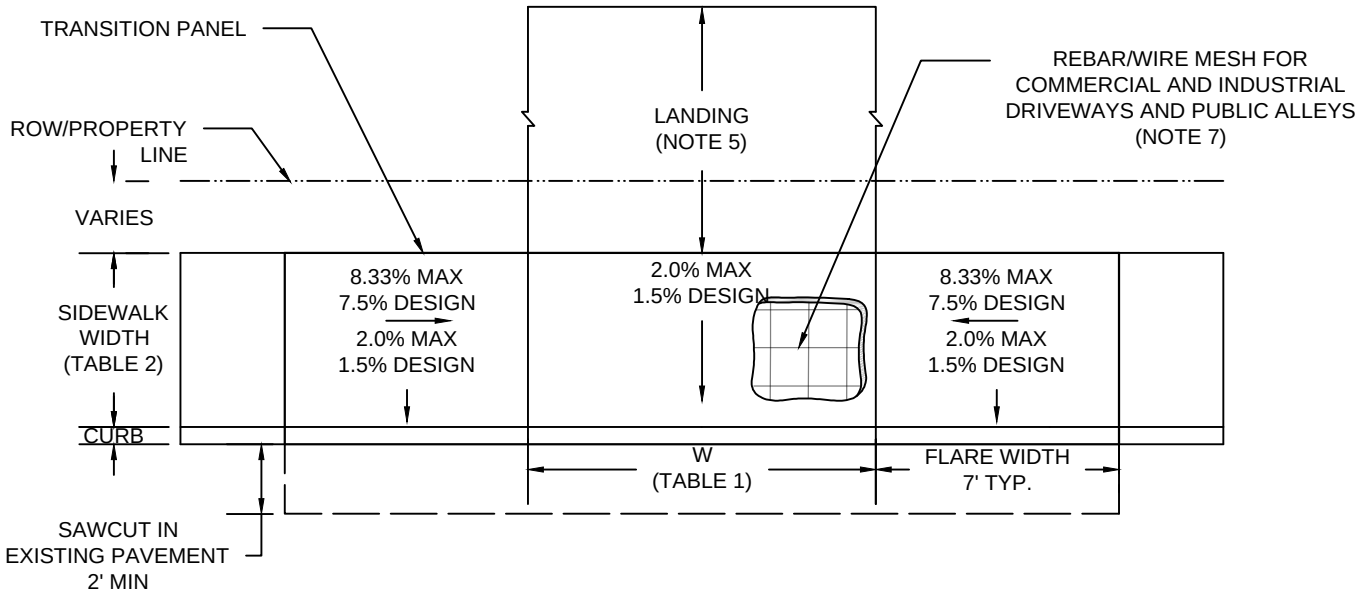

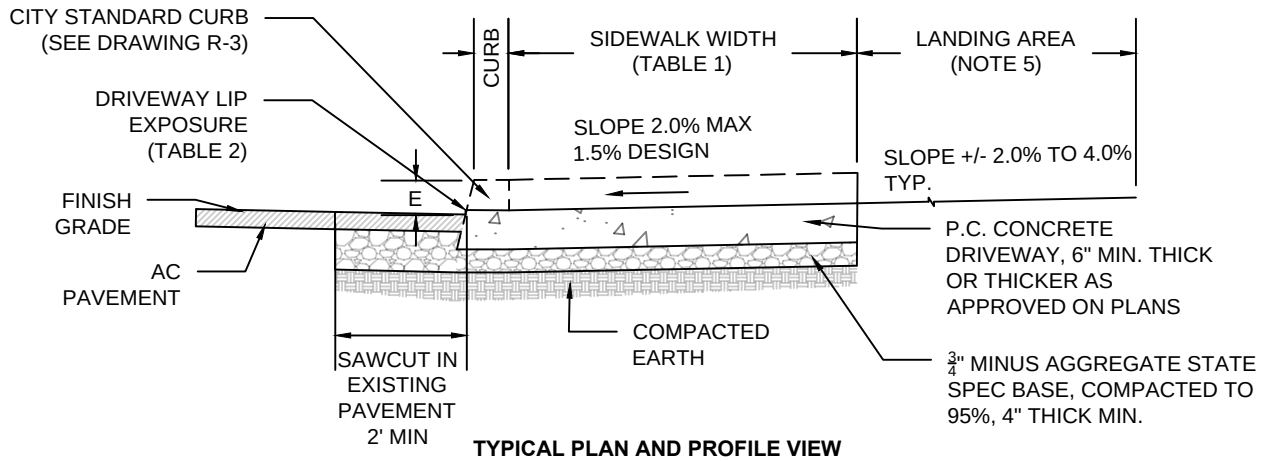

TYPICAL PLAN AND PROFILE VIEW
DRIVEWAY APPROACH, CURB-TIGHT, FULLY LOWERED (ALTERNATE C)

TABLE 1 - APPROACH WIDTH (W)	
TYPE	WIDTH
RESIDENTIAL	10' - 24'
MULTIFAMILY	20' - 30'
COMMERCIAL	10' - 35'

TABLE 2 - DRIVEWAY APPROACH WITH CURB-TIGHT, FULLY LOWERED SIDEWALK SPECIFICATIONS

TYPE OF STREET	SIDEWALK WIDTH	CURB EXPOSURE "E"	LIP EXPOSURE (MINIMUM)	APRON GRADE, POSITIVE GRADE TO ROW	FLARE WIDTH
LOCAL	5' - 6'	6"	¾"	2.0% MAX	7'
COLLECTOR	6'	7"	1"	2.0% MAX	7'
ARTERIAL	6'	7"	1"	2.0% MAX	7'

GENERAL NOTES:
1. SIDEWALKS SHALL MEET ALL STANDARDS OF CURRENT PUBLIC RIGHTS OF WAY ACCESSIBILITY GUIDELINES (PROWAG).
2. SETBACK SIDEWALK DRIVEWAY IS STANDARD. USE FULLY LOWERED CURB-TIGHT SIDEWALK DRIVEWAY AS DIRECTED OR SHOWN ON PLANS.
3. CURB AND SIDEWALK TYPES VARY, SEE PLANS. SEE STD. DRG. R-3 FOR CURB DETAILS. SEE STD. DRGS. R-4A & R-4B FOR SIDEWALK DETAILS.
4. TOOLED JOINTS ARE REQUIRED AT ALL DRIVEWAY SLOPE BREAK LINES.
5. THE LANDING SHALL BE PAVED WITH CONCRETE, ASPHALT, OR OTHER APPROVED SURFACE FOR A MINIMUM OF 20 FEET. PAVING BEYOND THE LANDING SHALL BE IN ACCORDANCE WITH THE BEND DEVELOPMENT CODE. CONSTRUCT AS DIRECTED OR AS SHOWN ON PLANS. DO NOT ENTER PRIVATE PROPERTY WITHOUT APPROPRIATE PERMIT OR EASEMENT. MATERIAL WITHIN THE ROW SHALL BE CONCRETE.
6. CHECK THE GUTTER FLOW DEPTH AT DRIVEWAY LOCATIONS TO ASSURE THAT THE DESIGN FLOOD DOES NOT OVERTOP THE BACK OF SIDEWALK AT DRIVEWAY. IF OVERTOPPING OCCURS PLACE AN INLET AT UPSTREAM SIDE OF DRIVEWAY OR PERFORM OTHER APPROVED DESIGN MITIGATION.
7. #4 REBAR (2'0" ON CENTER, TO BE SUSPENDED TO CENTER OF CONCRETE DEPTH) REQUIRED IN COMMERCIAL AND INDUSTRIAL DRIVEWAYS AND PUBLIC ALLEYS. 6"X6" 10 GAUGE MINIMUM WELDED WIRE MAY BE USED IN LIEU OF REBAR.
8. A PUBLIC ACCESS EASEMENT MAY BE REQUIRED IF A PORTION OF THE DRIVEWAY APPROACH ENCROACHES ONTO PRIVATE PROPERTY.
9. CONCRETE DRIVEWAY APRON REQUIRED WHERE SIDEWALK AND/OR CURB IS EXISTING/PROPOSED, OTHERWISE AN ASPHALT APPROACH CAN BE INSTALLED TO EDGE OF PAVEMENT TO SIMILAR WIDTHS OF THE DRIVEWAY APRON AS APPROVED BY THE CITY ENGINEER.

DRAWN LJC	CITY OF BEND	CITY OF BEND STANDARD DRAWING 710 NW WALL ST., BEND, OREGON 97701	SCALE NTS
DIV ROADWAY			DATE 12/1/17
REV / DATE 2 / 12/1/17			APPR
	CITY OF BEND	DRIVEWAY APPROACH, CURB-TIGHT, FULLY LOWERED (ALTERNATE C)	STD DWG R-5C

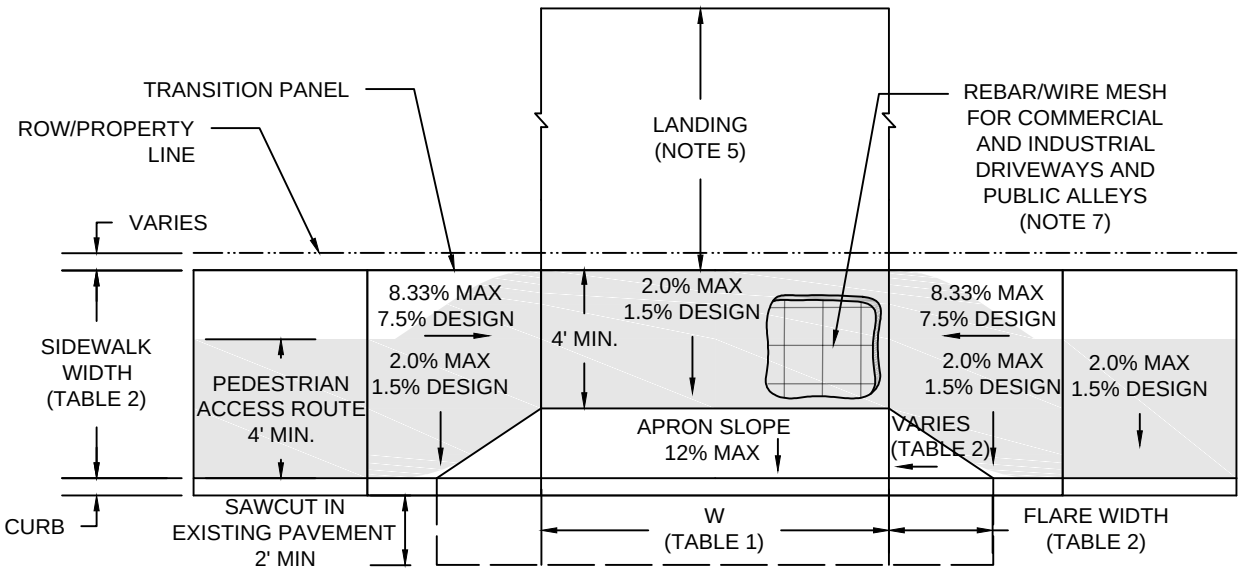

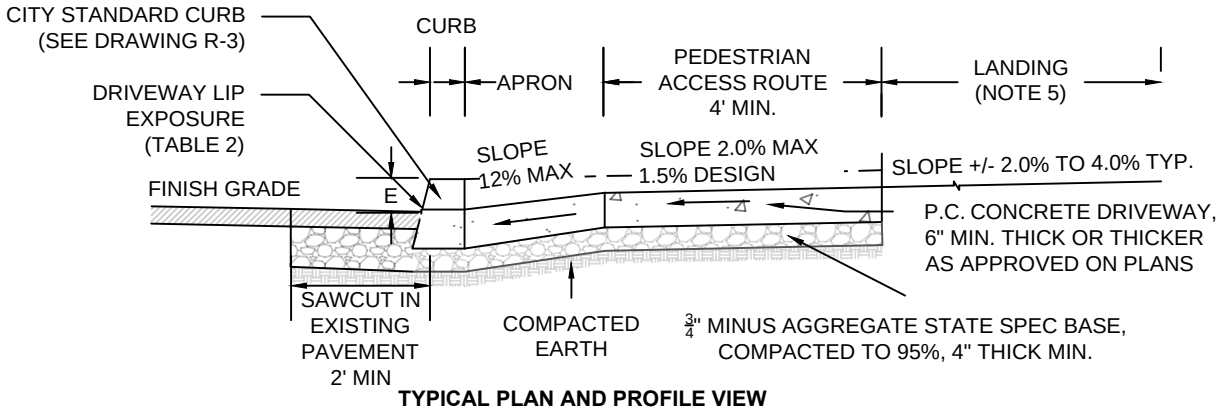

TYPICAL PLAN AND PROFILE VIEW
DRIVEWAY APPROACH, CURB-TIGHT, PARTIALLY LOWERED (ALTERNATE D)

TABLE 1 - APPROACH WIDTH (W)	
TYPE	WIDTH
RESIDENTIAL	10' - 24'
MULTIFAMILY	20' - 30'
COMMERCIAL	10' - 35'

TABLE 2 - DRIVEWAY APPROACH WITH CURB-TIGHT, PARTIALLY LOWERED SIDEWALK SPECIFICATIONS

TYPE OF STREET	SIDEWALK WIDTH	CURB EXPOSURE "E"	LIP EXPOSURE (MINIMUM)	APRON GRADE, POSITIVE GRADE TO ROW	FLARE WIDTH
LOCAL	5' - 6'	6"	¾"	12.0% MAX	3'
COLLECTOR	6'	7"	1"	12.0% MAX	6'
ARTERIAL	6'	7"	1"	12.0% MAX	6'

GENERAL NOTES:
1. SIDEWALKS SHALL MEET ALL STANDARDS OF CURRENT PUBLIC RIGHTS OF WAY ACCESSIBILITY GUIDELINES (PROWAG).
2. SETBACK SIDEWALK DRIVEWAY IS STANDARD. USE PARTIALLY LOWERED CURB-TIGHT SIDEWALK DRIVEWAY AS DIRECTED OR SHOWN ON PLANS. ALTERNATE D REQUIRES 2 FEET MINIMUM FOR THE APRON.
3. CURB AND SIDEWALK TYPES VARY, SEE PLANS. SEE STD. DRG. R-3 FOR CURB DETAILS. SEE STD. DRGS. R-4A & R-4B FOR SIDEWALK DETAILS.
4. TOOLED JOINTS ARE REQUIRED AT ALL DRIVEWAY SLOPE BREAK LINES.
5. THE LANDING SHALL BE PAVED WITH CONCRETE, ASPHALT, OR OTHER APPROVED SURFACE FOR A MINIMUM OF 20 FEET. PAVING BEYOND THE LANDING SHALL BE IN ACCORDANCE WITH THE BEND DEVELOPMENT CODE. CONSTRUCT AS DIRECTED OR AS SHOWN ON PLANS. DO NOT ENTER PRIVATE PROPERTY WITHOUT APPROPRIATE PERMIT OR EASEMENT. MATERIAL WITHIN THE ROW SHALL BE CONCRETE.
6. CHECK THE GUTTER FLOW DEPTH AT DRIVEWAY LOCATIONS TO ASSURE THAT THE DESIGN FLOOD DOES NOT OVERTOP THE BACK OF SIDEWALK AT DRIVEWAY. IF OVERTOPPING OCCURS PLACE AN INLET AT UPSTREAM SIDE OF DRIVEWAY OR PERFORM OTHER APPROVED DESIGN MITIGATION.
7. #4 REBAR (2'0" ON CENTER, TO BE SUSPENDED TO CENTER OF CONCRETE DEPTH) REQUIRED IN COMMERCIAL AND INDUSTRIAL DRIVEWAYS AND PUBLIC ALLEYS. 6"X6" 10 GAUGE MINIMUM WELDED WIRE MAY BE USED IN LIEU OF REBAR.
8. A PUBLIC ACCESS EASEMENT MAY BE REQUIRED IF A PORTION OF THE DRIVEWAY APPROACH ENCROACHES ONTO PRIVATE PROPERTY.
9. CONCRETE DRIVEWAY APRON REQUIRED WHERE SIDEWALK AND/OR CURB IS EXISTING/PROPOSED, OTHERWISE AN ASPHALT APPROACH CAN BE INSTALLED TO EDGE OF PAVEMENT TO SIMILAR WIDTHS OF THE DRIVEWAY APRON AS APPROVED BY THE CITY ENGINEER.

DRAWN LJC	CITY OF BEND	CITY OF BEND STANDARD DRAWING 710 NW WALL ST., BEND, OREGON 97701	SCALE NTS
DIV ROADWAY			DATE 12/1/17
REV / DATE 2 / 12/1/17			APPR
	CITY OF BEND	DRIVEWAY APPROACH, CURB-TIGHT, PARTIALLY LOWERED (ALTERNATE D)	STD DWG R-5D

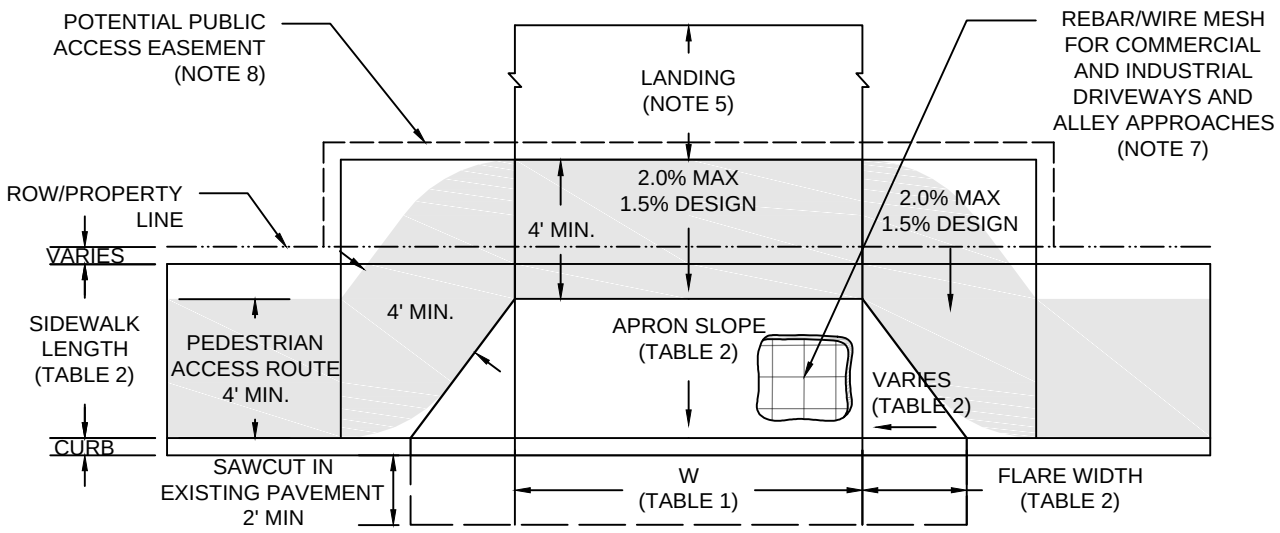

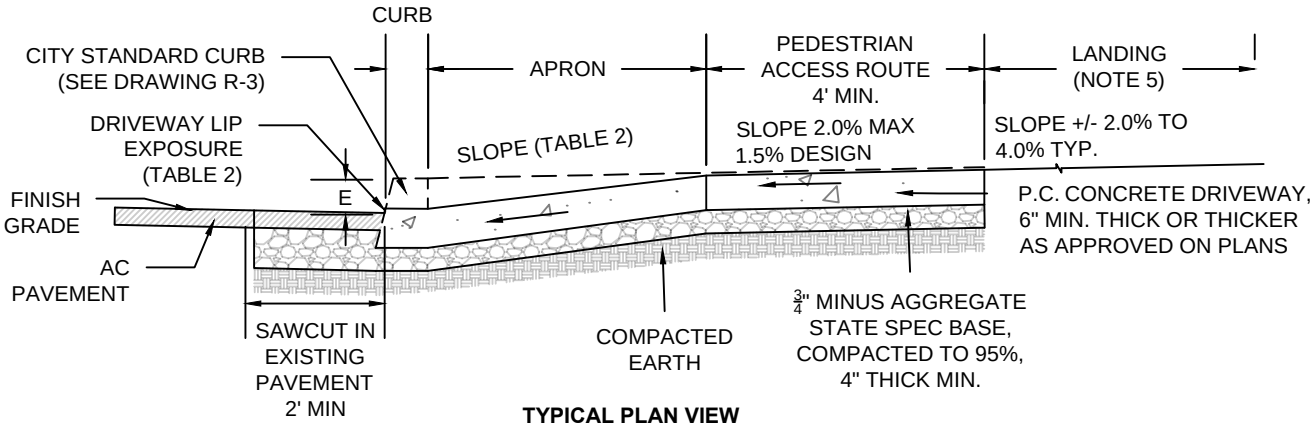

TYPICAL PLAN VIEW
DRIVEWAY APPROACH, CURB-TIGHT, WRAPPING SIDEWALK
(ALTERNATE E)

TABLE 1 - APPROACH WIDTH (W)	
TYPE	WIDTH
RESIDENTIAL	10' - 24'
MULTIFAMILY	20' - 30'
COMMERCIAL	10' - 35'

TABLE 2 - DRIVEWAY APPROACH SPECIFICATIONS WITH CURB-TIGHT WRAPPING SIDEWALK					
TYPE OF STREET	MINIMUM SIDEWALK WIDTH	CURB EXPOSURE "E"	LIP EXPOSURE (MINIMUM)	APRON GRADE, POSITIVE GRADE TO ROW	FLARE WIDTH
LOCAL	5' - 6'	6"	¾"	12.0% MAX	3'
COLLECTOR	6'	7"	1"	12.5% MAX	6'
ARTERIAL	6'	7"	1"	12.5% MAX	6'

GENERAL NOTES:
1. SIDEWALKS SHALL MEET ALL STANDARDS OF CURRENT PUBLIC RIGHTS OF WAY ACCESSIBILITY GUIDELINES (PROWAG).
2. SETBACK SIDEWALK DRIVEWAY IS STANDARD. USE CURB-TIGHT, WRAPPING SIDEWALK APPROACH AS DIRECTED OR SHOWN ON PLANS. ALTERNATE E REQUIRES A MINIMUM 4-FEET WIDE APRON.
3. CURB AND SIDEWALK TYPES VARY, SEE PLANS. SEE STD. DRG. R-3 FOR CURB DETAILS. SEE STD. DRGS. R-4A & R-4B FOR SIDEWALK DETAILS.
4. TOOLED JOINTS ARE REQUIRED AT ALL DRIVEWAY SLOPE BREAK LINES.
5. THE LANDING SHALL BE PAVED WITH CONCRETE, ASPHALT, OR OTHER APPROVED SURFACE FOR A MINIMUM OF 20 FEET. PAVING BEYOND THE LANDING SHALL BE IN ACCORDANCE WITH THE BEND DEVELOPMENT CODE. CONSTRUCT AS DIRECTED OR AS SHOWN ON PLANS. DO NOT ENTER PRIVATE PROPERTY WITHOUT APPROPRIATE PERMIT OR EASEMENT. MATERIAL WITHIN THE ROW SHALL BE CONCRETE.
6. CHECK THE GUTTER FLOW DEPTH AT DRIVEWAY LOCATIONS TO ASSURE THAT THE DESIGN FLOOD DOES NOT OVERTOP THE BACK OF SIDEWALK AT DRIVEWAY. IF OVERTOPPING OCCURS PLACE AN INLET AT UPSTREAM SIDE OF DRIVEWAY OR PERFORM OTHER APPROVED DESIGN MITIGATION.
7. #4 REBAR (2'0" ON CENTER, TO BE SUSPENDED TO CENTER OF CONCRETE DEPTH) REQUIRED IN COMMERCIAL AND INDUSTRIAL DRIVEWAYS. 6"X6" 10 GAUGE MINIMUM WELDED WIRE MAY BE USED IN LIEU OF REBAR.
8. A PUBLIC ACCESS EASEMENT MAY BE REQUIRED IF A PORTION OF THE DRIVEWAY APPROACH ENCROACHES ONTO PRIVATE PROPERTY.
9. CONCRETE DRIVEWAY APRON REQUIRED WHERE SIDEWALK AND/OR CURB IS EXISTING/PROPOSED, OTHERWISE AN ASPHALT APPROACH CAN BE INSTALLED TO EDGE OF PAVEMENT TO SIMILAR WIDTHS OF THE DRIVEWAY APRON AS APPROVED BY THE CITY ENGINEER.

DRAWN LJC	CITY OF BEND	CITY OF BEND STANDARD DRAWING 710 NW WALL ST., BEND, OREGON 97701	SCALE NTS
DIV ROADWAY			DATE 12/1/17
REV / DATE 2 / 12/1/17			APPR
	CITY OF BEND	DRIVEWAY APPROACH, CURB-TIGHT, WRAPPING SIDEWALK (ALTERNATE E)	STD DWG R-5E

TABLE 1 - APPROACH WIDTH (W)	
TYPE	WIDTH
RESIDENTIAL	10' - 24'
MULTIFAMILY	20' - 30'
COMMERCIAL	10' - 35'

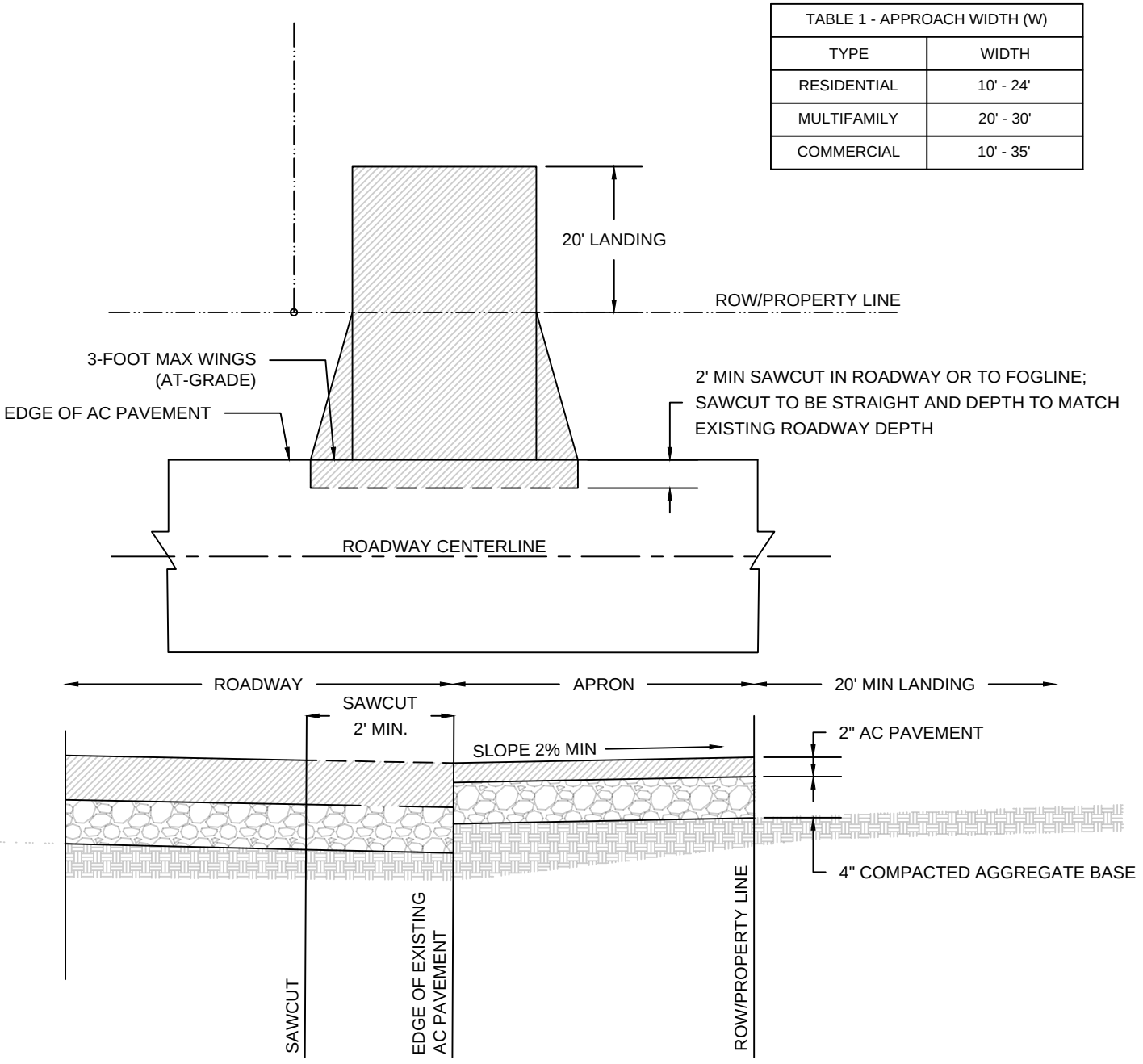

GENERAL NOTES:

1. CONCRETE DRIVEWAY APRON REQUIRED WHERE SIDEWALK AND/OR CURB IS EXISTING/PROPOSED, OTHERWISE AN ASPHALT APPROACH CAN BE INSTALLED TO EDGE OF PAVEMENT TO SIMILAR WIDTHS OF THE DRIVEWAY APRON AS APPROVED BY THE CITY ENGINEER.

DRAWN LJC	CITY OF BEND	CITY OF BEND	SCALE NTS
DIV ROADWAY		STANDARD DRAWING	DATE 12/1/17
REV / DATE		710 NW WALL ST., BEND, OREGON 97701	APPR
		DRIVEWAY APPROACH, ASPHALT	STD DWG R-5F

GRADE BREAKS. GRADE BREAKS AT THE TOP AND BOTTOM OF PERPENDICULAR CURB RAMPS SHALL BE PERPENDICULAR TO THE DIRECTION OF RAMP RUN. AT LEAST ONE END OF THE BOTTOM GRADE BREAK SHALL BE AT THE BACK OF CURB. GRADE BREAKS SHALL NOT BE PERMITTED ON THE SURFACE OF CURB RAMPS, BLENDED TRANSITIONS, LANDINGS, AND GUTTER AREAS WITHIN THE PEDESTRIAN ACCESS ROUTE. SURFACE SLOPES THAT MEET THE GRADE BREAKS SHALL BE FLUSH

TECHNICALLY NOT A PART OF THE PEDESTRIAN CIRCULATION PATH; HOWEVER, APPLY PROWAG R303.2.1.4 REQUIREMENTS FOR FLARES.

CURB EXPOSURE TO BE MINIMUM 3-INCHES (6-INCH PREFERRED) BETWEEN RAMPS UNLESS OTHERWISE APPROVED.

PROWAG DISCUSSION OF PROVISIONS. DETECTABLE WARNINGS PROVISIONS IN THIS DRAFT HAVE ALSO BEEN CLARIFIED WITH RESPECT TO THEIR PERMITTED SETBACK FROM THE GRADE BREAK MARKING THE FACE OF THE CURB. ONE CORNER OF THE DETECTABLE WARNING MUST BE WITHIN 8 in. OF THE GRADE BREAK; NO OTHER POINT ON THE LEADING EDGE OF THE DETECTABLE WARNING MAY BE MORE THAN 5 ft. FROM THE GRADE BREAK

DETECTABLE WARNINGS. DETECTABLE WARNING SURFACES COMPLYING WITH R305 SHALL BE PROVIDED, WHERE A CURB RAMP, LANDING, OR BLENDED TRANSITION CONNECTS TO A STREET.

SIZE. DETECTABLE WARNING SURFACES SHALL EXTEND 24 in. MINIMUM IN THE DIRECTION OF TRAVEL AND THE FULL WIDTH OF THE CURB RAMP (EXCLUSIVE OF FLARES), THE LANDING, OR THE BLENDED TRANSITION.

PERPENDICULAR CURB RAMPS. WHERE BOTH ENDS OF THE BOTTOM GRADE BREAK COMPLYING WITH R303.3.4 ARE 5.0 ft. OR LESS FROM THE BACK OF CURB, THE DETECTABLE WARNING SHALL BE LOCATED ON THE RAMP SURFACE AT THE BOTTOM GRADE BREAK. WHERE EITHER END OF THE BOTTOM GRADE BREAK IS MORE THAN 5.0 ft. FROM THE BACK OF CURB, THE DETECTABLE WARNING SHALL BE LOCATED ON THE LOWER LANDING.

ALIGNMENT. THE ROWS OF TRUNCATED DOMES IN A DETECTABLE WARNING SURFACE SHALL BE ALIGNED TO BE PERPENDICULAR OR RADIAL TO THE GRADE BREAK BETWEEN THE RAMP, LANDING, OR BLENDED TRANSITION AND THE STREET.

RAMPS AND LANDING SHALL BE POURED 6" THICK WITH CONCRETE CONFORMING TO CITY CONCRETE SPECIFICATIONS 00440.12

CROSS SLOPE. THE CROSS SLOPE OF RAMPS, BLENDED TRANSITIONS, AND TURNING SPACES SHALL BE 2% MAXIMUM.

PEDESTRIAN STREET CROSSINGS WITHOUT YIELD OR STOP CONTROL. WHERE PEDESTRIAN STREET CROSSINGS WITHOUT YIELD OR STOP CONTROL, THE CROSS SLOPE OF THE PEDESTRIAN ACCESS ROAD SHALL BE 5 PERCENT MAX.

COUNTER SLOPES. THE COUNTER SLOPE OF THE GUTTER OR STREET AT THE FOOT OF A CURB RAMP, LANDING, OR BLENDED TRANSITION SHALL BE 5% MAXIMUM

SURFACE DISCONTINUITIES. SURFACE DISCONTINUITIES SHALL NOT EXCEED 0.5 in. MAXIMUM. VERTICAL DISCONTINUITIES BETWEEN 0.25 in. AND 0.5 in. MAXIMUM SHALL BE BEVELED AT 1:2 MINIMUM. THE BEVEL SHALL BE APPLIED ACROSS THE ENTIRE LEVEL CHANGE.

NOTE: THE CITY OF BEND PREFERS A GUTTER LIP AT THE RAMP TO BE FLUSH WITH ASPHALT.

FLARES. FLARED SIDES WITH A SLOPE OF 10% MAXIMUM, MEASURED PARALLEL TO THE CURB LINE, SHALL BE PROVIDED WHERE A PEDESTRIAN CIRCULATION PATH CROSSES THE CURB RAMP OR WHEN THE FLARE ABUTS A HARD SURFACE. THE CITY OF BEND REQUIRES FLARES UNLESS BARRIERS EXIST OR WHERE APPROVED BY THE CITY ENGINEER.

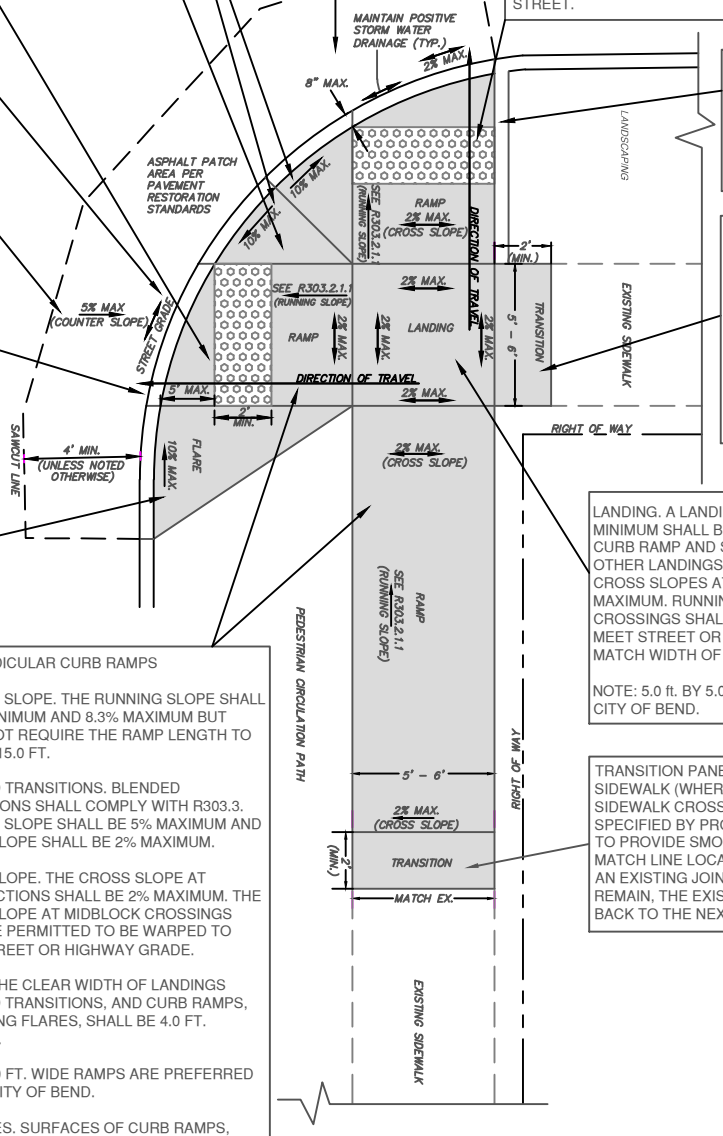

ADVISORY FLARES. SIDE OF RAMPS MAY BE RETURNED, PROVIDING USEFUL DIRECTIONAL CUES, IF PROTECTED FROM CROSS TRAVEL BY LANDSCAPING, STREET FURNITURE, POLES, OR EQUIPMENT.

TRANSITION PANEL FROM RAMP TO EXISTING SIDEWALK (WHERE REQUIRED TO MATCH EX. SIDEWALK CROSS SLOPE). MAX. GRADES ARE NOT SPECIFIED BY PROWAG. ADJUST LENGTH AS NEEDED TO PROVIDE SMOOTH TRANSITION. IF PROPOSED MATCH LINE LOCATION FALLS WITHIN 2 FT. FROM AN EXISTING JOINT IN THE SECTION OF SIDEWALK TO REMAIN, THE EXISTING WALK SHALL BE REMOVED BACK TO THE NEXT JOINT.

LANDING. A LANDING 5.0 ft. MINIMUM BY 5.0 ft. MINIMUM SHALL BE PROVIDED AT THE TOP OF THE CURB RAMP AND SHALL BE PERMITTED TO OVERLAP OTHER LANDINGS AND CLEAR SPACE. RUNNING AND CROSS SLOPES AT INTERSECTIONS SHALL BE 2% MAXIMUM. RUNNING AND CROSS SLOPE AT MIDBLOCK CROSSINGS SHALL BE PERMITTED TO BE WARPED TO MEET STREET OR HIGHWAY GRADE. LANDING SHALL MATCH WIDTH OF APPROACHING SIDEWALKS.

NOTE: 5.0 ft. BY 5.0 ft. LANDING IS PREFERRED BY THE CITY OF BEND.

TRANSITION PANEL FROM RAMP TO EXISTING SIDEWALK (WHERE REQUIRED TO MATCH EX. SIDEWALK CROSS SLOPE). MAX. GRADES ARE NOT SPECIFIED BY PROWAG. ADJUST LENGTH AS NEEDED TO PROVIDE SMOOTH TRANSITION. IF PROPOSED MATCH LINE LOCATION FALLS WITHIN 2 FEET FROM AN EXISTING JOINT IN THE SECTION OF SIDEWALK TO REMAIN, THE EXISTING WALK SHALL BE REMOVED BACK TO THE NEXT JOINT.

NOTES :

1. THESE ARE THE PROWAG AS CONSTRUCTED REQUIREMENTS. SLOPES USED FOR DESIGN ARE SIGNIFICANTLY LESS THAN THESE MAXIMUMS TO ALLOW FOR CONSTRUCTION TOLERANCES, UNLESS NOTED OTHERWISE. SEE THE PROWAG DOCUMENT FOR THE COMPLETE REQUIREMENTS.

2. RAMPS AND LANDINGS SHALL BE DESIGNED NOT TO THE MAX SLOPE ALLOWED UNDER PROWAG. DESIGN SLOPES SHALL MATCH THE FOLLOWING: WHERE PROWAG PERMITS 8.33% MAX SLOPE (12:1 RISE/RUN), DESIGN SHALL BE 7.5%. WHERE PROWAG PERMITS 2% MAX SLOPE (48:1 RUN/RISE), DESIGN SHALL BE 1.5%.

3. WHERE SIDEWALKS ARE CONSTRUCTED OUTSIDE THE RIGHT OF WAY, A PUBLIC ACCESS EASEMENT MUST BE RECORDED OVER THE PRIVATE PROPERTY ENCROACHMENT.

4. 6 INCHES OF CONCRETE AND 4 INCHES OF STATE SPEC BASE ROCK, COMPACTED TO 95%, IS REQUIRED FOR CONSTRUCTION OF CURB RAMPS.

PERPENDICULAR CURB RAMPS

RUNNING SLOPE. THE RUNNING SLOPE SHALL BE 5% MINIMUM AND 8.3% MAXIMUM BUT SHALL NOT REQUIRE THE RAMP LENGTH TO EXCEED 15.0 FT.

BLENDED TRANSITIONS. BLENDED TRANSITIONS SHALL COMPLY WITH R303.3. RUNNING SLOPE SHALL BE 5% MAXIMUM AND CROSS SLOPE SHALL BE 2% MAXIMUM.

CROSS SLOPE. THE CROSS SLOPE AT INTERSECTIONS SHALL BE 2% MAXIMUM. THE CROSS SLOPE AT MIDBLOCK CROSSINGS SHALL BE PERMITTED TO BE WARPED TO MEET STREET OR HIGHWAY GRADE.

WIDTH. THE CLEAR WIDTH OF LANDINGS BLENDED TRANSITIONS, AND CURB RAMPS, EXCLUDING FLARES, SHALL BE 4.0 FT. MINIMUM.

NOTE: 5.0 FT. WIDE RAMPS ARE PREFERRED BY THE CITY OF BEND.

SURFACES. SURFACES OF CURB RAMPS, BLENDED TRANSITIONS, AND LANDINGS SHALL COMPLY WITH R301. GRATINGS, ACCESS COVERS, AND OTHER APPURTENANCES SHALL NOT BE LOCATED ON CURB RAMPS, LANDINGS, BLENDED TRANSITIONS AND GUTTERS WITHIN THE PEDESTRIAN ACCESS ROUTE.

TYPICAL PERPENDICULAR CURB RAMP ACCORDING TO PROWAG REQUIREMENTS

NOT TO SCALE – ROTATED TO FIT

DRAWN LJC	CITY OF BEND	CITY OF BEND	SCALE NTS
DIV ROADWAY		STANDARD DRAWING	DATE 3/31/19
REV | DATE		710 NW WALL ST., BEND, OREGON 97701	APPR
		TYPICAL PERPENDICULAR CURB RAMP	STD DWG R-6A

DETECTABLE WARNINGS. DETECTABLE WARNING SURFACES COMPLYING WITH R304 SHALL BE PROVIDED, WHERE A CURB RAMP, LANDING, OR BLENDED TRANSITION CONNECTS TO A STREET.

SIZE. DETECTABLE WARNING SURFACES SHALL EXTEND 24 in. MINIMUM IN THE DIRECTION OF TRAVEL AND THE FULL WIDTH OF THE CURB RAMP (EXCLUSIVE OF FLARES), THE LANDING, OR THE BLENDED TRANSITION.

ALIGNMENT. THE ROWS OF TRUNCATED DOMES IN A DETECTABLE WARNING SURFACE SHALL BE ALIGNED TO BE PERPENDICULAR OR RADIAL TO THE GRADE BREAK BETWEEN THE RAMP, LANDING, OR BLENDED TRANSITION AND THE STREET.

CROSS SLOPE. THE CROSS SLOPE OF RAMPS, BLENDED TRANSITIONS, AND TURNING SPACES SHALL BE 2% MAXIMUM.

PEDESTRIAN STREET CROSSINGS WITHOUT YIELD OR STOP CONTROL. WHERE PEDESTRIAN STREET CROSSINGS WITHOUT YIELD OR STOP CONTROL, THE CROSS SLOPE OF THE PEDESTRIAN ACCESS ROAD SHALL BE 5% MAX.

TRANSITION PANEL FROM RAMP TO EXISTING SIDEWALK (WHERE REQUIRED TO MATCH EX. SIDEWALK CROSS SLOPE). MAX. GRADES ARE NOT SPECIFIED BY PROWAG. ADJUST LENGTH AS NEEDED TO PROVIDE SMOOTH TRANSITION. IF PROPOSED MATCH LINE LOCATION FALLS WITHIN 2 FEET FROM AN EXISTING JOINT IN THE SECTION OF SIDEWALK TO REMAIN, THE EXISTING WALK SHALL BE REMOVED BACK TO THE NEXT JOINT.

COUNTER SLOPES. THE COUNTER SLOPE OF THE GUTTER OR STREET AT THE FOOT OF A CURB RAMP, LANDING, OR BLENDED TRANSITION SHALL BE 5% MAXIMUM

GRADE BREAKS. GRADE BREAKS AT THE TOP AND BOTTOM OF PERPENDICULAR CURB RAMPS SHALL BE PERPENDICULAR TO THE DIRECTION OF RAMP RUN. AT LEAST ONE END OF THE BOTTOM GRADE BREAK SHALL BE AT THE BACK OF CURB. GRADE BREAKS SHALL NOT BE PERMITTED ON THE SURFACE OF CURB RAMPS, BLENDED TRANSITIONS, LANDINGS, AND GUTTER AREAS WITHIN THE PEDESTRIAN ACCESS ROUTE. SURFACE SLOPES THAT MEET THE GRADE BREAKS SHALL BE FLUSH.

SURFACE DISCONTINUITIES. SURFACE DISCONTINUITIES SHALL NOT EXCEED 0.5 in. MAXIMUM. VERTICAL DISCONTINUITIES BETWEEN 0.25 in. AND 0.5 in. MAXIMUM SHALL BE BEVELED AT 1:2 MINIMUM. THE BEVEL SHALL BE APPLIED ACROSS THE ENTIRE LEVEL CHANGE.

NOTE: THE CITY OF BEND PREFERS A GUTTER LIP AT THE RAMP TO BE FLUSH WITH ASPHALT.

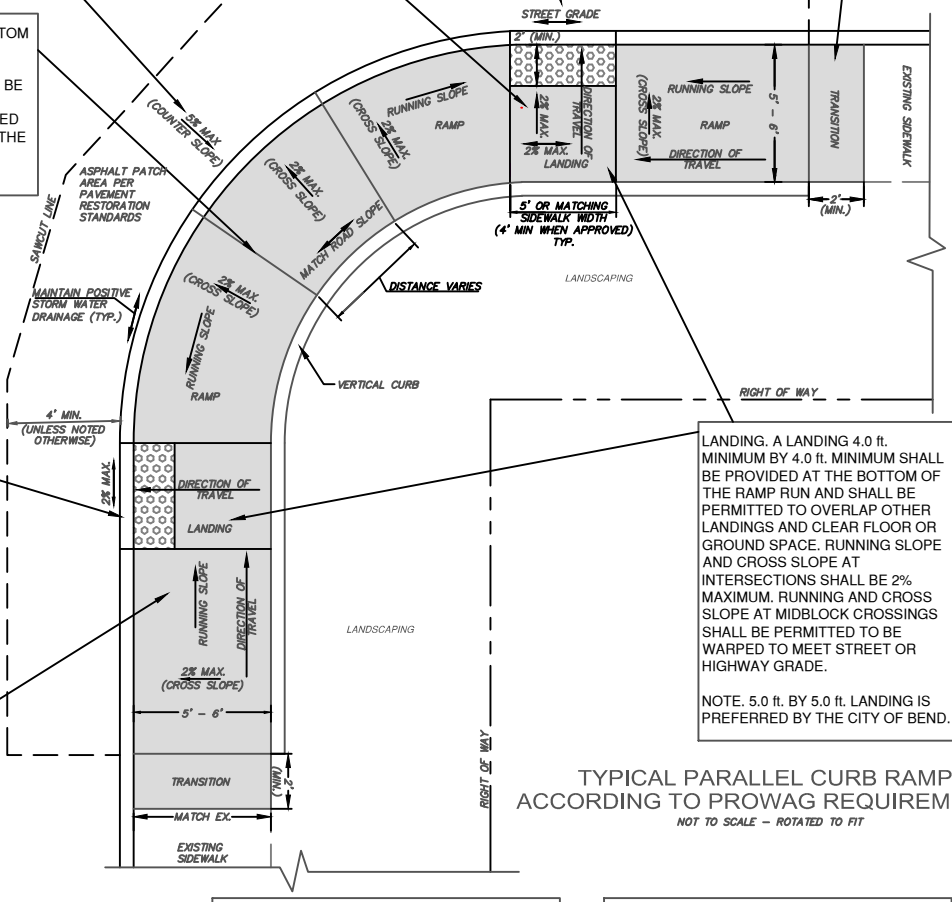

TYPICAL PARALLEL CURB RAMP
ACCORDING TO PROWAG REQUIREMENTS
NOT TO SCALE – ROTATED TO FIT

PARALLEL CURB RAMPS

RUNNING SLOPE. THE RUNNING SLOPE SHALL BE 8.3% MAXIMUM BUT SHALL NOT REQUIRE THE RAMP LENGTH TO EXCEED 15.0 ft.

CROSS SLOPE. THE CROSS SLOPE SHALL BE 2% MAXIMUM.

DIVERGING SIDEWALKS. WHERE A PARALLEL CURB RAMP DOES NOT OCCUPY THE ENTIRE WIDTH OF A SIDEWALK, DROP-OFFS AT DIVERGING SEGMENTS SHALL BE PROTECTED.

WIDTH. THE CLEAR WIDTH OF LANDINGS BLENDED TRANSITIONS, AND CURB RAMPS, EXCLUDING FLARES, SHALL BE 4.0 ft. MINIMUM.

NOTE: 5.0 ft. WIDE RAMPS ARE PREFERRED BY THE CITY OF BEND.

SURFACES. SURFACES OF CURB RAMPS, BLENDED TRANSITIONS, AND LANDINGS SHALL COMPLY WITH R301. GRATINGS, ACCESS COVERS, AND OTHER APPURTENANCES SHALL NOT BE LOCATED ON CURB RAMPS, LANDINGS, BLENDED TRANSITIONS AND GUTTERS WITHIN THE PEDESTRIAN ACCESS ROUTE.

LANDING. A LANDING 4.0 ft. MINIMUM BY 4.0 ft. MINIMUM SHALL BE PROVIDED AT THE BOTTOM OF THE RAMP RUN AND SHALL BE PERMITTED TO OVERLAP OTHER LANDINGS AND CLEAR FLOOR OR GROUND SPACE. RUNNING SLOPE AND CROSS SLOPE AT INTERSECTIONS SHALL BE 2% MAXIMUM. RUNNING AND CROSS SLOPE AT MIDBLOCK CROSSINGS SHALL BE PERMITTED TO BE WARPED TO MEET STREET OR HIGHWAY GRADE.

NOTE. 5.0 ft. BY 5.0 ft. LANDING IS PREFERRED BY THE CITY OF BEND.

NOTES :
1. THESE ARE THE PROWAG AS CONSTRUCTED REQUIREMENTS. SLOPES USED FOR DESIGN ARE SIGNIFICANTLY LESS THAN THESE MAXIMUMS TO ALLOW FOR CONSTRUCTION TOLERANCES, UNLESS NOTED OTHERWISE.

2. THIS IS INTENDED AS A SUMMARY OF PROWAG REQUIREMENTS. SEE THE PROWAG DOCUMENT FOR THE COMPLETE REQUIREMENTS.

3. ANGLE POINT ALTERNATE IS ONLY ALLOWED WHEN DIRECTIONAL RAMPS ARE NOT POSSIBLE AND MUST BE APPROVED BY THE CITY ENGINEER.

4. DESIGN SLOPES: RAMPS AND LANDINGS SHALL BE DESIGNED NOT TO THE MAX SLOPE ALLOWED UNDER PROWAG. DESIGN SLOPES SHALL MATCH THE FOLLOWING: WHERE PROWAG PERMITS 8.33% MAX SLOPE (12:1 RUN/RISE), DESIGN SHALL BE 7.5%. WHERE PROWAG PERMITS 2% MAX SLOPE (48:1 RUN/RISE), DESIGN SHALL BE 1.5%.

5. WHERE SIDEWALKS ARE CONSTRUCTED OUTSIDE THE RIGHT OF WAY, A PUBLIC ACCESS EASEMENT MUST BE RECORDED OVER THE PRIVATE PROPERTY ENCROACHMENT.

6. 6 INCHES OF CONCRETE AND 4 INCHES OF STATE SPEC AGGREGATE BASE, COMPACTED TO 95%, ARE REQUIRED FOR CONSTRUCTION OF CURB RAMPS. CONCRETE SHALL CONFORM TO CITY CONCRETE SPECIFICATIONS 00440.12

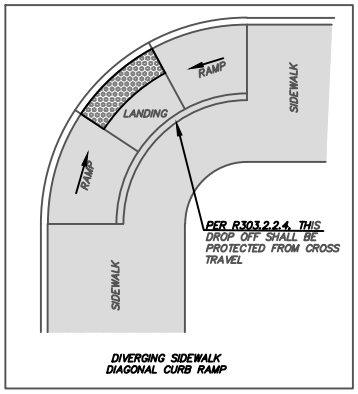

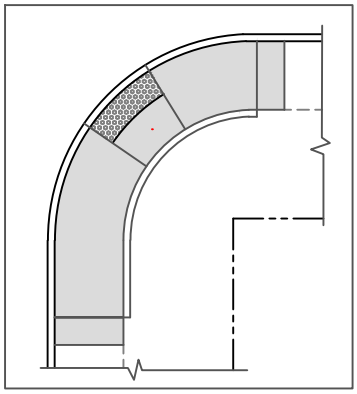

TYPICAL DIAGONAL CURB RAMP
REQUIRES CITY APPROVAL FOR CONSTRUCTION
ACCORDING TO PROWAG REQUIREMENTS
NOT TO SCALE – ROTATED TO FIT

DRAWN LJC	CITY OF BEND	CITY OF BEND	SCALE NTS
DIV ROADWAY		STANDARD DRAWING	DATE 3/31/19
REV DATE		710 NW WALL ST., BEND, OREGON 97701	APPR
		TYPICAL PARALLEL CURB RAMP	STD DWG R-6B

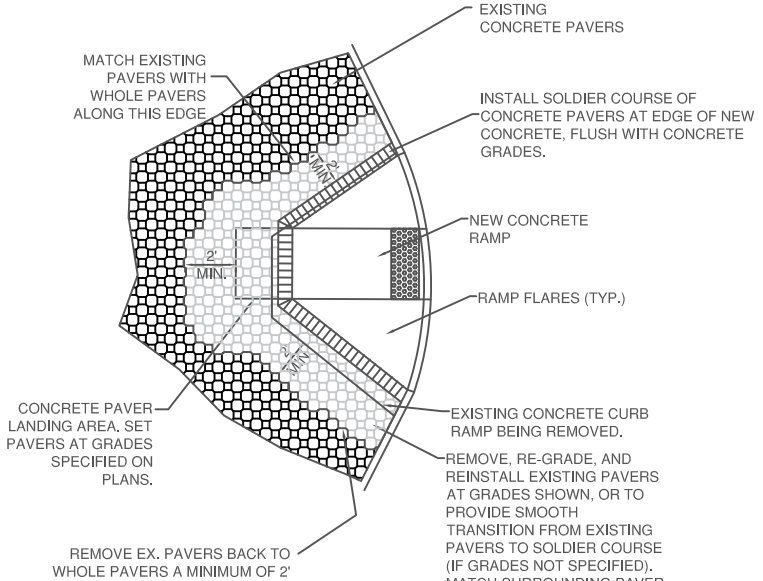

NOTE: SET CONCRETE PAVERS IN ACCORDANCE WITH CITY OF BEND STANDARDS AND SPECIFICATIONS.

PAVER REPLACEMENT DETAIL

NOT TO SCALE

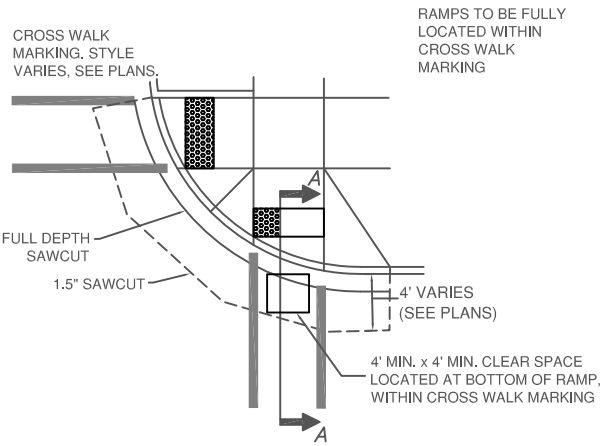

CROSS WALK - CURB RAMP ORIENTATION

NOT TO SCALE

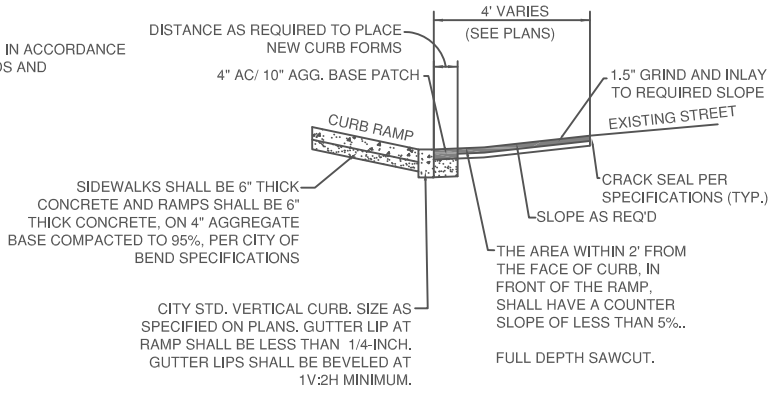

NOTE: IN AREAS WITH UNIT PAVER CROSS WALKS, REMOVE EXISTING PAVERS, AND RE-INSTALL AT GRADES TO ACHIEVE THESE REQUIREMENTS.

TYPICAL RAMP / ASPHALT PATCH SECTION

NOT TO SCALE

DRAWN LJC	CITY OF BEND	CITY OF BEND STANDARD DRAWING 710 NW WALL ST., BEND, OREGON 97701	SCALE NTS
DIV ROADWAY			DATE 12/1/17
REV DATE			APPR
		CURB RAMP DETAILS	STD DWG R-6C

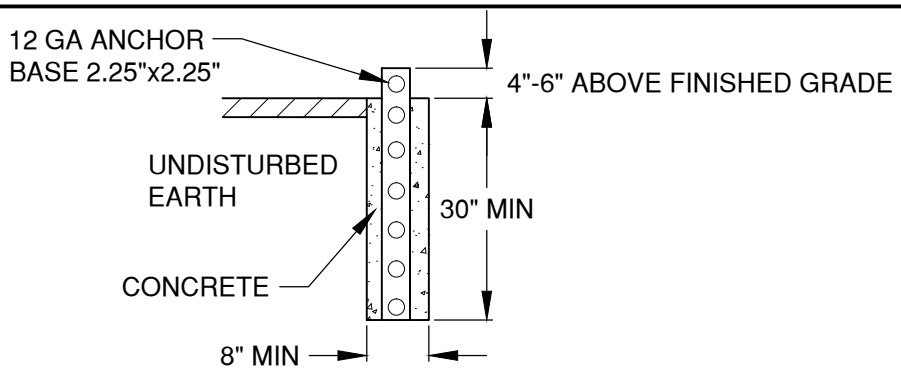

AUGERED HOLE POST HOLE DUG IN UNDISTURBED EARTH

INSTALLATION IN NEW CONSTRUCTION

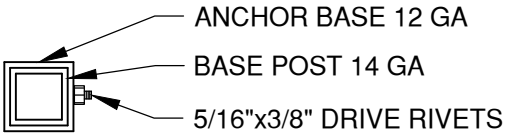

SECTION A-A

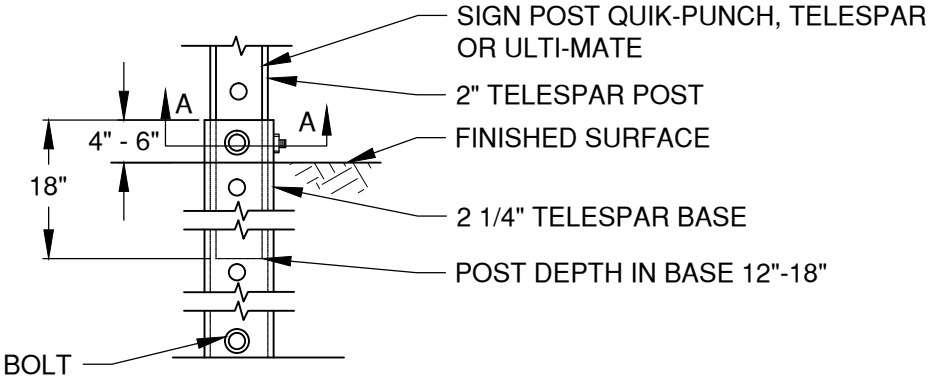

ANCHOR BASE DETAIL

NOTES:

1. ANCHOR BASE HOLES AND BOTTOM OF ANCHOR BASE SHALL BE COVERED SO THAT CONCRETE DOES NOT SEEP INTO ANCHOR BASE DURING SETTING
2. BASE SHOULD BE SET SEPARATELY FROM POST WITH ANCHOR BOLT IN BASE BOTTOM ONLY
3. POST SHOULD BE ABLE TO SLIDE FREELY WHEN RIVET IS REMOVED

DRAWN LJC	CITY OF BEND	CITY OF BEND	SCALE NTS
DIV ROADWAY		STANDARD DRAWING	DATE 12/1/17
REV / DATE		710 NW WALL ST., BEND, OREGON 97701	APPR
2 / 12/1/17		STANDARD STREET SIGN SUPPORTS	STD DWG R-7

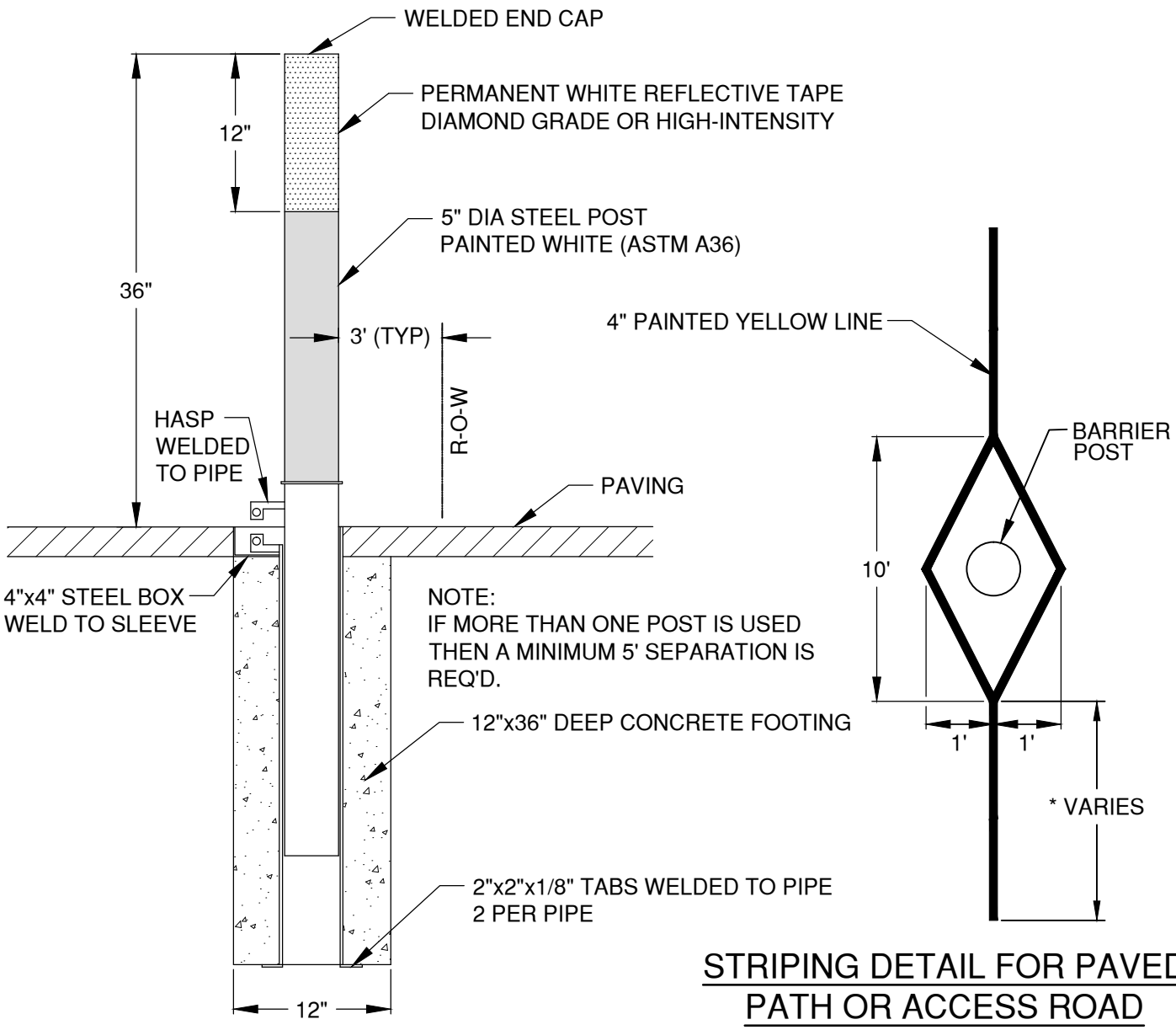

STRIPING DETAIL FOR PAVED PATH OR ACCESS ROAD

* Length of approach line varies by location, where possible, 25' min.

NOTES:

1. POSTS OR BOLLARDS SHALL BE SET BACK BEYOND THE CLEAR ZONE OF THE ADJACENT STREET OR BE OF A BREAKAWAY DESIGN. THE POST SHALL BE PERMANENTLY REFLECTORIZED FOR NIGHTTIME VISIBILITY AND PAINTED WHITE FOR IMPROVED DAYTIME AND NIGHT TIME VISIBILITY.
2. ON PAVED PATHS OR ACCESS ROADS, APPLY PAVEMENT MARKINGS PER STRIPING DETAIL.

DRAWN LJC	CITY OF BEND	CITY OF BEND STANDARD DRAWING 710 NW WALL ST., BEND, OREGON 97701	SCALE NTS
DIV ROADWAY			DATE 12/1/17
REV 2 / DATE 12/1/17			APPR
		REMOVABLE POST AND MARKINGS	STD DWG R-7A

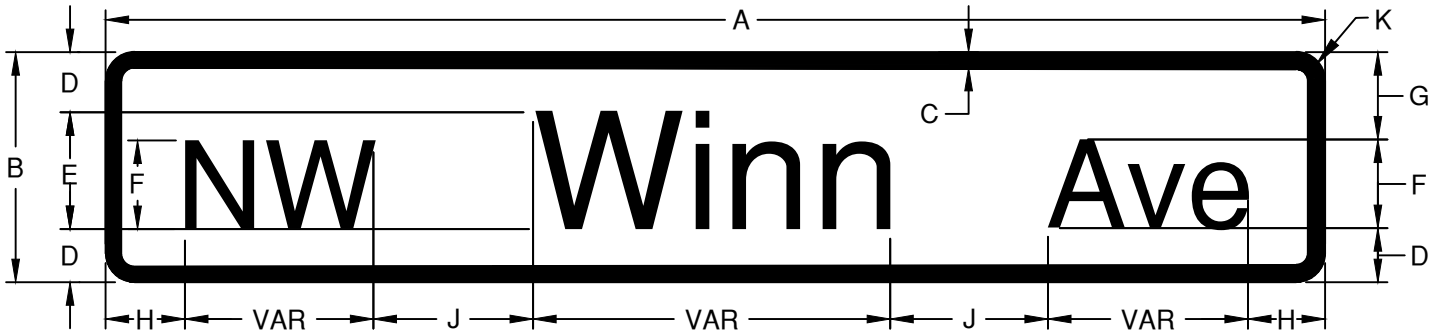

STREET NAME SIGNS



STREET NAME SIGN WITH DESCENDING STROKES

SIGN LOCATION	DIMENSIONS												
	A	B	C	D	E	F	G	H	J	K	L	M	N
LOCAL	VAR	8	0.375	2	4C	3C	3	3 MIN	3	1	1.75	2.25	2.75
COLLECTOR/ ARTERIAL ≤ 40MPH	VAR	12	0.5	3	6C	4.5C	5	4.5 MIN	4.5	1.5	2.75	3.25	4.75
COLLECTOR/ ARTERIAL > 40 MPH	VAR	18	0.75	5	8C	6C	7.67	5.33 MIN	6	1.875	5	5	7.67
OVERHEAD	VAR	24	1	6	12C	9C	10	9 MIN	9	2.25	5	6	9.50

Notes:

1. Signs installed along public streets shall be fabricated and installed to conform to the MUTCD and City of Bend specifications.
2. Unless otherwise specified, street name signs shall be fabricated as follows:
   a. Sign Substrate: sheet aluminum (gauge 0.80 for ground-mount) with rounded corners
   b. Retro-reflective Sheeting: Green background with White legend, using HIP/Type G for ground-mounted signs, and Diamond grade/Type G2 for signs mounted overhead;
   c. Lettering shall be lower-case with initial upper-case letters;
   d. Series C 2000 Font, with lettering and letter spacing per the Federal Highway Administration's Standard Alphabets as shown in the current edition of the Standard Highway Signs and Pavement Markings Manual. (* Except for overhead signs, where signs exceed 36" long, series B2000 font shall be used);
   e. Bottom street signs (closest to the regulatory/stop sign) shall be double sided with predrilled holes. Signs shall be riveted back to back on the square tube post , centered on the post.
   f. Top street sign shall be single-sided.
3. All signs shall be reviewed and approved by the City of Bend Engineering Department prior to fabrications and installation.
4. Typical installation includes 2-inch square tube caps with 90-degree angle brackets on 2-inch perforated square tube steel posts. Use 5- or 6-inch blade mounts for signs less than 36" wide; 12-inch mounts for signs 36-inches or wider or over 6-inches high. See Standard Drawings R-7 and R-9.
5. Sign widths vary with legend. Where site constraints limit available space, reduced letter height, font style, line spacing, or edge spacing will be considered. Reductions in spacing between letters or words is not permitted.
6. Where private streets intersect with public streets, install a black on yellow PRIVATE DR sign with 4-inch capital letters (ODOT Sign Policy sign #OW14-3) directly below the private street name sign (or on a separate post, if not at an intersection).
7. For additional information, refer to MUTCD Section 2A and 2D, and City of Bend technical specification Section 00940.
8. Confirm sign size with City Engineer for signs on existing traffic signal poles or mast arms.

DRAWN			CITY OF BEND	CITY OF BEND STANDARD DRAWING 710 NW WALL ST., BEND, OREGON 97701	SCALE NTS
DIV ROADWAY					DATE 3/31/19
REV	DATE	APPR			APPR
				STANDARD STREET NAME SIGNS	STD DWG R-8

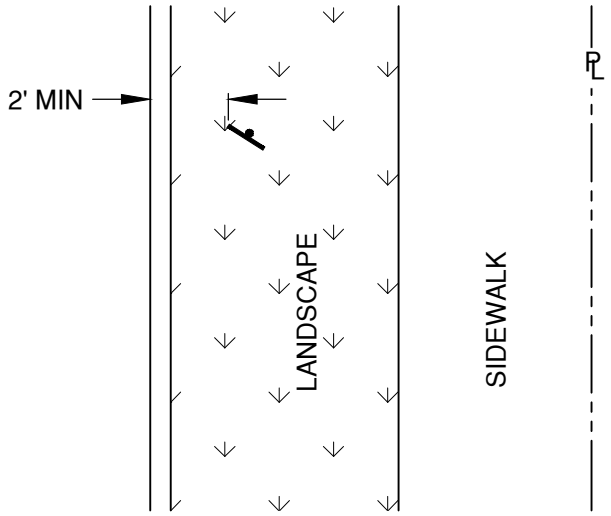

SIDEWALK PROPERTY TIGHT

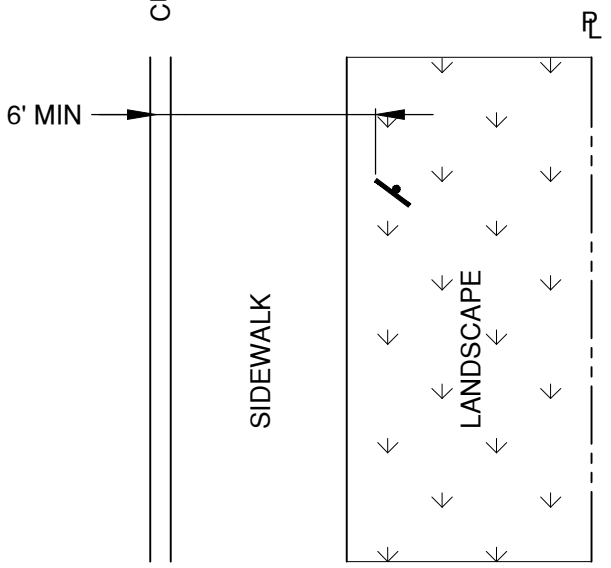

SIDEWALK CURB TIGHT

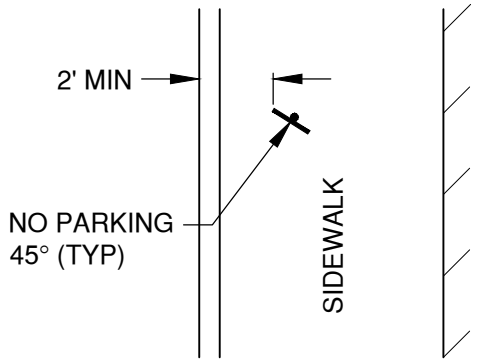

SIDEWALK FROM CURB TO NEAR BUILD

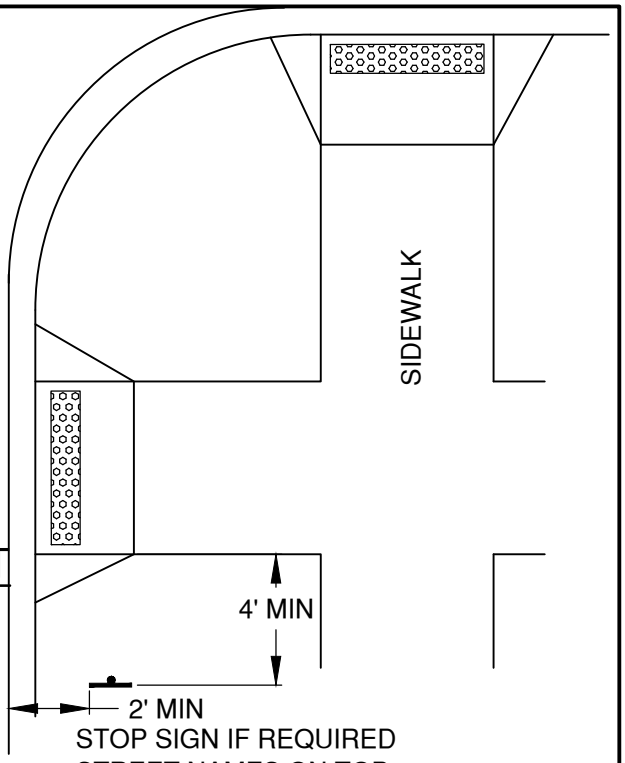

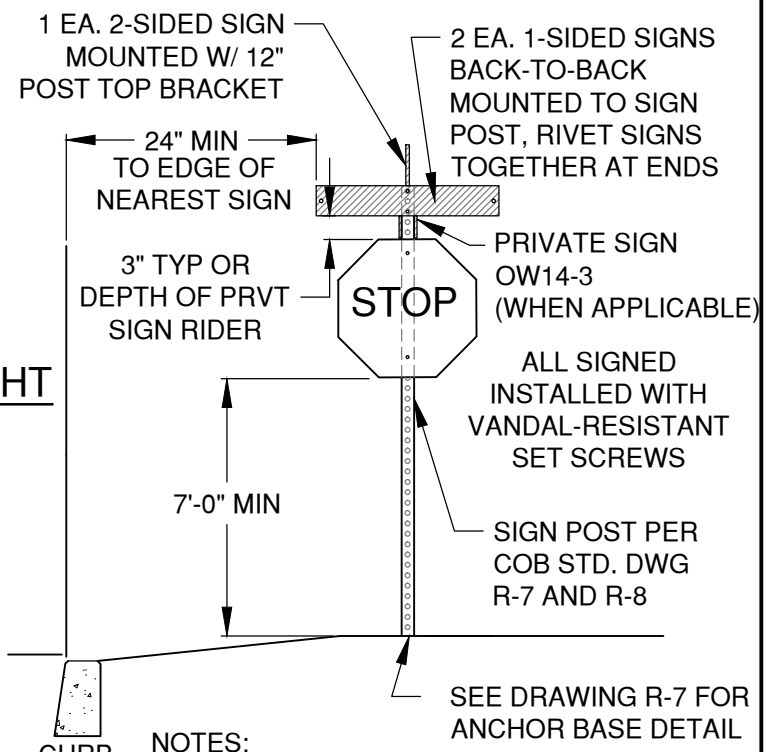

NOTES:
1) SET TO MUTCD SPECS SEE R-8 FOR COB STREET NAME SIGN REQUIREMENTS.
2) CHECK THAT SIGN IS NOT OBSCURED BY VEGETATION, TRIM IF NEEDED.

DRAWN LJC DIV ROADWAY REV DATE	CITY OF BEND	CITY OF BEND STANDARD DRAWING 710 NW WALL ST., BEND, OREGON 97701 STANDARD STREET SIGN PLACEMENT	SCALE NTS DATE 3/31/19 APPR STD DWG R-9

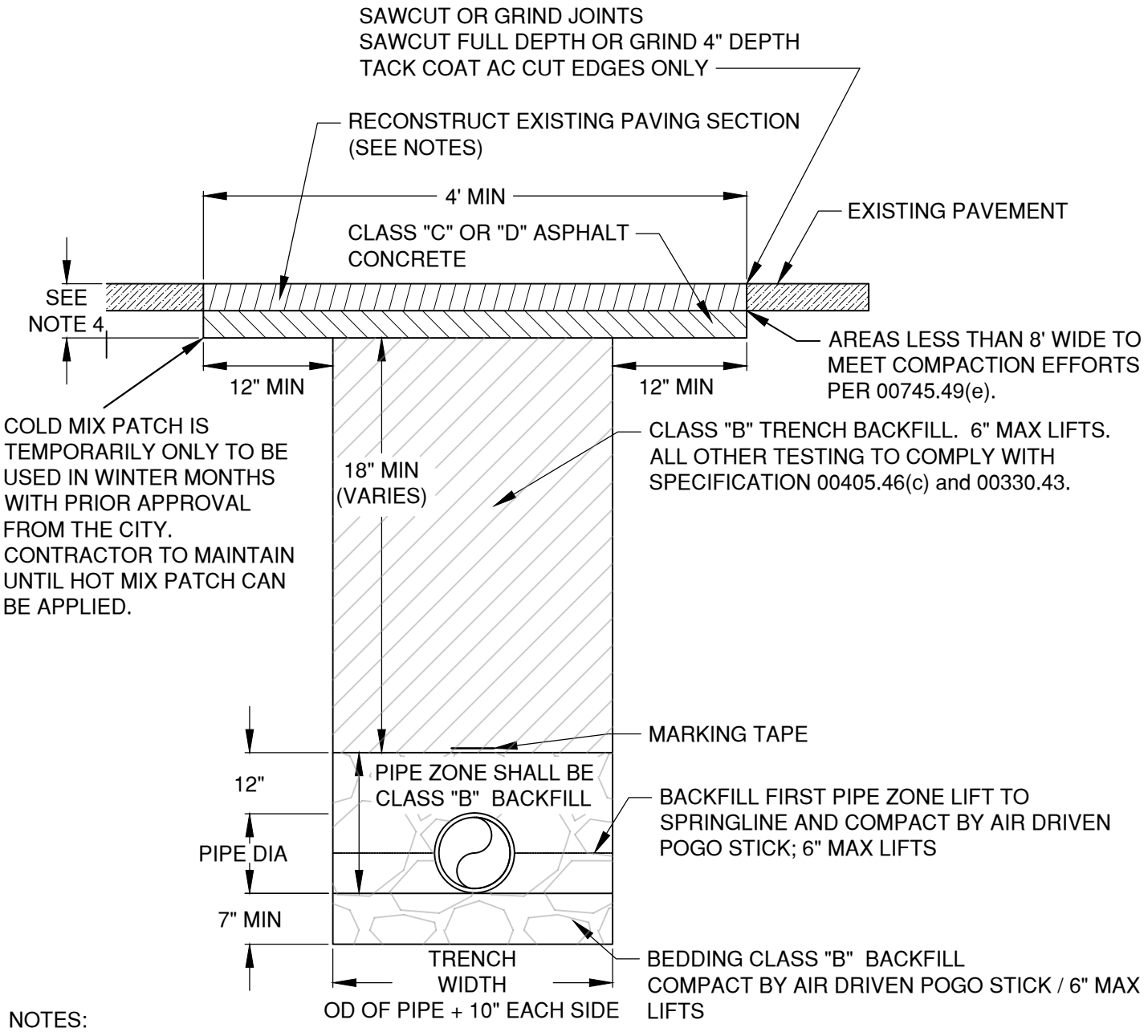

NOTES:

1. CDF/CLSM - COMPLY WITH SPECIFICATION 00442
2. ALL EXISTING AC OR PCC PAVEMENT SHALL BE SAWCUT PRIOR TO REPAVING. CONCRETE SHALL BE CUT AND REPLACED TO THE NEAREST JOINT(S).
3. CONCRETE PAVEMENT SHALL BE REPLACED WITH CONCRETE TO A MINIMUM THICKNESS OF 6" OR TO THE THICKNESS OF REMOVED PAVEMENT, WHICHEVER IS GREATER
4. PLACE AC A MINIMUM THICKNESS AS SPECIFIED FOR MINIMUM PAVEMENT FOR STREET CONSTRUCTION OR TO THE THICKNESS OF REMOVED PAVEMENT, WHICHEVER IS GREATER. 2" LIFTS MAXIMUM FOR PLACEMENT
5. ALL COMPACTION TO COMPLY WITH SPECIFICATION SECTION 00330.43
6. THE FINAL 18" OF BACKFILL MAY BE CLASS B BACKFILL PROVIDED THE FINAL 4" TO FINISH GRADE IS PLACED AS HOT MIX ASPHALT CONCRETE PER SPECIFICATION SECTION 00745

DRAWN LJC DIV ROADWAY REV DATE	CITY OF BEND	CITY OF BEND STANDARD DRAWING 710 NW WALL ST., BEND, OREGON 97701 TRENCH IN EXISTING PAVEMENT	SCALE NTS DATE 3/31/19 APPR STD DWG R-10

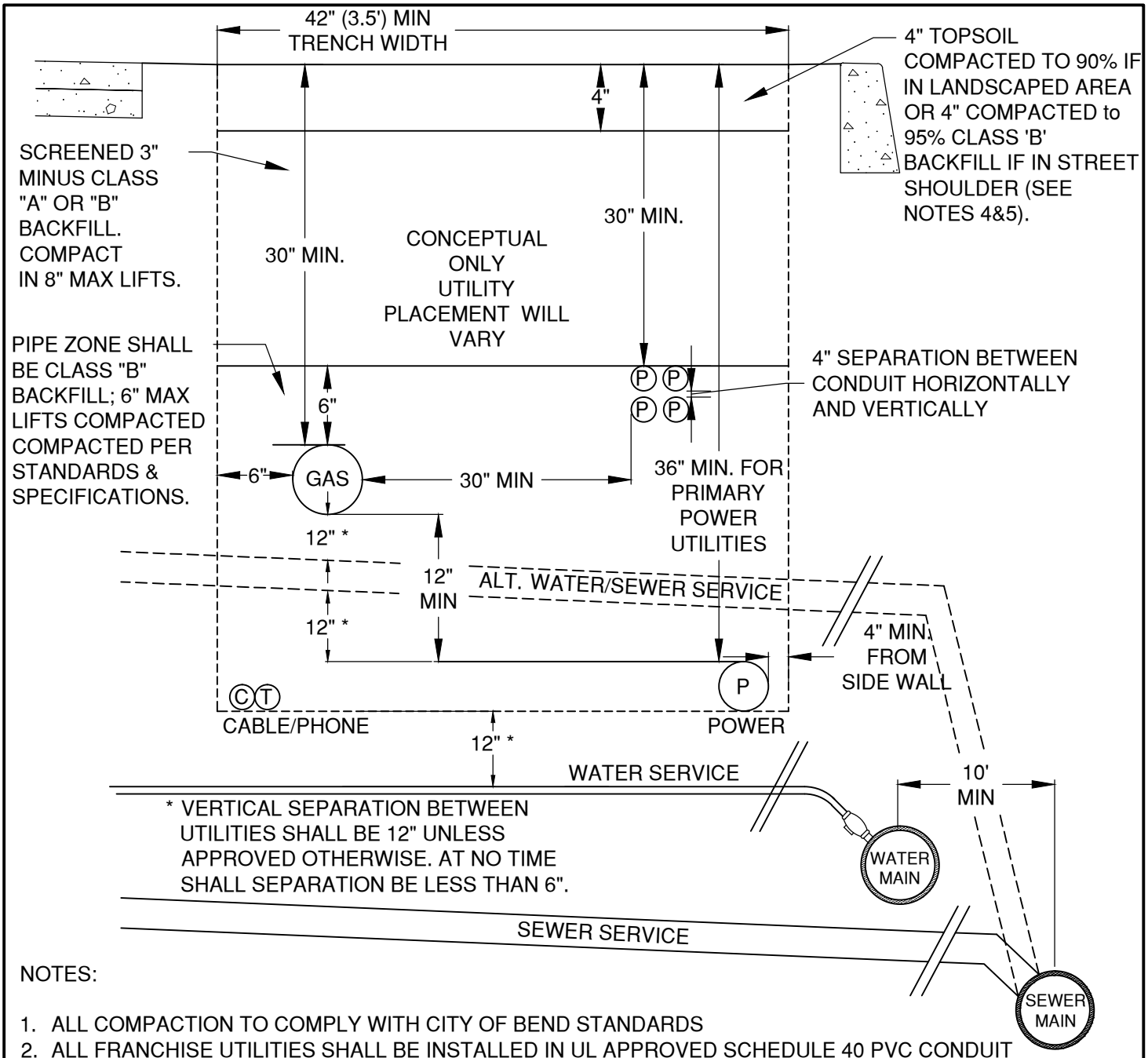

NOTES:

1. ALL COMPACTION TO COMPLY WITH CITY OF BEND STANDARDS
2. ALL FRANCHISE UTILITIES SHALL BE INSTALLED IN UL APPROVED SCHEDULE 40 PVC CONDUIT WITH SCHEDULE 40 PVC FITTINGS UNLESS OTHERWISE APPROVED.
3. UTILITY SIZES AND LOCATION SHALL BE DETERMINED BY THE UTILITY COMPANY. LOCATION TO BE SHOWN AND APPROVED BY CITY WITH A RIGHT OF WAY (ROW) PERMIT.
4. WHERE STORM SWALES ARE PROPOSED WITHIN THE LANDSCAPE STRIP, FRANCHISE UTILITIES SHALL BE INSTALLED OUTSIDE OF THE SWALE AREA.
5. TOP SOIL LAYER TO BE COMPACTED TO 90% MAX DENSITY. WHERE SIDEWALK IS PLACED OVER FRANCHISE UTILITY TRENCH, NO TOP SOIL SHALL BE PLACED AND SIDEWALK TO BE CONSTRUCTED TO COMPLY WITH CITY STANDARDS R-4A AND R-4B
6. STANDARD SHOWN FOR NEW CONSTRUCTION. MODIFICATIONS SHALL BE MADE WHEN WITHIN EXISTING DEVELOPMENTS WHERE APPROVED BY THE CITY ENGINEER.
7. UTILITIES OUTSIDE THE RIGHT OF WAY SHALL BE WITHIN A PUBLIC UTILITIES EASEMENT (PUE). BACKFILL AND INSTALLATION REQUIREMENTS STILL COMPLY WITH THE PUE.

DRAWN CJH	CITY OF BEND	CITY OF BEND	SCALE NTS
DIV ROADWAY		STANDARD DRAWING	DATE 12/1/2017
REV / DATE		710 NW WALL ST., BEND, OREGON 97701	APPR
12/1/2017		FRANCHISE UTILITY JOINT TRENCH	STD DWG R-10A

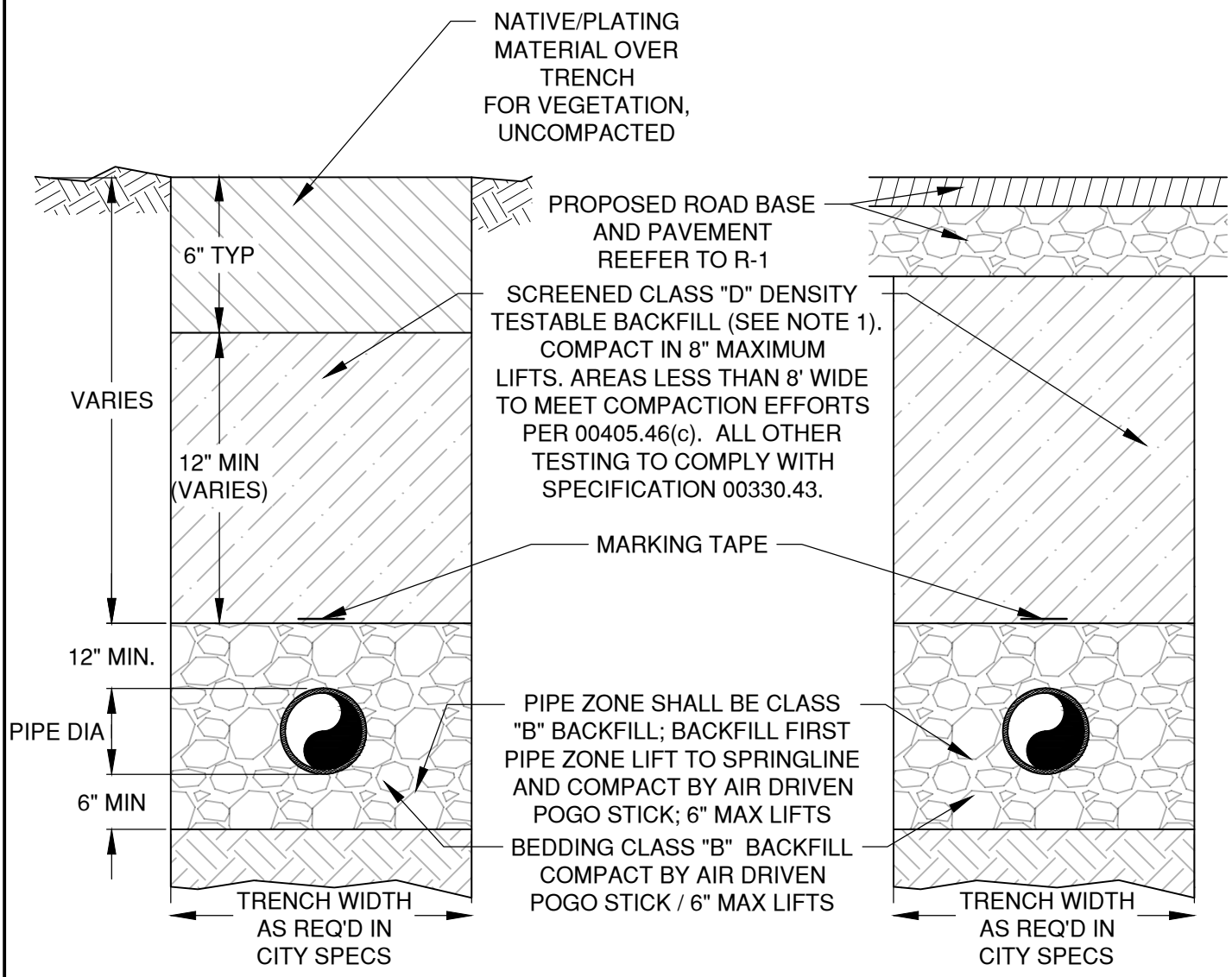

TYPICAL TRENCHING IN UNIMPROVED AREAS, PROPOSED LANDSCAPE AREAS WITHIN ROW, OR WITHIN PUBLIC UTILITY EASEMENT OUTSIDE ROADWAY

TYPICAL TRENCHING IN FULL ROAD RECONSTRUCT OR NEW PROPOSED ROADS

NOTES:

1. CLASS D BACKFILL SHALL BE PIT RUN OR BAR RUN MATERIAL, WELL-GRADED FROM COARSE TO FINE. THE MAXIMUM DIMENSION SHALL BE 3 INCHES.
2. ALL COMPACTION TO COMPLY WITH SPECIFICATION SECTION 00330.43 and 00405.46(c).
3. UNIMPROVED AREA CONSISTS OF ANY PORTION OF THE ROW THAT HAS NOT BEEN IMPROVED TO A CITY STANDARD AND CONSISTS MOSTLY OF NATIVE VEGETATED AREAS. UNIMPROVED AREAS ALSO INCLUDE AREAS WITHIN THE LANDSCAPE STRIP, PUEs, AND UNDER PROPOSED AND/OR FULLY RECONSTRUCTED STREETS, AS INDICATED IN THIS STANDARD.

DRAWN LJC DIV ROADWAY REV / DATE	CITY OF BEND	CITY OF BEND STANDARD DRAWING 710 NW WALL ST., BEND, OREGON 97701 TRENCH IN UNIMPROVED AREAS	SCALE NTS DATE 3/31/19 APPR STD DWG R-11

ROADWAY/COMMERCIAL DRIVEWAY

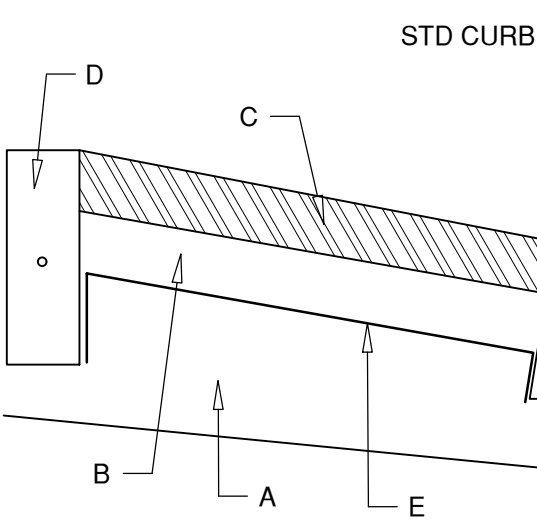

SIDEWALK

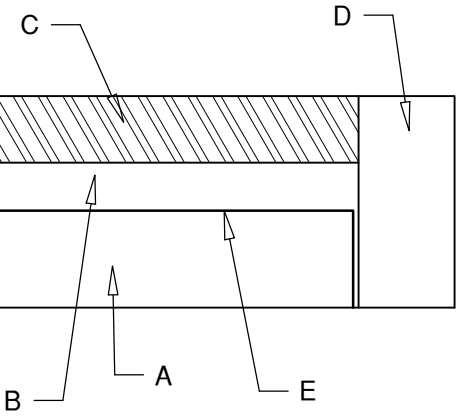

		DRIVEWAY/ ACCESSIBLE RAMP	URBAN SIDEWALK, URBAN H/C RAMP	ROADWAY/ COMMERCIAL D/W
A	BASE (SEE NOTE 4)	4"	4"	4" MIN CONC TREATED BASE
B	SAND LAYER (SEE NOTE 5)	1"	1"	1"
C	PAVER (HEIGHT) (SEE NOTE 6)	80 mm	60 mm	80 mm
D	EDGE RESTRAINT	4"x8" CONCRETE (SEE NOTE 2)	4"x8" CONCRETE (SEE NOTE 3)	DESIGN FOR ST W/ #4 REBAR
E	GEOTEXTILE (SEE NOTE 7)	YES	YES	YES

NOTES:

1. CONCRETE PAVERS FOR USE IN THE CENTRAL BUSINESS DISTRICT ONLY UNLESS OTHERWISE APPROVED BY THE CITY ENGINEER. COORDINATION REQUIRED WITH STREETS DEPT.
2. #4 LONGITUDAL REBAR REQUIRED AT DRIVEWAYS
3. WHERE SUPPORT IS PROVIDED BY BUILDING FOUNDATIONS, EDGE RESTRAINT IS NOT REQ'D #4 LONGITUDINAL REBAR REQ'D AT DRIVEWAYS
4. BASE MATERIAL TO BE CLASS "B" BACKFILL, THOROUGHLY COMPACTED TO 95% OF MAX DENSITY. AASHTO TEST, T99-74 METHOD "C"
5. SAND LAYER TO BE CLASS "C" BACKFILL. SAND TO BE SCREENED, WETTED, COMPACTED BY VIBRATORY PLATE COMPACTOR, THEN RE-SCREEDED WITH ADDITIONAL SAND ADDED TO LOW SPOTS, PRIOR TO PLACING PAVERS
6. PAVERS, INCLUDING EDGE PIECES ARE TO BE LAID TIGHTLY, THEN COMPACTED INTO PLACE WITH A VIBRATORY PLATE COMPACTOR
7. FIBRETEX GEO-TEXTILE FABRIC GRADE 150
8. PAVERS SHALL BE SMOOTH SURFACED, FLAT AND SHALL NOT CONTAIN BEVELED EDGES WHEN USED AS THE SURFACE MATERIAL ALONG AN ACCESSIBLE PEDESTRIAN ROUTE

DRAWN LJC	CITY OF BEND	CITY OF BEND	SCALE NTS
DIV ROADWAY		STANDARD DRAWING	DATE 12/1/17
REV 2 / DATE 12/1/17		710 NW WALL ST., BEND, OREGON 97701	APPR
	CITY OF BEND	CONCRETE PAVERS	STD DWG R-20

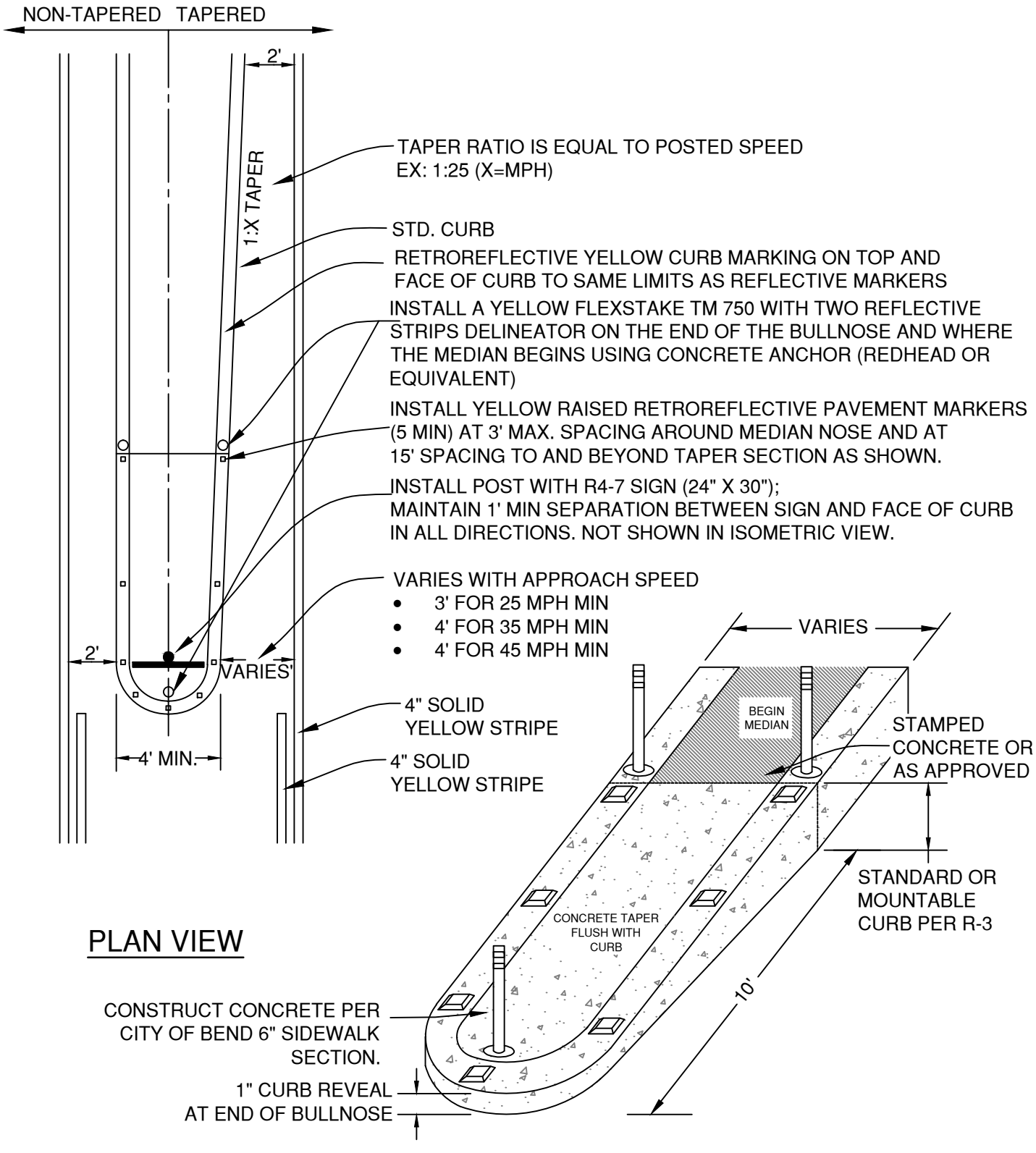

DRAWN LJC	CITY OF BEND	CITY OF BEND STANDARD DRAWING 710 NW WALL ST., BEND, OREGON 97701	SCALE NTS
DIV ROADWAY			DATE 3/31/19
REV | DATE			APPR
	CITY OF BEND	MEDIAN END DETAIL	STD DWG R-25

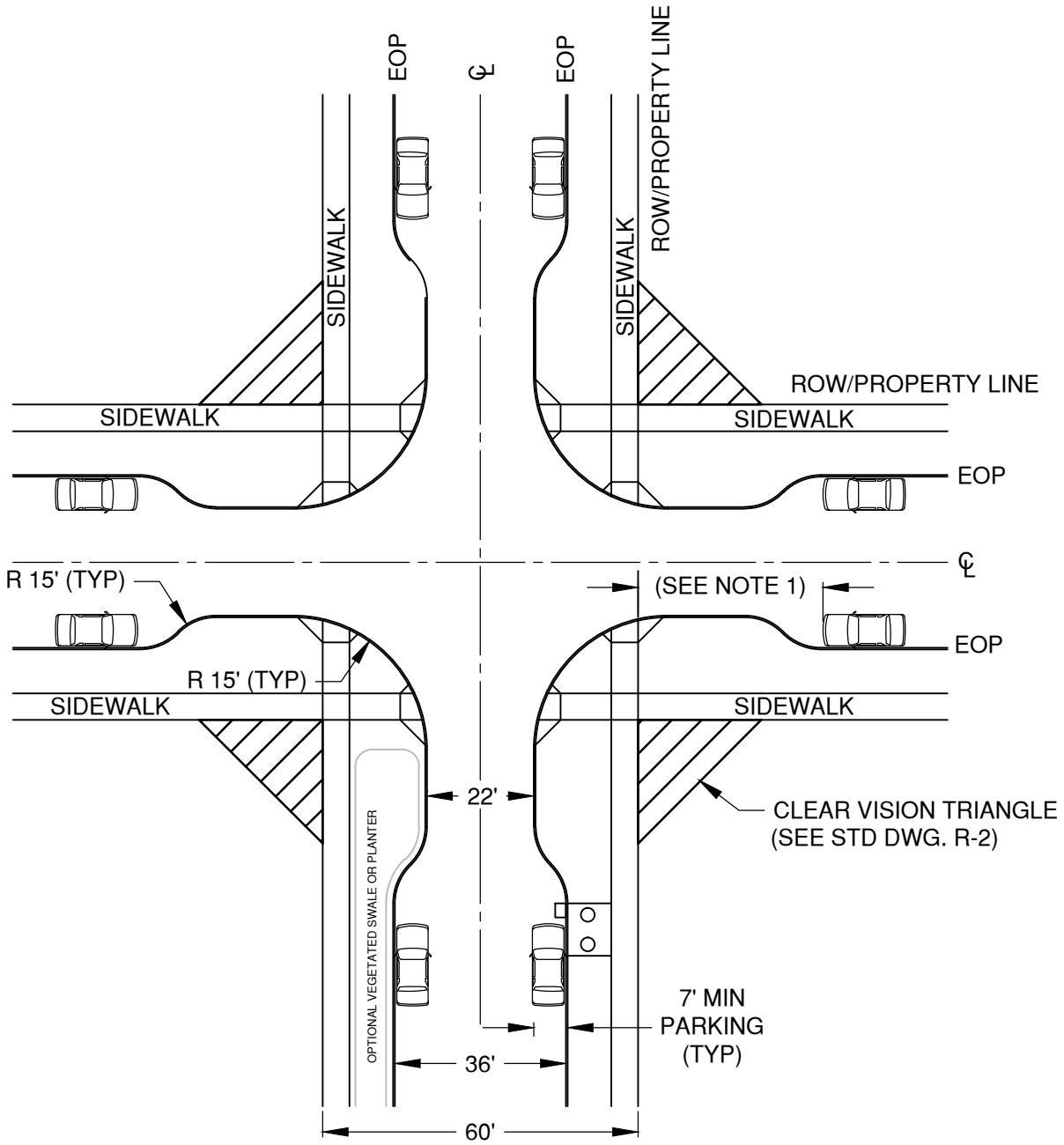

NOTES:

1. NO PARKING WITHIN 20' OF AN INTERSECTION
2. AS REQUIRED BY THE CITY ENGINEER, INSTALL YELLOW FLEXSTAKE TM 750 DELINEATOR FOR PLOW SIGNAGE AT CURB EXTENSIONS.
3. USE LOW GROWING VEGETATION FOR BIORETENTION SWALES/ PLANTERS LOCATED IN CURB EXTENSIONS.
4. CURB RETURNS TO BE CONSTRUCTED PER 3.5.1.2

DRAWN CJH	CITY OF BEND	CITY OF BEND	SCALE NTS
DIV ROADWAY		STANDARD DRAWING	DATE 3/31/19
REV DATE		710 NW WALL ST., BEND, OREGON 97701	APPR
		LOCAL STREET CURB EXTENSIONS	STD DWG R-26

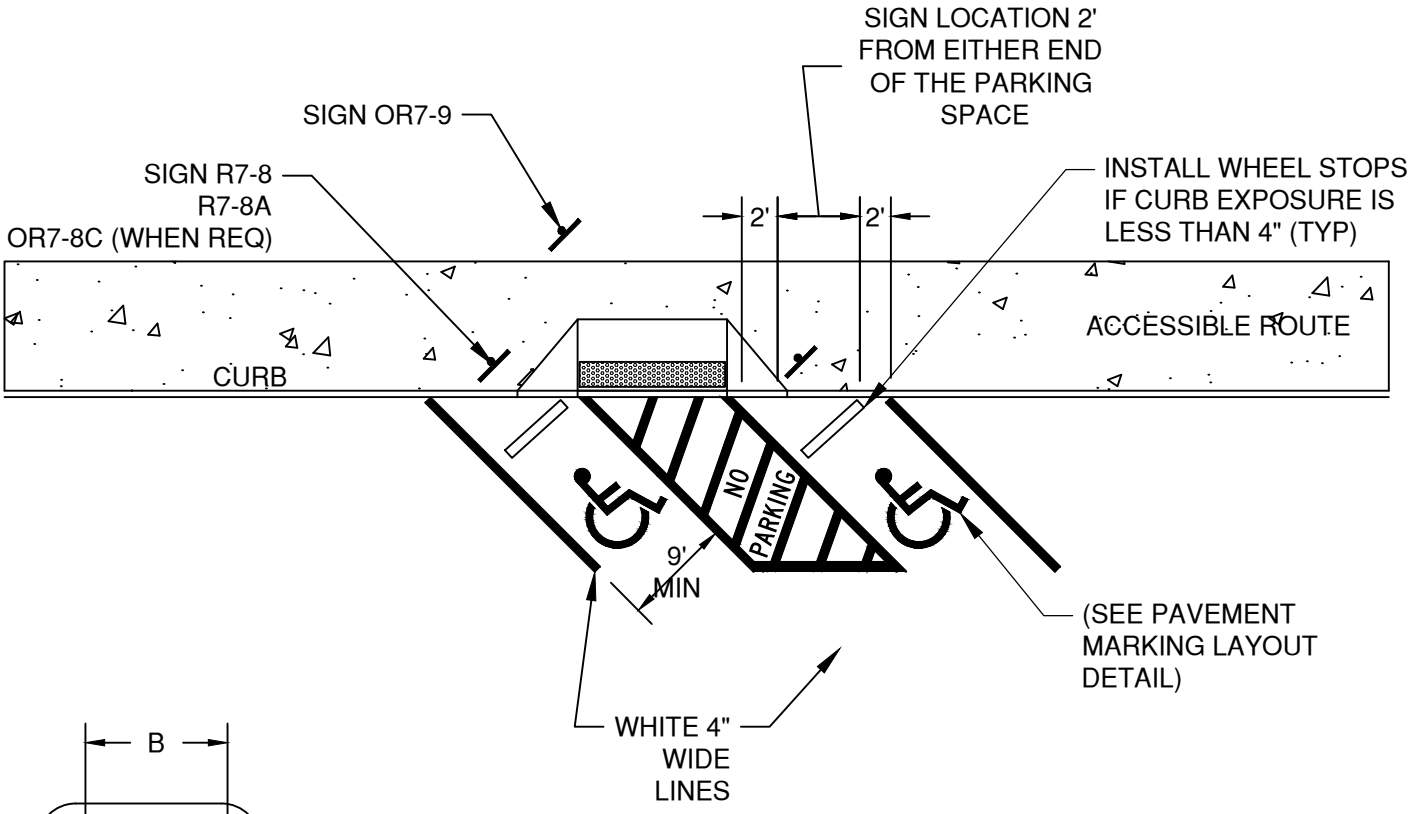

PLAN

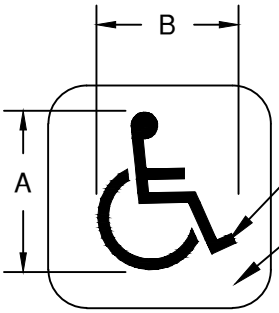

LEGEND	DIMENSIONS (INCHES)		
	A	B	C
MINIMUM	28	24	3
STANDARD	41	36	4

PAVEMENT MARKING LAYOUT

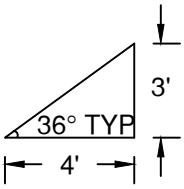

ACCESS AISLE ANGLE LAYOUT

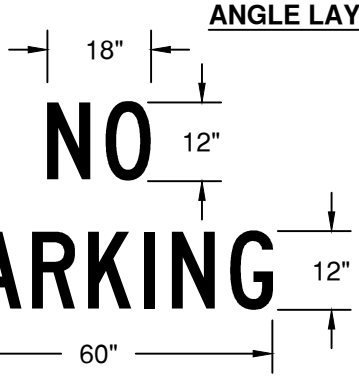

NOTE:

1. THIS IS ONE EXAMPLE OF AN ACCESSIBLE PARKING CONFIGURATION. REFER TO ODOT ACCESSIBLE PARKING STANDARDS FOR ADDITIONAL DETAILS AND OTHER CONFIGURATIONS.
2. ALL SIGNS AND PLACEMENT SHALL CONFORM TO ODOT STANDARDS.

DRAWN	CITY OF BEND	CITY OF BEND STANDARD DRAWING 710 NW WALL ST., BEND, OREGON 97701	SCALE NTS
DIV ROADWAY			DATE 3/31/19
REV / DATE			APPR
		ACCESSIBLE PARKING - ANGLE	STD DWG R-29

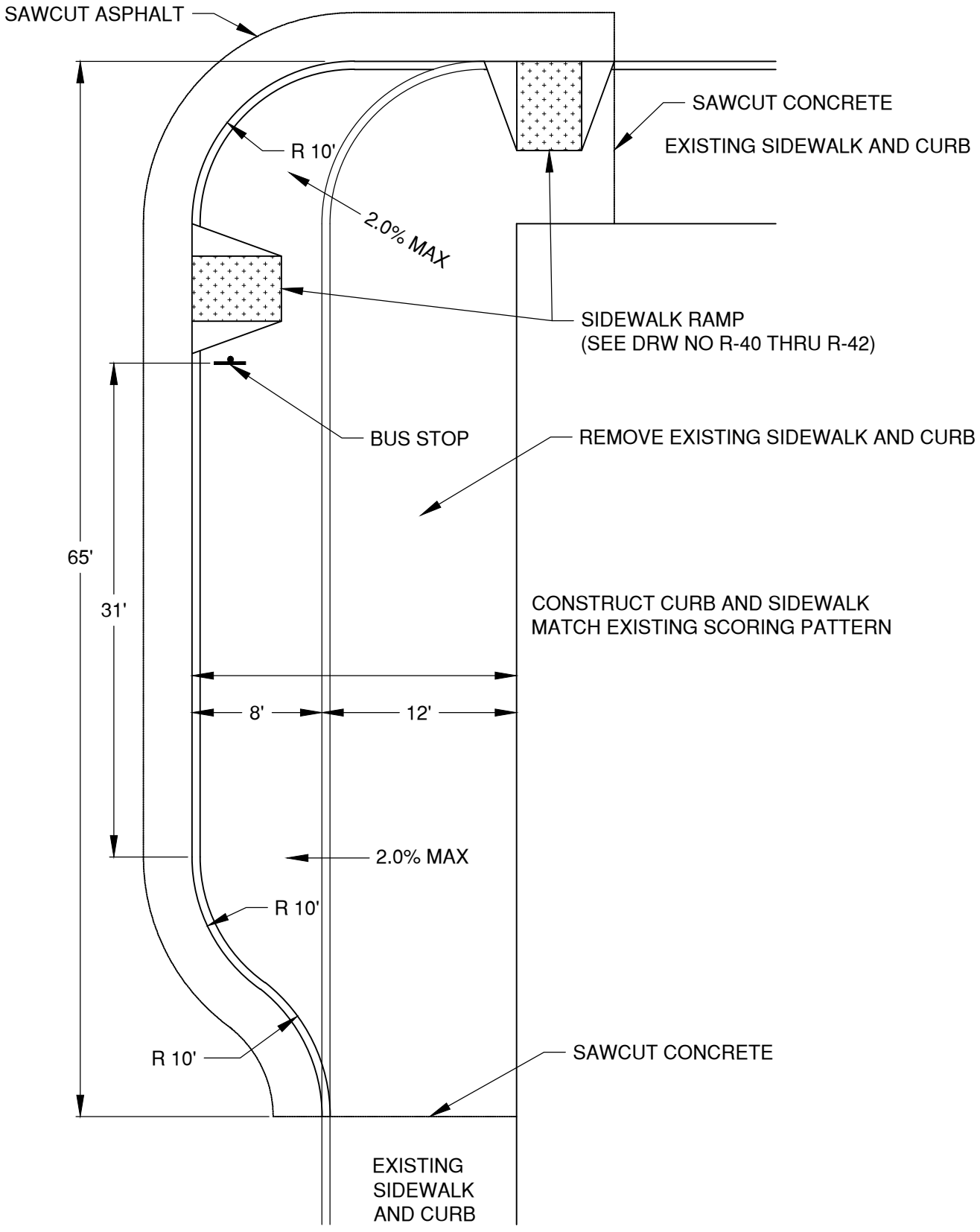

DRAWN	CITY OF BEND	CITY OF BEND	SCALE NTS
DIV ROADWAY		STANDARD DRAWING	DATE 12/1/17
REV DATE		710 NW WALL ST., BEND, OREGON 97701	APPR
		FULL CURB EXTENSION	STD DWG R-31

W



4" WHITE LINE

W-2



8" WHITE LINE

WB

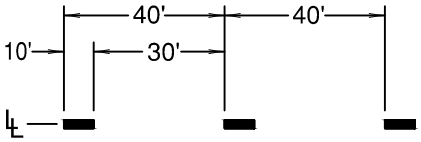

4" WHITE BROKEN LINE

YB

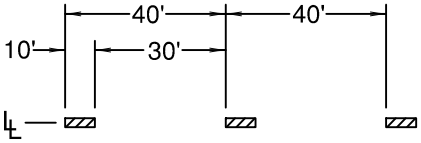

4" YELLOW BROKEN LINE

DLL-2

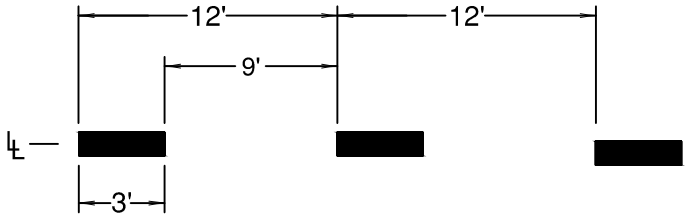

8" WHITE LANE DROP LINE

Y

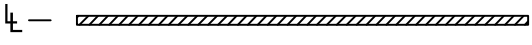

4" YELLOW LINE

S

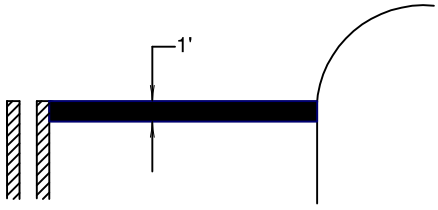

STOP BAR
1' WHITE BAR

INSTALL PER STANDARD DRAWING R-45
INSTALL AS TYPE B-HS PREFORMED THERMOPLASTIC
NOT REQUIRED AT LOCAL/LOCAL INTERSECTIONS
NOT REQUIRED IN FRONT OF MARKED CROSSWALKS

CW

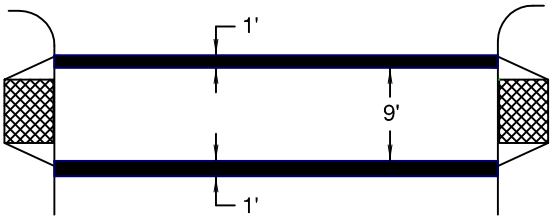

STANDARD CROSSWALK
TWO 1' WHITE BARS

INSTALL PER STANDARD DRAWING R-47
INSTALL AS TYPE B-HS PREFORMED THERMOPLASTIC
INSTALL AT CONTROLLED APPROACH

DRAWN CJH	CITY OF BEND	CITY OF BEND	SCALE NTS
DIV ROADWAY		STANDARD DRAWING	DATE 3/31/19
REV DATE		710 NW WALL ST., BEND, OREGON 97701	APPR
		PAVEMENT MARKINGS	STD DWG R-40

NDY

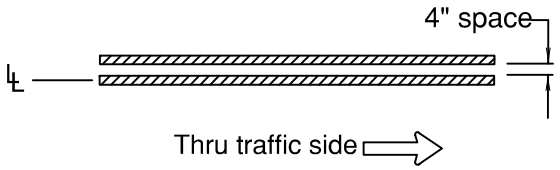

NARROW DOUBLE NO-PASS
TWO 4" YELLOW LINES

DY

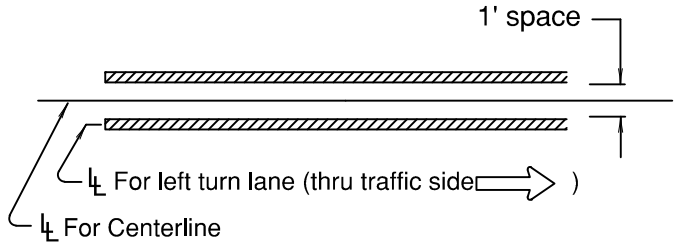

DOUBLE NO-PASS
TWO 4" YELLOW LINES

WD

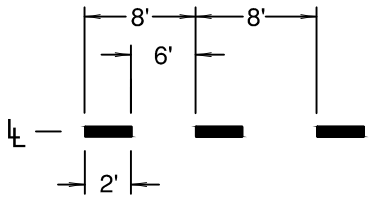

4" WHITE DOTTED LINE

For lane extensions

WD-2

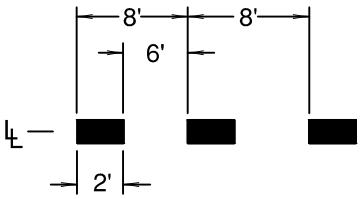

8" WHITE DOTTED LINE

For lane extensions and bike lane extensions

NPL

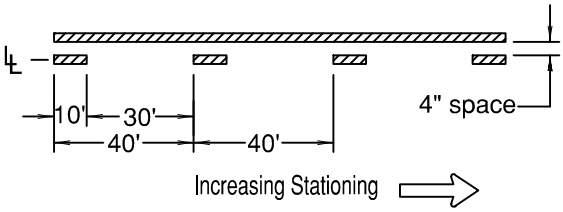

NO-PASS LEFT
4" YELLOW LINES

TWL

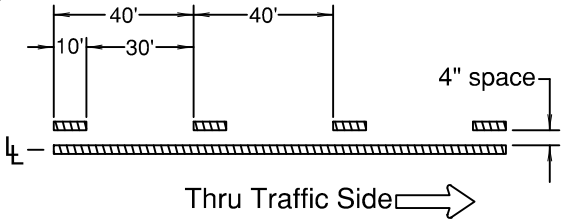

TWO-WAY LEFT TURN
4" YELLOW LINES

CW-SC

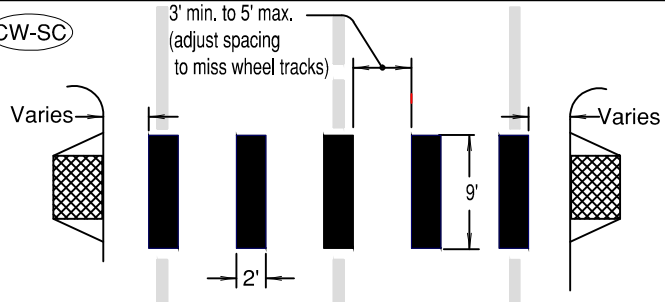

STAGGERED CONTINENTAL CROSSWALK
2' WHITE BARS

Install per Standard Drawing R-47; INSTALL AS TYPE B-HS PREFORMED THERMOPLASTIC; INSTALL AT UNCONTROLLED APPROACH

TM-(X)

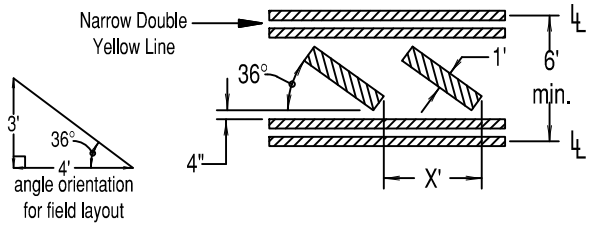

TRANSVERSE MEDIAN BARS
1' YELLOW BARS AT 20' SPACING

X = 20', Typical
(40' spacing may be used where median length exceeds 200')

DRAWN CJH	CITY OF BEND	CITY OF BEND	SCALE NTS
DIV ROADWAY		STANDARD DRAWING	DATE 3/31/19
REV DATE		710 NW WALL ST., BEND, OREGON 97701	APPR
		PAVEMENT MARKINGS	STD DWG R-41

P

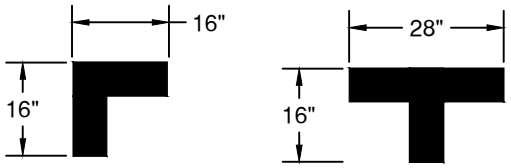

ON-STREET PARKING DETAIL (white)

PARKING STALL DESIGNATION REQUIRES CONFORMANCE TO PROWAG
Install in Type B - HS Preformed Thermoplastic or Methyl Methacrylate (MMA)

BS

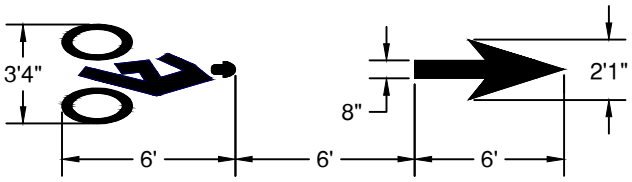

BIKE LANE STANDARD STENCIL (white)

Center marking within lane width
Install in Type B - HS Preformed Thermoplastic
For proportion details, see current version of FHWA Standard Highway Signs

YD

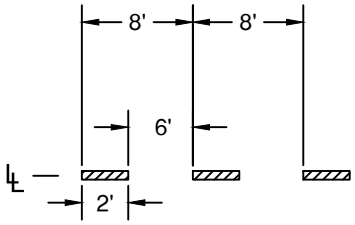

4" YELLOW DOTTED LINE

For lane extensions
Install in Paint

ON

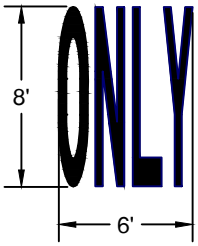

ONLY (white)

Center marking within lane width
Install in Type B - HS Preformed Thermoplastic
For letter proportion details, see current version of FHWA Standard Highway Signs

TS-(X)

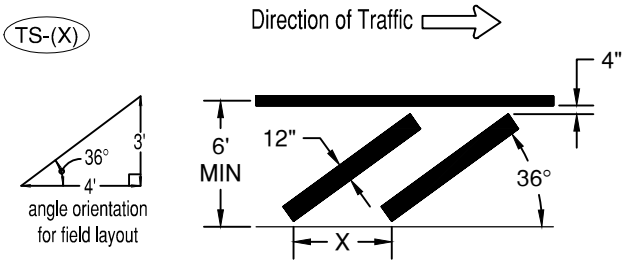

TRANSVERSE SHOULDER BARS
1' WHITE BARS AT 20' SPACING

X = 20', Typical
(40' spacing may be used where median length exceeds 200')
Install in Paint

SCH

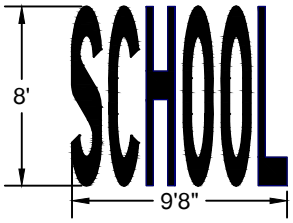

SCHOOL (white)

Center marking within lane width
Install in Type B - HS Preformed Thermoplastic
For letter proportion details, see current version of FHWA Standard Highway Signs
Install at school speed zone sign on arterial and collector roads

RMB

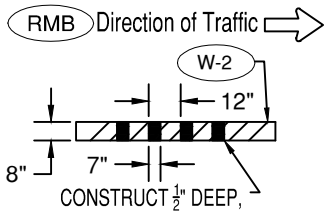

CONSTRUCT ½" DEEP, MILLED-IN EDGE LINE RUMBLE STRIP WHERE SHOWN ON THE PLANS. INSTALL PRIOR TO NEW PAINT APPLICATION.

8" RUMBLE STRIP

WD-2

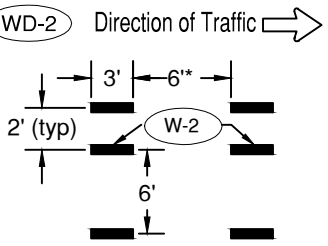

BIKE MARKING EXTENSION THROUGH INTERSECTION

* 6' or bike lane width
Install buffer stripes in Methyl Methacrylate (MMA)

BUF

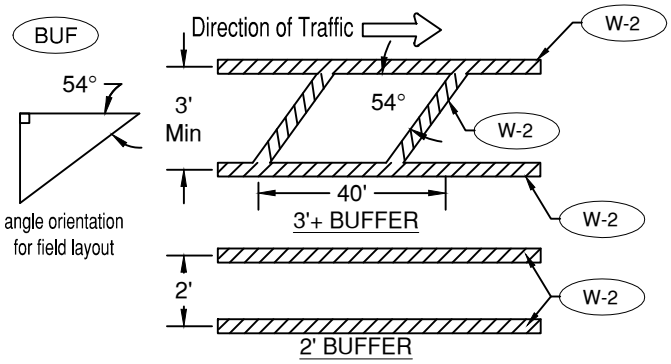

BUFFER STRIPE

Install buffer stripes in Methyl Methacrylate (MMA) / horizontal stripes parallel with traffic in paint

DRAWN CJH	CITY OF BEND	CITY OF BEND	SCALE NTS
DIV ROADWAY		STANDARD DRAWING	DATE 3/31/19
REV DATE		710 NW WALL ST., BEND, OREGON 97701	APPR
		PAVEMENT MARKINGS	STD DWG R-42

E-SA

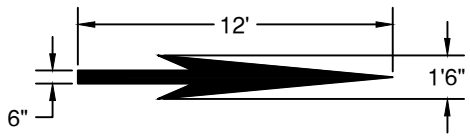

ELONGATED STRAIGHT ARROW (white)

For arrow proportion details, see current version of FHWA Standard Highway Signs
Install in Type B - HS Preformed Thermoplastic
Center marking within lane width

E-LA
E-RA

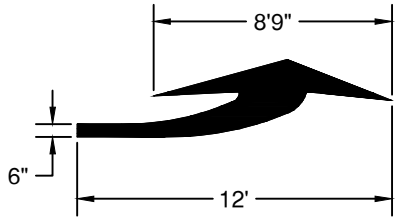

ELONGATED TURN ARROW (white)

For arrow proportion details, see current version of FHWA Standard Highway Signs
Install in Type B - HS Preformed Thermoplastic
Center marking within lane width
Use E-LA for Left Turn and E-RA for right turn.

E-LSA

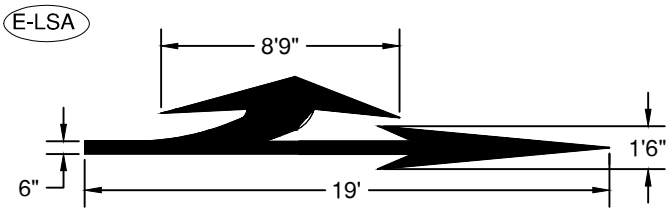

ELONGATED LEFT TURN STRAIGHT ARROW (white)

For arrow proportion details, see current version of FHWA Standard Highway Signs
Install in Type B - HS Preformed Thermoplastic
Center marking within lane width

E-RSA

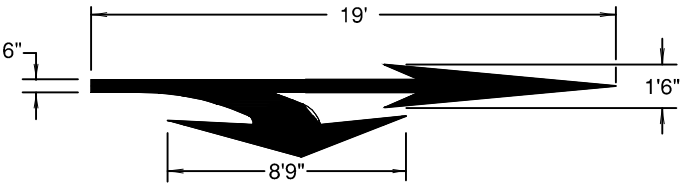

ELONGATED RIGHT TURN STRAIGHT ARROW (white)

For arrow proportion details, see current version of FHWA Standard Highway Signs
Install in Type B - HS Preformed Thermoplastic
Center marking within lane width

BD

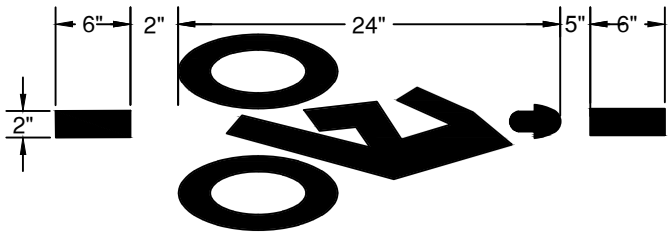

BIKE DETECTOR (WHITE)

Install in Type B - HS Preformed Thermoplastic
Center marking within lane width

B-SHW

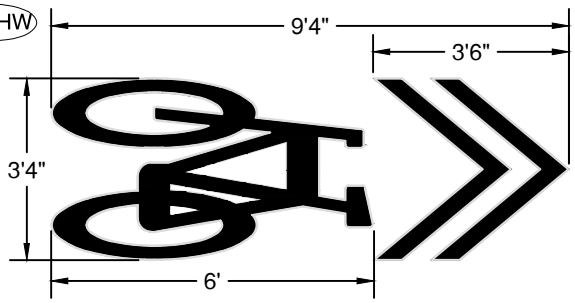

SHARROWS (WHITE)

Install in Type B - HS Preformed Thermoplastic
Center marking within lane width
Arrow may be turned in direction of travel.

SB

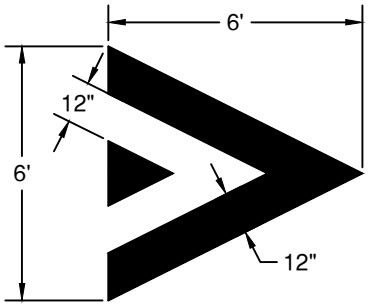

SPEED BUMP MARKING (WHITE)

Install in Type B - HS Preformed Thermoplastic
Center marking within lane width

BSS

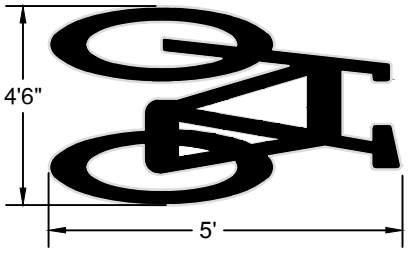

BIKE SYMBOL (WHITE)

Install in Type B - HS Preformed Thermoplastic
Center marking within lane width

DRAWN CJH	CITY OF BEND	CITY OF BEND	SCALE NTS
DIV ROADWAY		STANDARD DRAWING	DATE 3/31/19
REV DATE		710 NW WALL ST., BEND, OREGON 97701	APPR
		PAVEMENT MARKINGS	STD DWG R-43

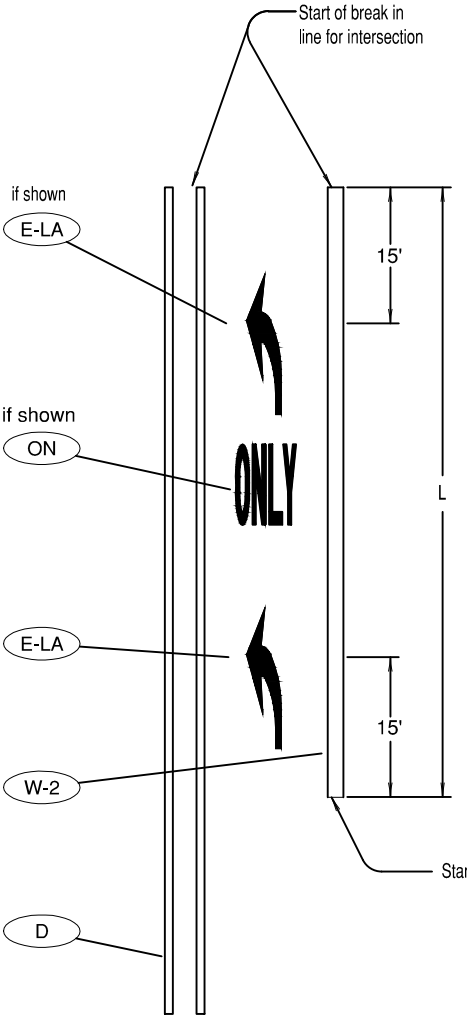

LANE USE ARROW PLACEMENT (L≤ 400')

DETAIL "A"

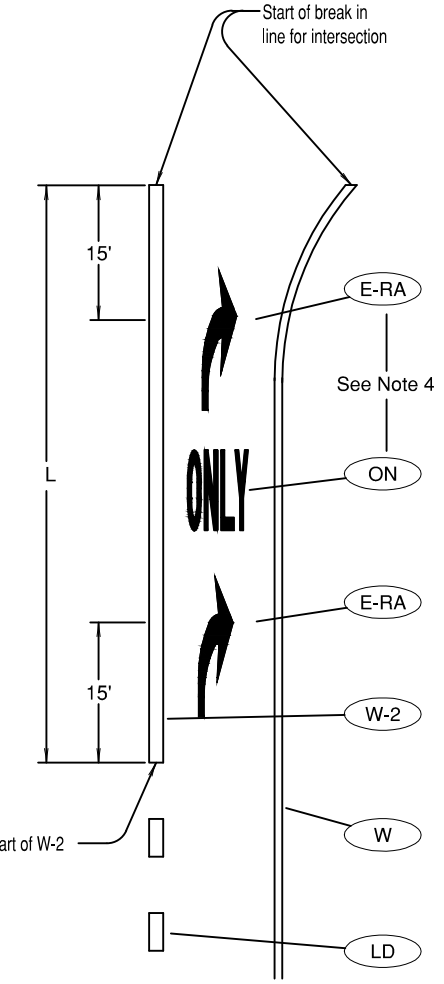

LANE USE ARROW PLACEMENT - TRAP LANE

DETAIL "B"

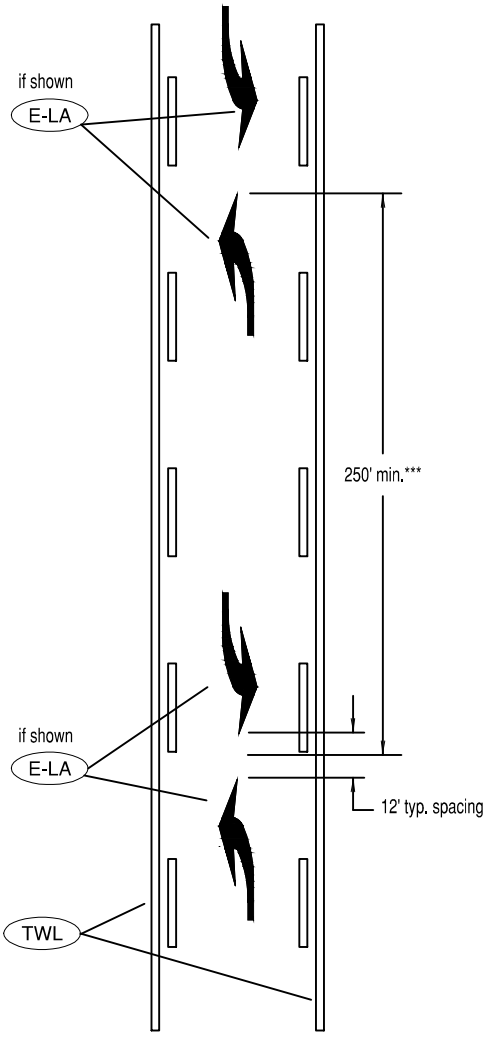

TWO-WAY LEFT TURN LANE ARROW MARKING PLACEMENT

DETAIL "C"

General Notes:

1.) Center pavement marking legends within the lane.

2.) Placement of lane use arrows with respect to the 8" wide white line (W-2) channelization shown in details "A", "B" and "C" apply to both left and right turn lanes.

3.) When used for a short turn lane (<40'), the 2nd (downstream) arrow may be omitted.

4.) An ONLY symbol is only required where a through lane approaching an intersection becomes a mandatory turn lane.

** When L is greater than 200', install 3rd lane use arrow at the midpoint of the turn lane.

To be accompanied by Standard Dwg. Nos. R-40 thru R-43

DRAWN CJH	CITY OF BEND	CITY OF BEND	SCALE NTS
DIV ROADWAY		STANDARD DRAWING	DATE 3/31/19
REV DATE		710 NW WALL ST., BEND, OREGON 97701	APPR
		TURN LANE MARKING LAYOUT	STD DWG R-44

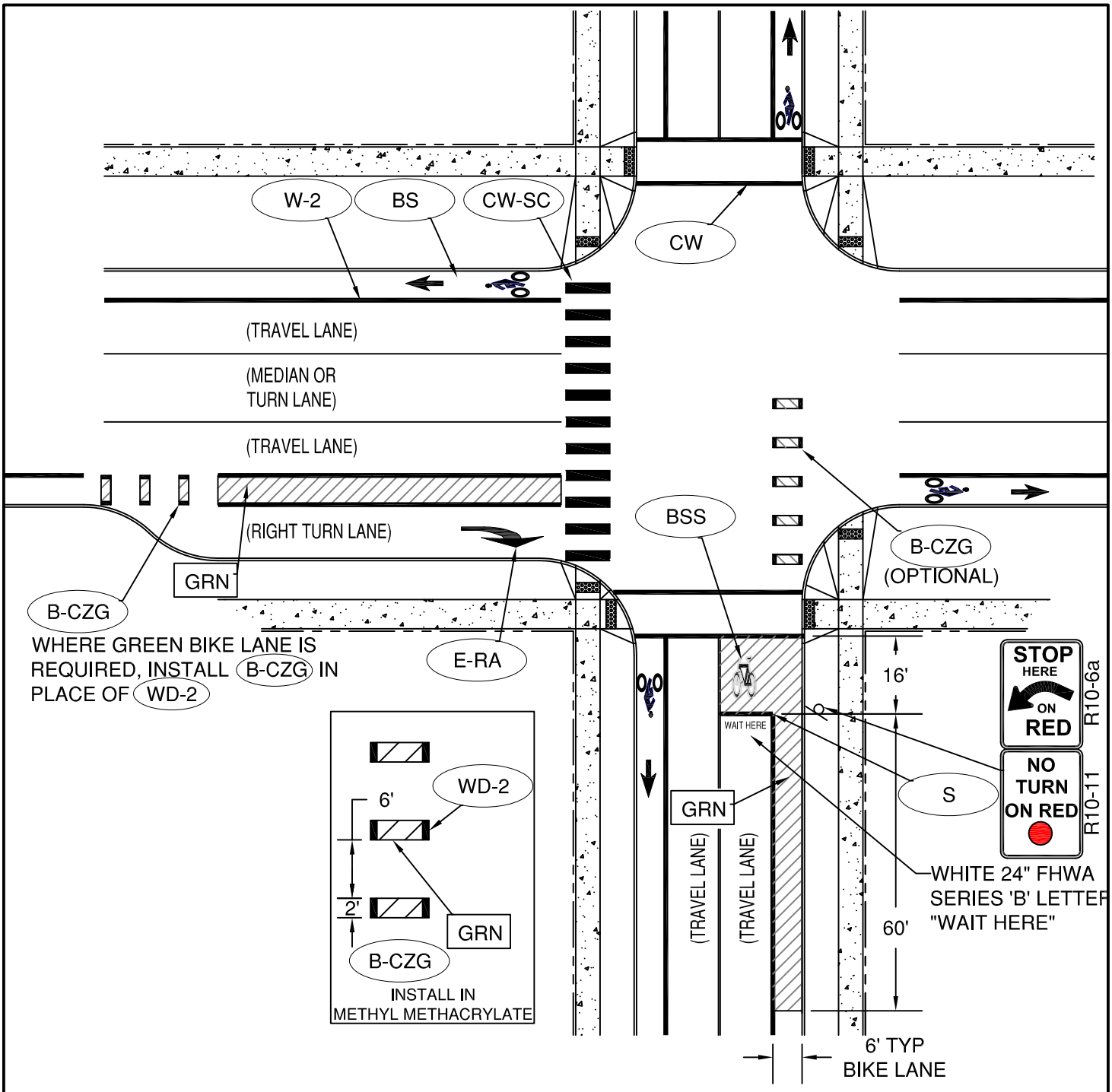

NOTES:

1. APPLICATION OF BIKE BOX AND GREEN PAINT INSTALLATION AS DIRECTED BY THE CITY ENGINEER.
2. B-CZG MARKINGS SHALL BE USED IN CONJUNCTION WITH GREEN METHYL METHACRYLATE INSTALLATION. USED TO DEFINE BIKE LANE ACROSS KEY VEHICLE CONFLICT AREAS AT RIGHT TURN LANES OR TO DELINEATE CONTINUATION OF BIKE LANE WITHIN CONFLICT AREAS.

DRAWN CJH	CITY OF BEND	CITY OF BEND	SCALE NTS
DIV ROADWAY		STANDARD DRAWING	DATE 12/16/17
REV DATE		710 NW WALL ST., BEND, OREGON 97701	APPR
		INTERSECTION BIKE SAFETY	STD DWG R-44A

* Stop bar shall be placed as near as possible to the intersecting traveled way. Locate stop bar 4' min. to 30' max. in advance of the extended fog line, edge of pavement, or curb face. Minimum stop bar distance may need to be increased, depending on location of pedestrian ramps (see Detail "A") and/or vehicle turn radii (see Detail "B"). Field verify sight distance and truck turning movements. Stop bar not required at local/local intersections.

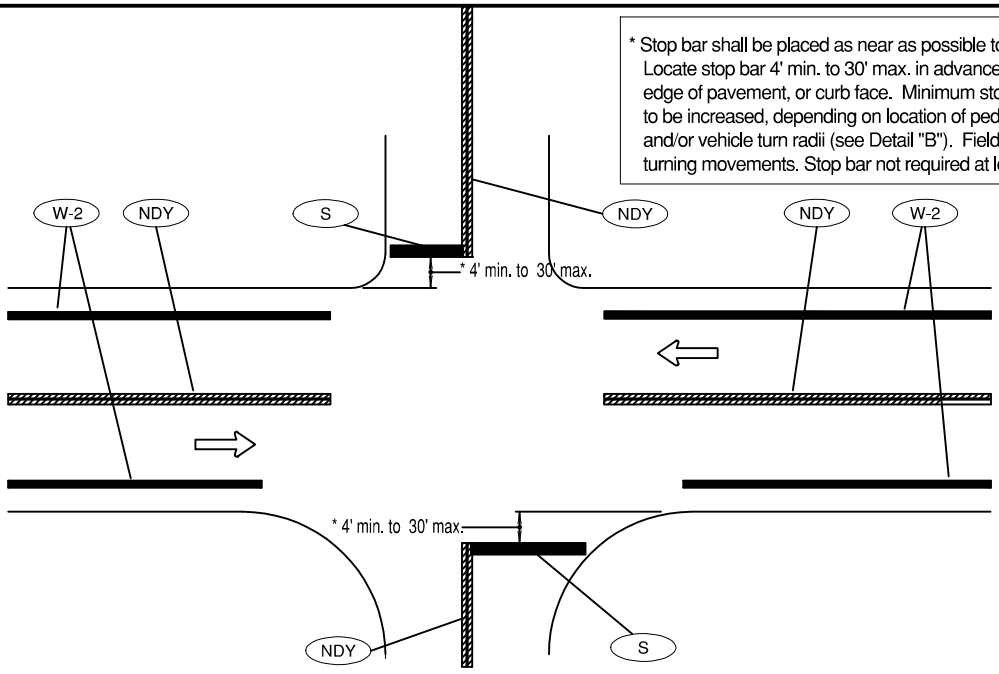

PAVEMENT MARKINGS FOR TYPICAL INTERSECTION

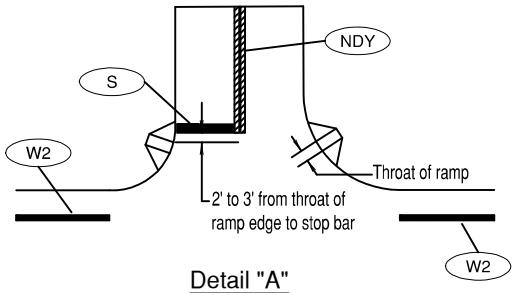

Detail "A"
STOP BAR PLACEMENT WITH
RESPECT TO PEDESTRIAN RAMPS

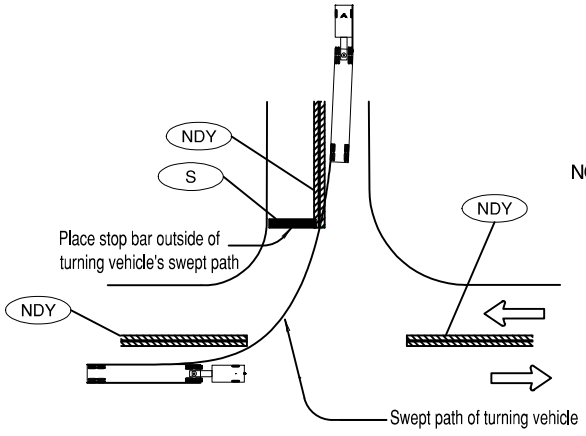

NOTE: Use W if <4' shoulder (no bike lane).
Use W-2 if a bike lane exists.

Detail "B"
STOP BAR PLACEMENT WITH
RESPECT TO TURN RADII

To be accompanied by Standard Dwg. Nos. R-40 thru R-43

DRAWN CJH	CITY OF BEND	CITY OF BEND STANDARD DRAWING 710 NW WALL ST., BEND, OREGON 97701	SCALE NTS
DIV ROADWAY			DATE 3/31/19
REV DATE			APPR
		INTERSECTION PAVEMENT MARKING LAYOUT	STD DWG R-45

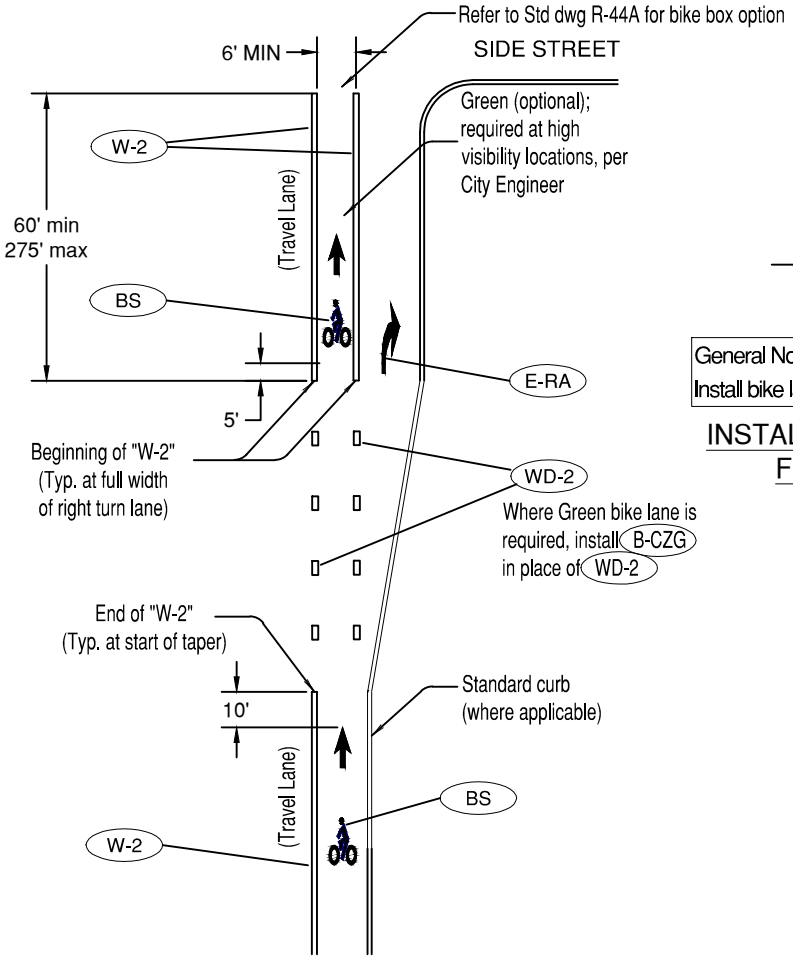

INSTALLATION OF BIKE LANE STENCILS
FOR BIKE LANE SEPARATED BY RIGHT TURN LANE

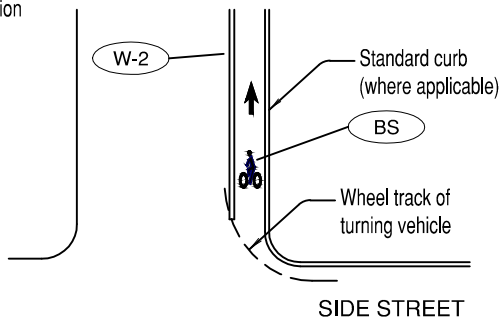

General Note:
Install bike lane stencil to avoid right turning vehicle wheel tracks.

INSTALLATION OF BIKE LANE STENCILS
FOLLOWING INTERSECTIONS

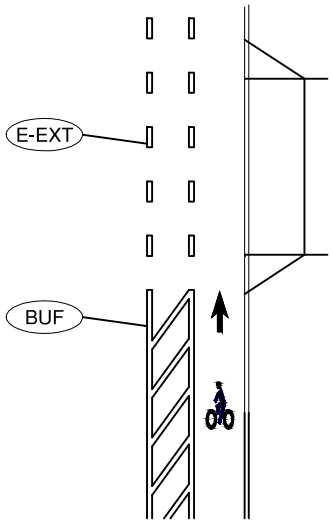

BUFFER BIKE LANE
IN CONFLICT AREA

To be accompanied by Standard Dwg. Nos. R-40 thru R-43 and R-44A

DRAWN CJH DIV ROADWAY REV DATE	CITY OF BEND	CITY OF BEND STANDARD DRAWING 710 NW WALL ST., BEND, OREGON 97701 BIKE LANE MARKINGS	SCALE NTS DATE 3/31/19 APPR STD DWG R-46

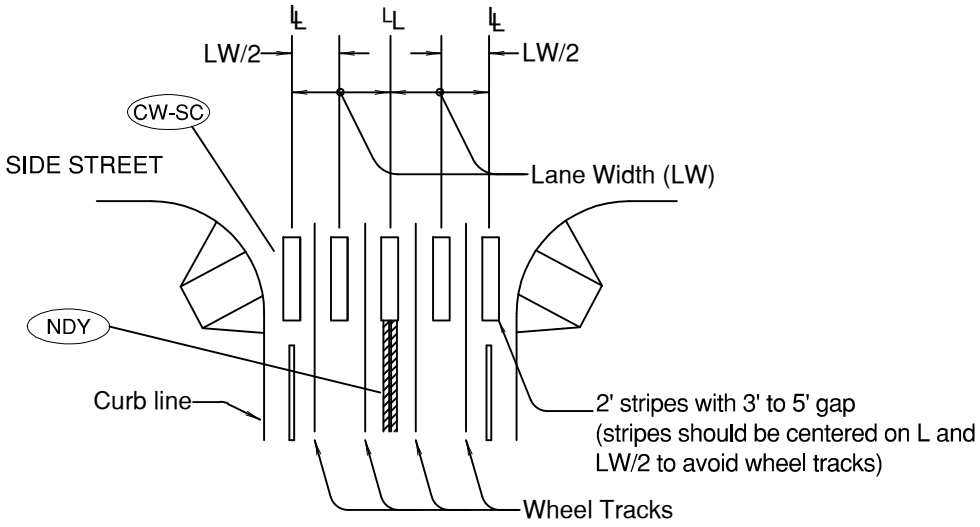

STAGGERED CONTINENTAL LAYOUT

General Note:

1. Install crosswalk bars such that the throat of the ADA ramp is entirely within crosswalk markings, or 5' back of extended fog line, edge of pavement, or curb face.

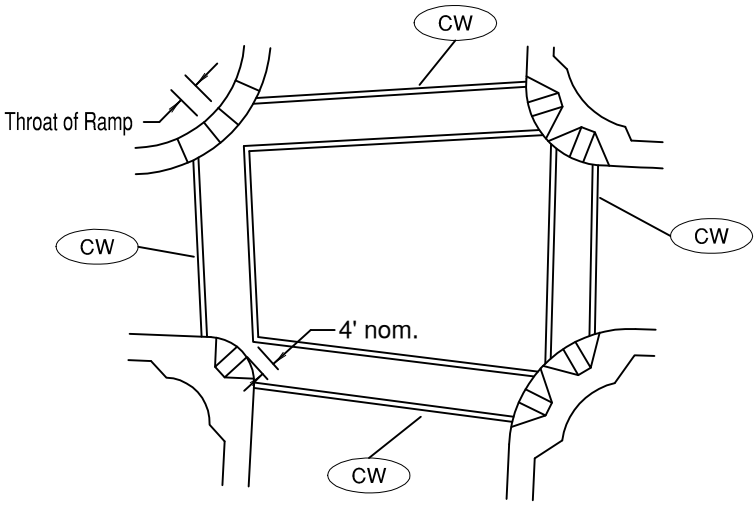

STANDARD CROSSWALK BARS AT 4-WAY CONTROLLED INTERSECTION

To be accompanied by Standard Dwg. Nos. R-40 thru R-43

DRAWN	CITY OF BEND	CITY OF BEND	SCALE NTS
DIV ROADWAY		STANDARD DRAWING	DATE 3/31/19
REV DATE		710 NW WALL ST., BEND, OREGON 97701	APPR
		CROSSWALK MARKINGS	STD DWG R-47

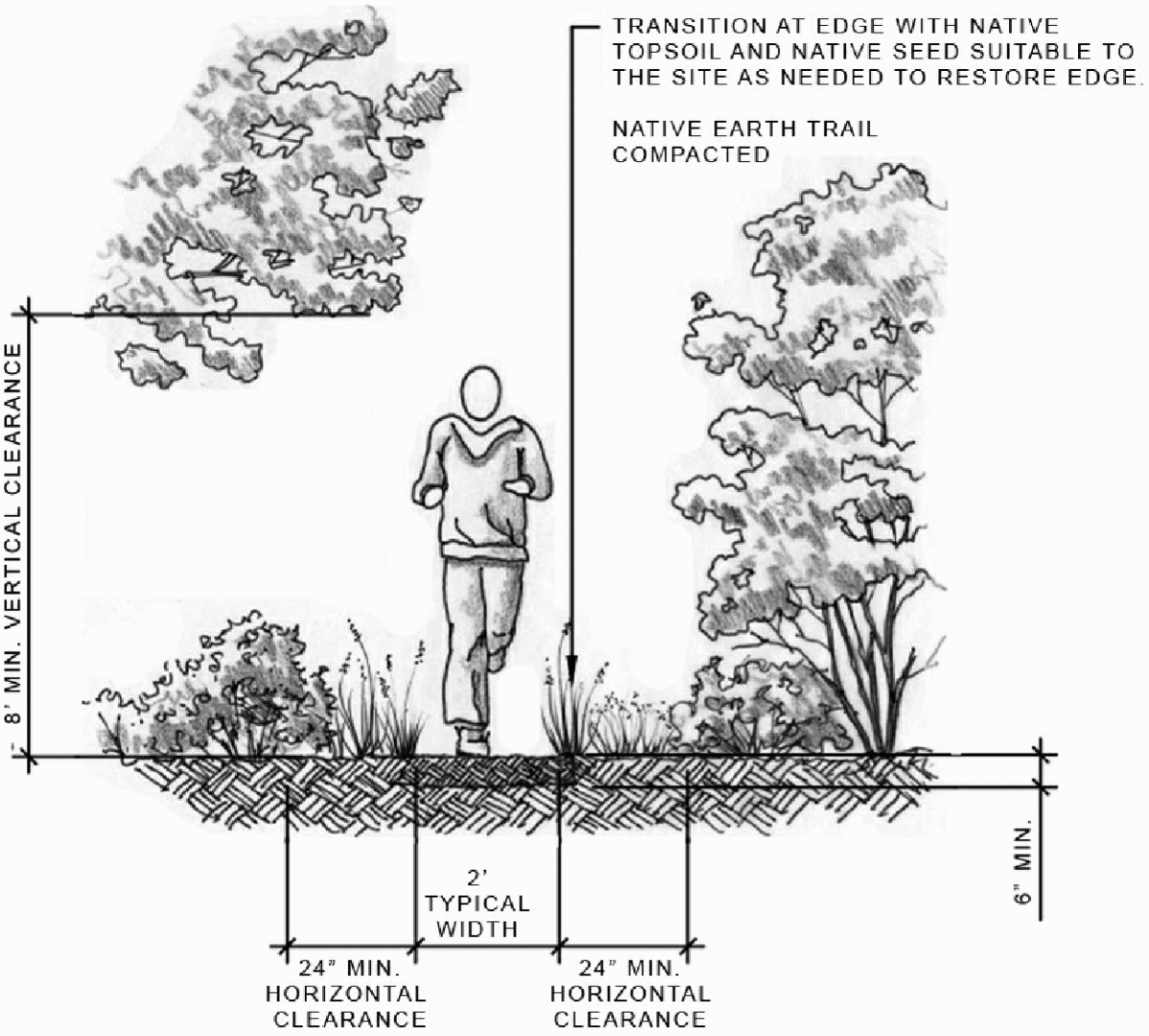

DRAWN	CITY OF BEND	CITY OF BEND STANDARDS AND SPECIFICATIONS 710 NW WALL ST., BEND, OREGON 97701	SCALE NTS
DIV ROADWAY			DATE 12/1/17
REV DATE			APPR
		SINGLE TRACK TRAIL - NATIVE EARTH	DRW NO R-48

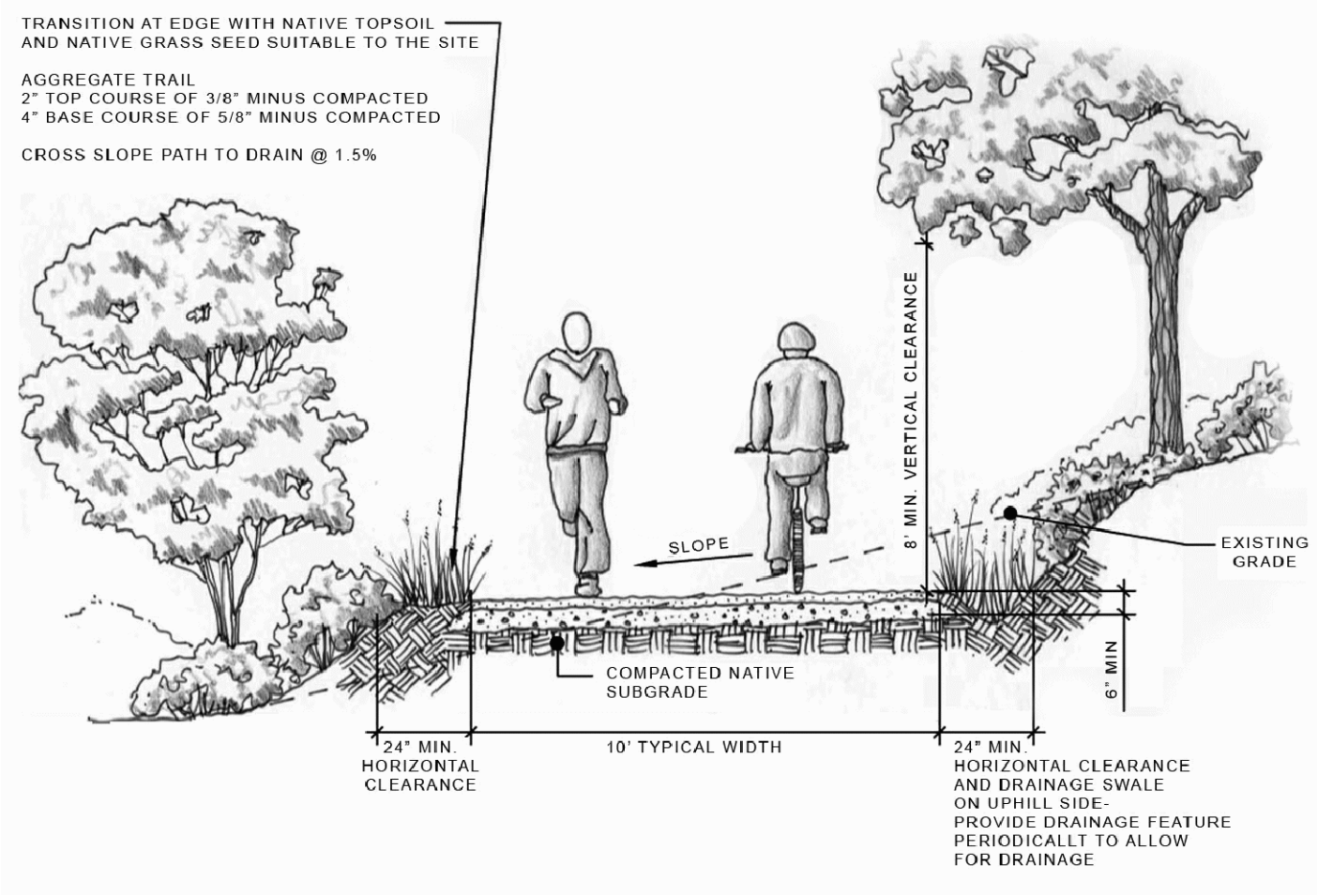

DRAWN LJC	CITY OF BEND	CITY OF BEND	SCALE NTS
DIV ROADWAY		STANDARD DRAWING	DATE 12/1/17
REV / DATE		710 NW WALL ST., BEND, OREGON 97701	APPR
		PRIMARY TRAIL - AGGREGATE	STD DWG R-49

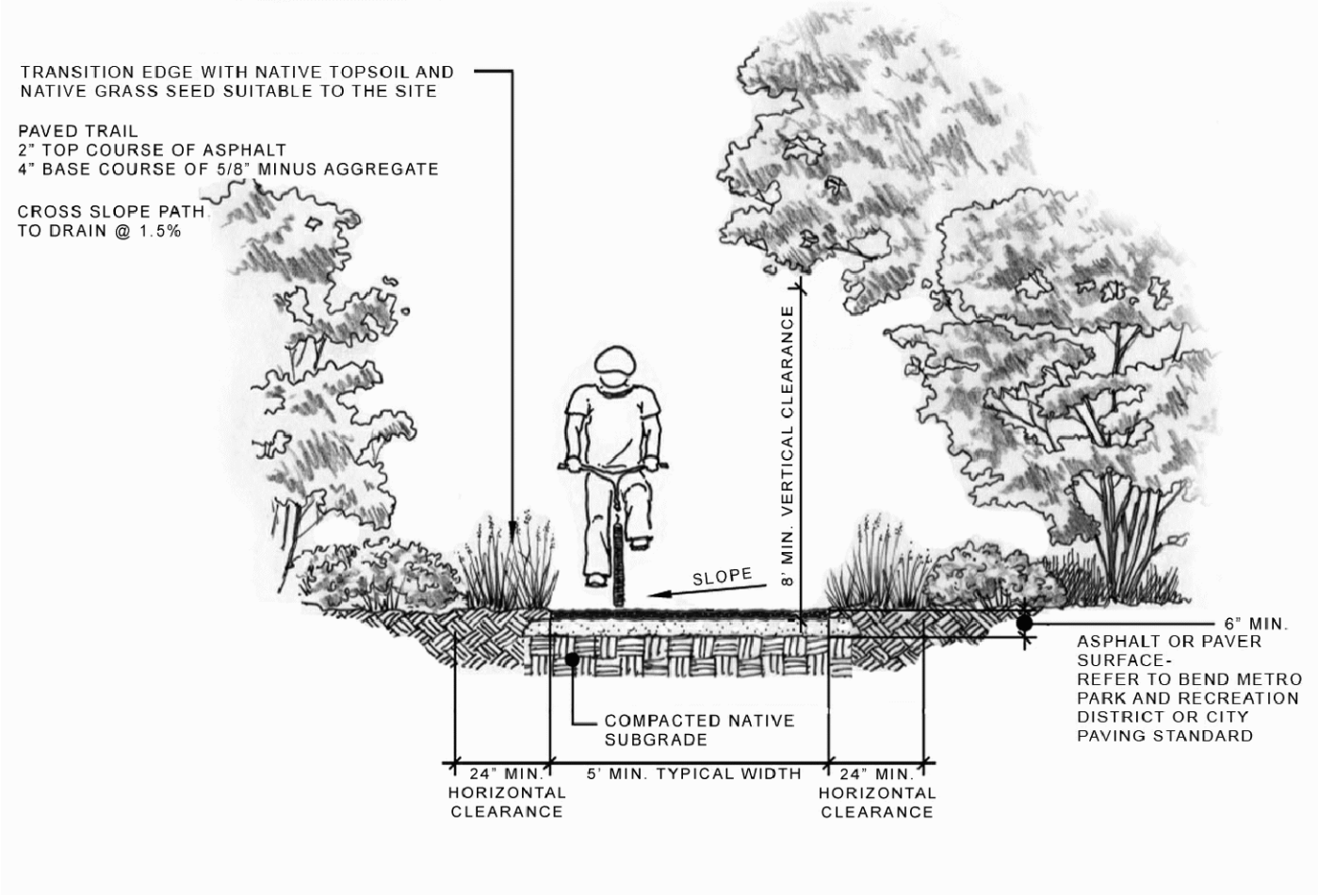

DRAWN LJC	CITY OF BEND	CITY OF BEND	SCALE NTS
DIV ROADWAY		STANDARD DRAWING	DATE 12/1/17
REV / DATE		710 NW WALL ST., BEND, OREGON 97701	APPR
		CONNECTOR TRAIL - PAVED	STD DWG R-50

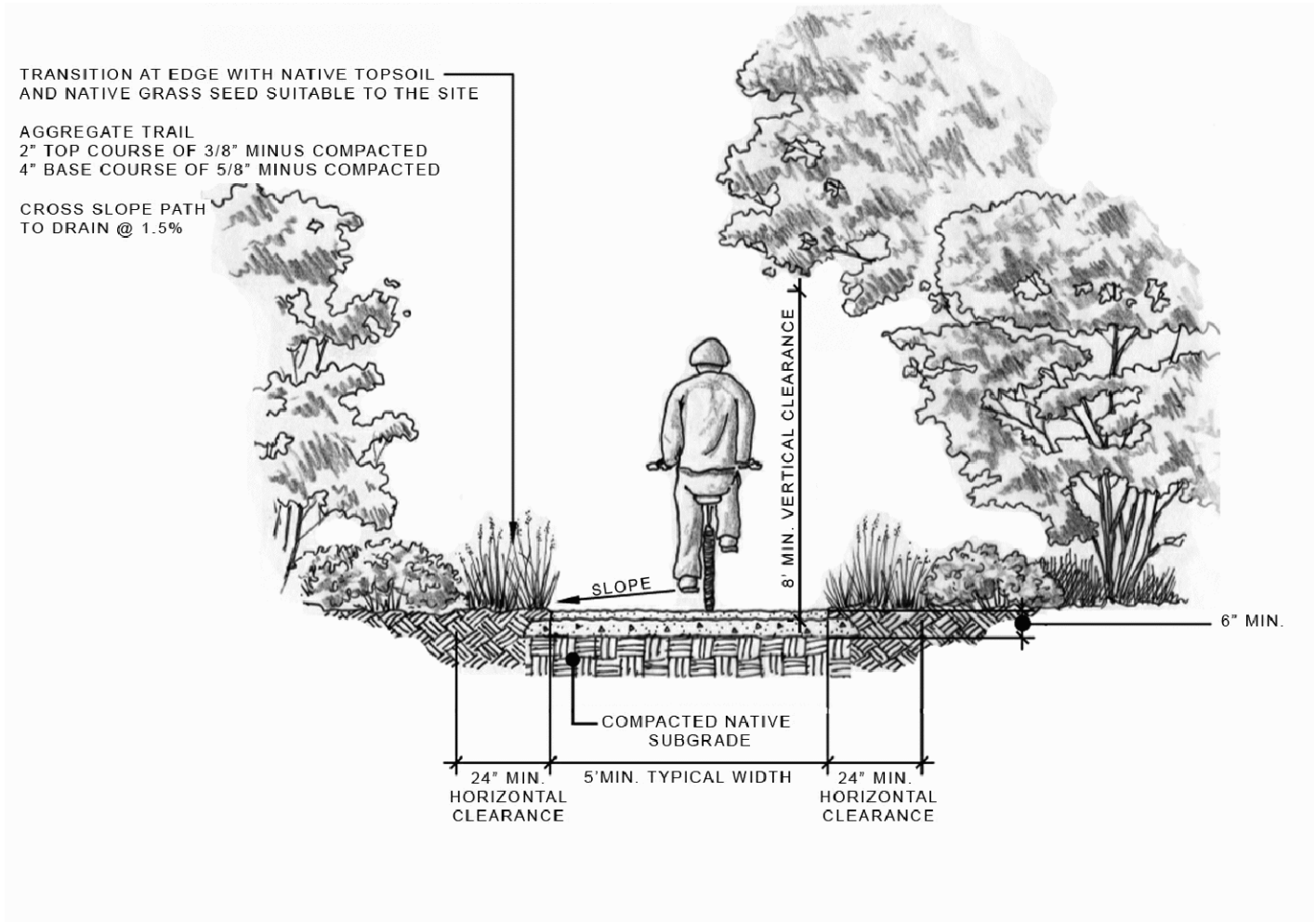

DRAWN LJC	CITY OF BEND	CITY OF BEND	SCALE NTS
DIV ROADWAY		STANDARD DRAWING	DATE 12/1/17
REV / DATE		710 NW WALL ST., BEND, OREGON 97701	APPR
		CONNECTOR TRAIL - AGGREGATE	STD DWG R-51

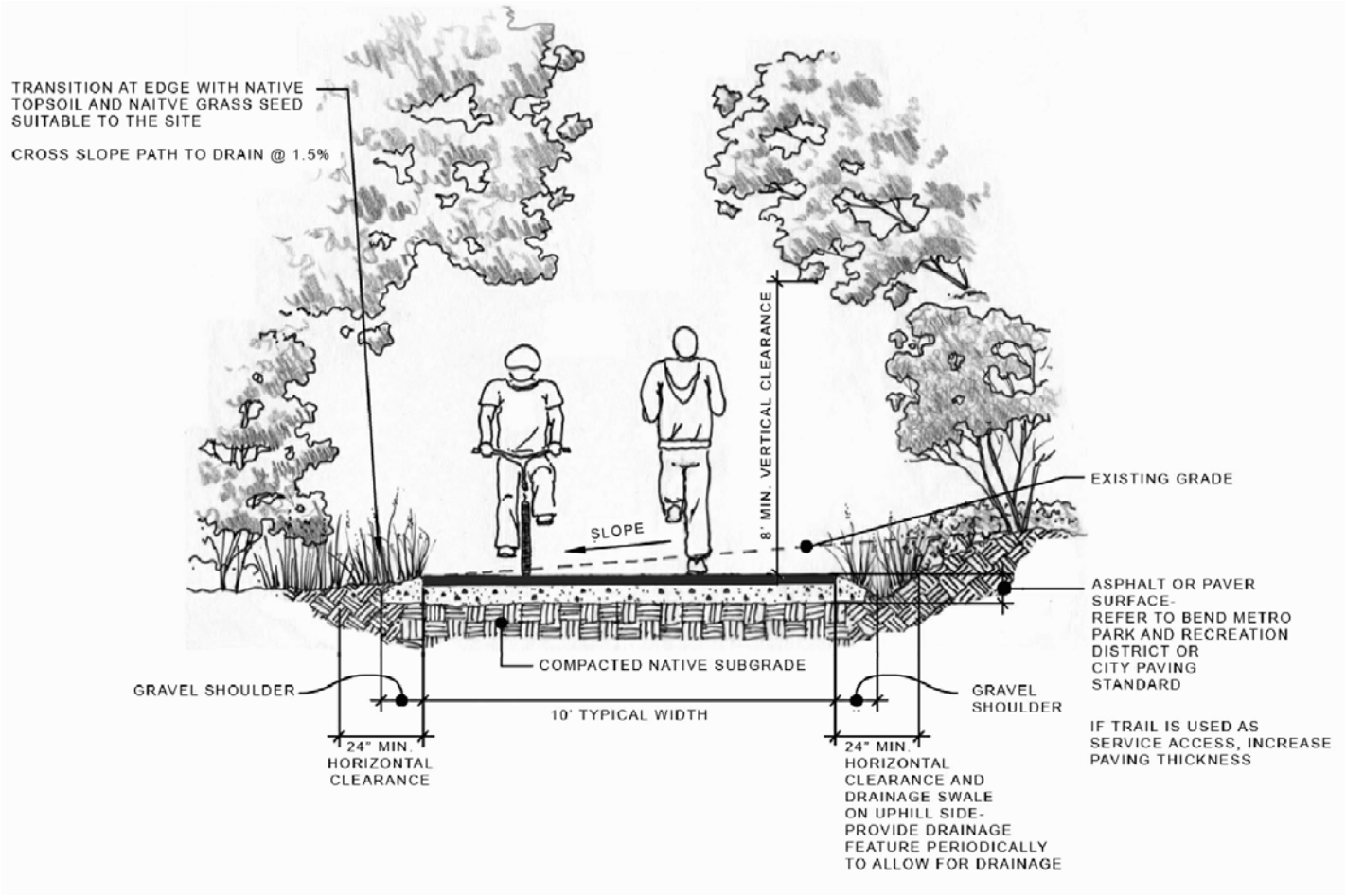

DRAWN LJC	CITY OF BEND	CITY OF BEND	SCALE NTS
DIV ROADWAY		STANDARD DRAWING	DATE 12/1/17
REV DATE		710 NW WALL ST., BEND, OREGON 97701	APPR
		PRIMARY TRAIL - PAVED	STD DWG R-52

CITY OF BEND STANDARD DRAWINGS

Sanitary (S)

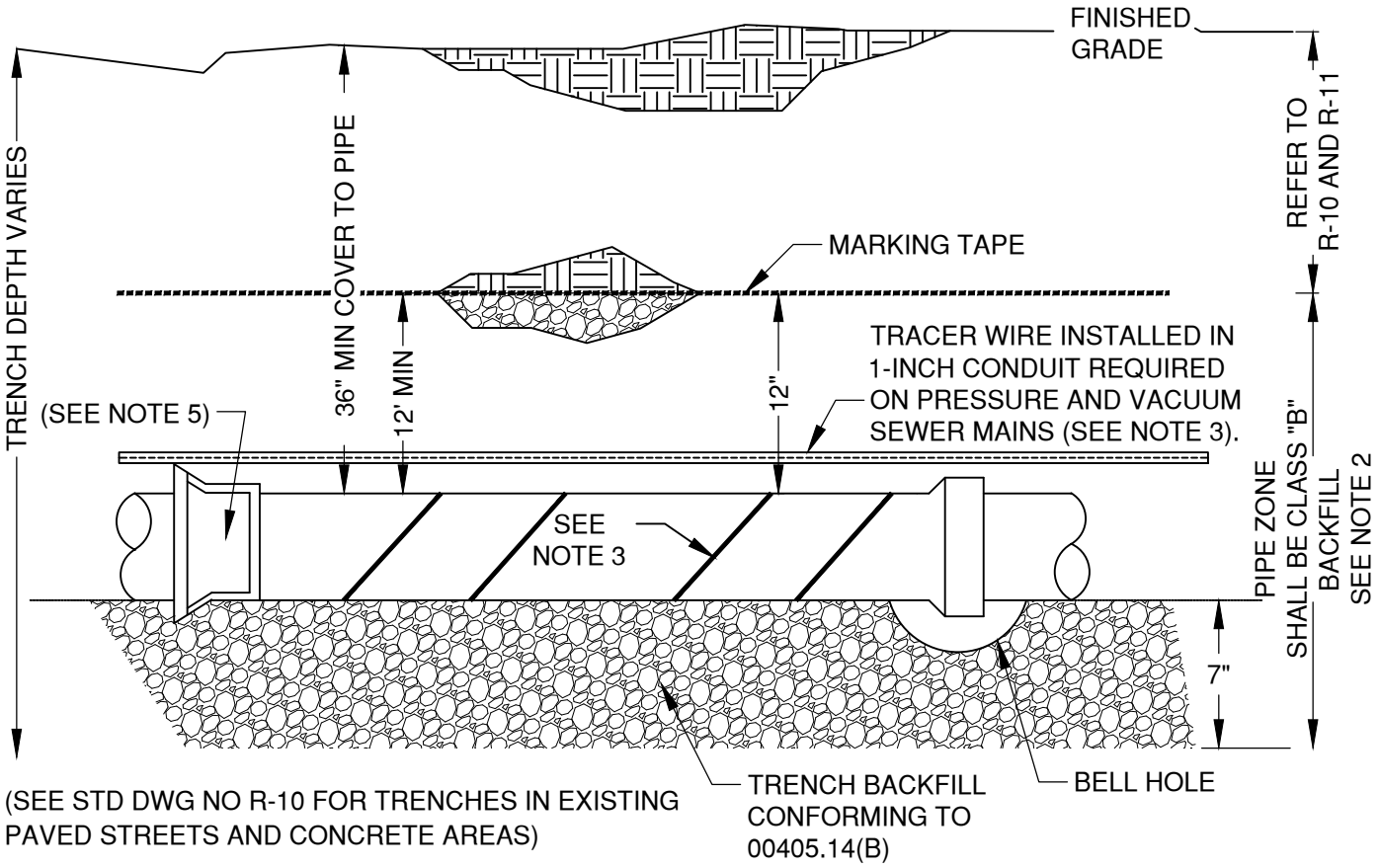

(SEE STD DWG NO R-10 FOR TRENCHES IN EXISTING PAVED STREETS AND CONCRETE AREAS)

NOTES:

1. SCREENED MAX 3" MINUS BACKFILL PER R-10 OR R-11, MECHANICALLY COMPACTED TO 95.0% OF AASHTO T-99-74. BACKFILL SHALL BE CAREFULLY AND THOROUGHLY TAMPED IN LAYERS.
2. PIPE ZONE BACKFILL MATERIAL PIPE SHALL BE COMPACTED IN LAYERS NOT EXCEEDING 6". ALL PIPE ZONE MATERIAL SHALL BE $\frac{3}{4}$" MINUS ROCK CONFORMING TO OSS SPECIFICATIONS 00405.00 AND 02630.10.
3. FOR PRESSURE AND VACUUM SEWER MAINS ONLY, TRACER WIRE SHALL BE INSTALLED WITHIN A 1-INCH CONDUIT CENTERED ON TOP OF THE MAIN, AS CLOSE TO THE MAIN AS POSSIBLE. THE MAIN SHALL BE WRAPPED WITH MARKING TAPE A MIN OF 4 WRAPS PER 20 FEET OF MAIN. TRACER WIRE IS NOT REQUIRED ON GRAVITY SEWER MAIN.
4. PLACE TRACER WIRE ON GRAVITY, PRESSURE, AND VACUUM SEWER SERVICES PER SECTION 00445.11 (e) and 00445.48.
5. TRANSITION FITTING SHALL BE A HARD COUPLER WHERE CHANGING FROM ASTM 3034 OR ASTM F679 PIPE TO C-900 OR C905 PIPE
6. WHEN A SEWER LINE IS LOCATED ABOVE OR WITHIN 18" BELOW A WATERLINE, THE SEWER SHALL BE CONSTRUCTED WITH A MIN OF 20 LF OF AWWA C900 OR C905 PIPE CENTERED OVER THE WATERLINE PER OAR 333-061-0050 (9) AND BE APPROVED BY CITY/STATE.
7. WHEN INSTALLING A WATER LINE THAT CROSSES BELOW OR WITHIN 18 INCHES ABOVE AN EXISTING SEWER LINE, FOLLOW OAR 333-061-0050(9).

DRAWN LJC DIV SANITARY REV DATE	CITY OF BEND	CITY OF BEND STANDARD DRAWING 710 NW WALL ST., BEND, OREGON 97701 PROFILE OF TYPICAL SEWER MAIN INSTALLATION	SCALE NTS DATE 3/31/19 APPR STD DWG S-1

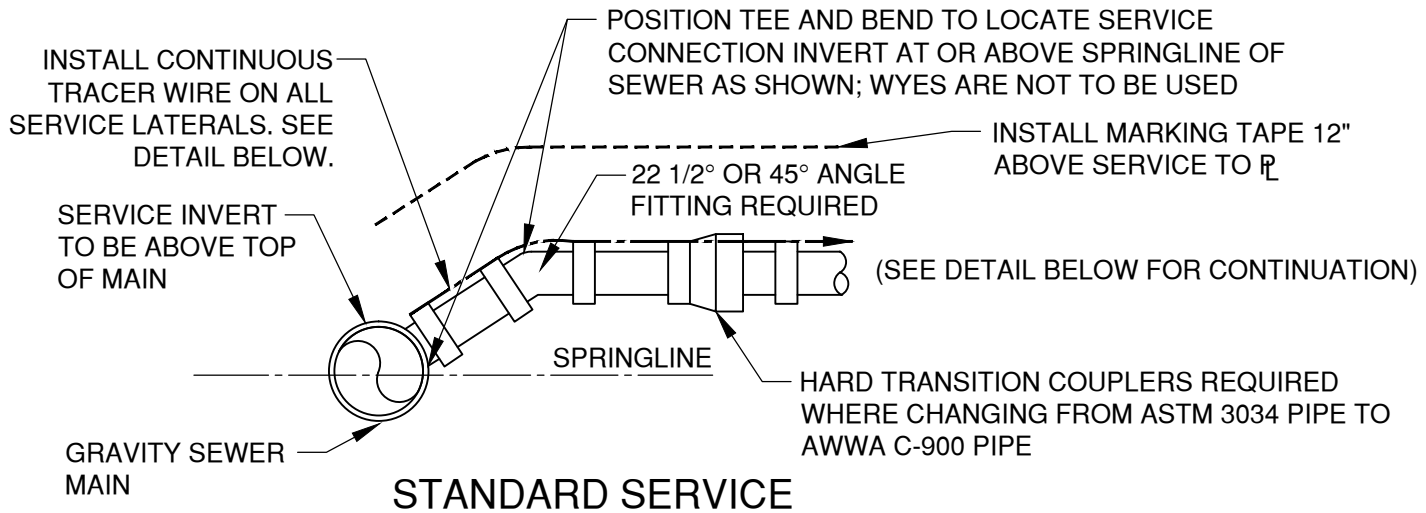

STANDARD SERVICE

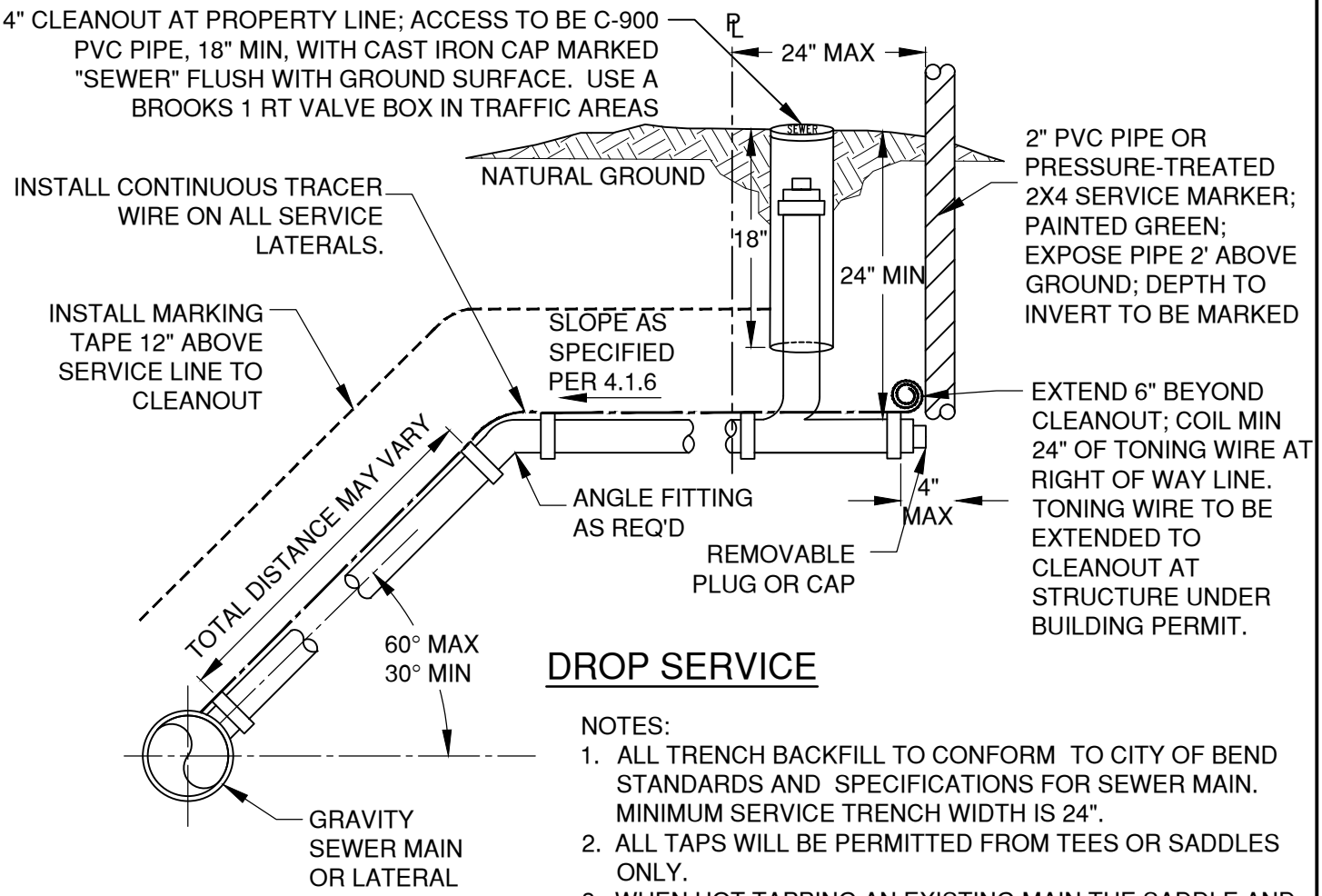

DROP SERVICE

NOTES:

1. ALL TRENCH BACKFILL TO CONFORM TO CITY OF BEND STANDARDS AND SPECIFICATIONS FOR SEWER MAIN. MINIMUM SERVICE TRENCH WIDTH IS 24".
2. ALL TAPS WILL BE PERMITTED FROM TEES OR SADDLES ONLY.
3. WHEN HOT TAPPING AN EXISTING MAIN THE SADDLE AND TEE METHOD SHALL BE USED.
4. TRACER WIRE REQUIRED ON ALL SEWER SERVICES.
5. SEWER CONNECTION FROM THE PROPERTY LINE/ROW LINE TO THE CLEAN OUT NEAR THE BUILDING FOUNDATION REQUIRES A PLUMBING PERMIT.

DRAWN LJC	CITY OF BEND	CITY OF BEND	SCALE NTS
DIV SANITARY		STANDARD DRAWING	DATE 3/31/19
REV DATE		710 NW WALL ST., BEND, OREGON 97701	APPR
		GRAVITY SEWER SERVICES	STD DWG S-2

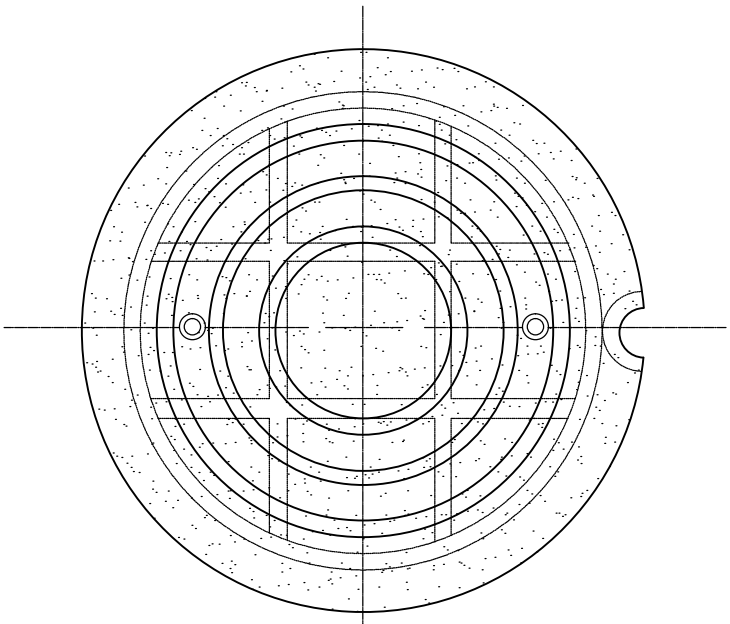



SEWER MANHOLE LID DETAIL
NTS

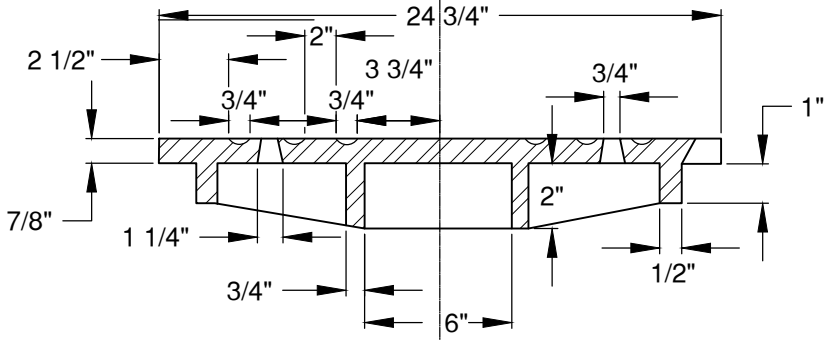

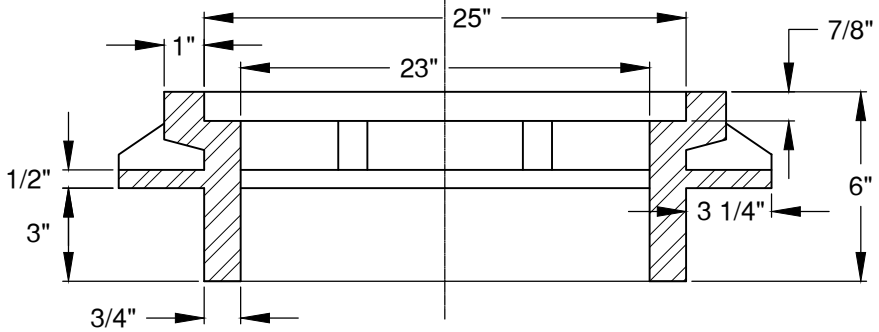

NOTES:
1. CITY SANITARY SEWER MANHOLE COVERS SHALL HAVE THE WORD "SEWER" CAST IN 2" RAISED LETTERS.
2. PRIVATE MANHOLE LIDS SHOULD NOT USE THE CITY OF BEND MANHOLE LID DETAIL.
3. HINGED MANHOLE LIDS ARE NOT PERMITTED UNLESS OTHERWISE APPROVED BY THE CITY ENGINEER.
4. LOCKS ARE TO BE USED ON THE LID WHEN THE LID IS LOCATED OUTSIDE A ROADWAY IF REQUIRED BY THE CITY ENGINEER. IF A LOCK IS REQUIRED, THE LOCK SHALL BE TITUS SWIFTTWIST, OR EQUAL.
5. MANHOLE LIDS SHALL BE PLACED OUTSIDE THE PATH OF TRAVEL ON SIDEWALKS AND DRIVEWAY APRONS.

DRAWN LJC	CITY OF BEND	CITY OF BEND	SCALE NTS
DIV SANITARY		STANDARD DRAWING	DATE 3/31/19
REV / DATE		710 NW WALL ST., BEND, OREGON 97701	APPR
		STANDARD SEWER MANHOLE RING & COVER	STD DWG S-3A

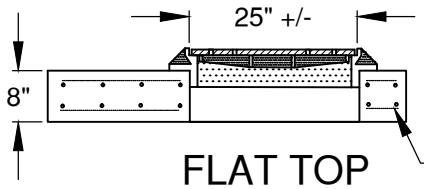

FLAT TOP

#4 BARS @ 12"
EACH WAY TOP & BOTTOM

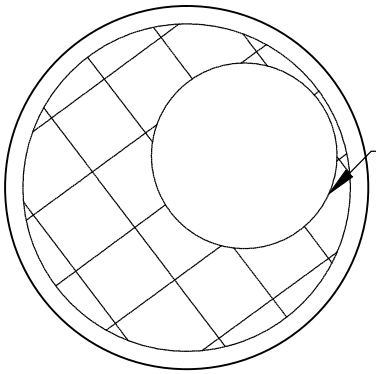

#4 HOOPS

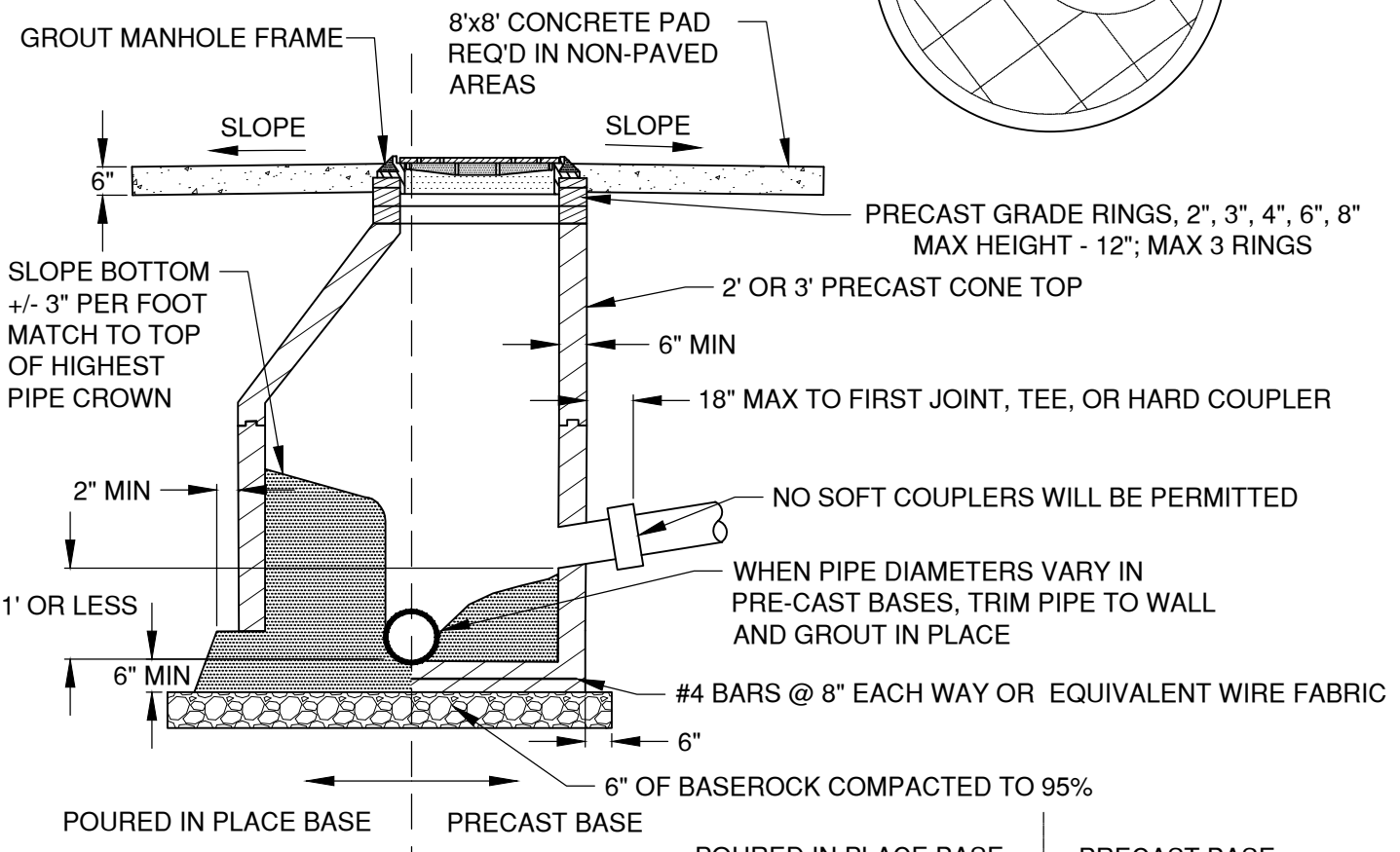

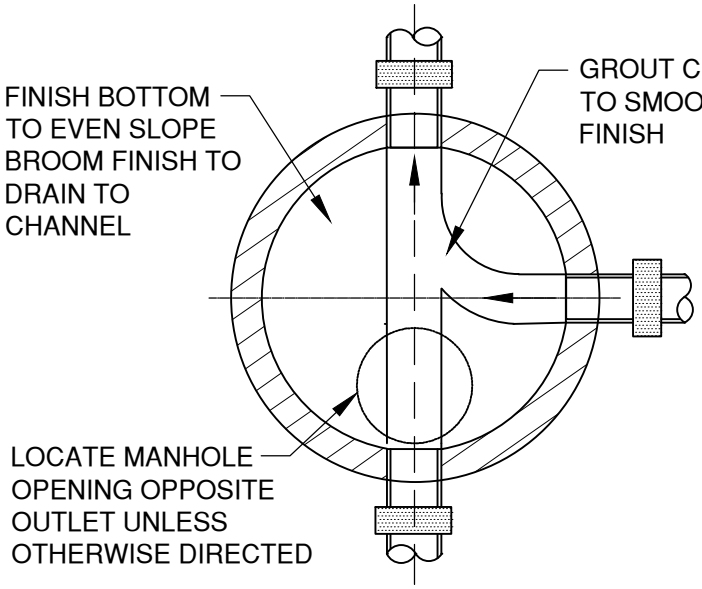

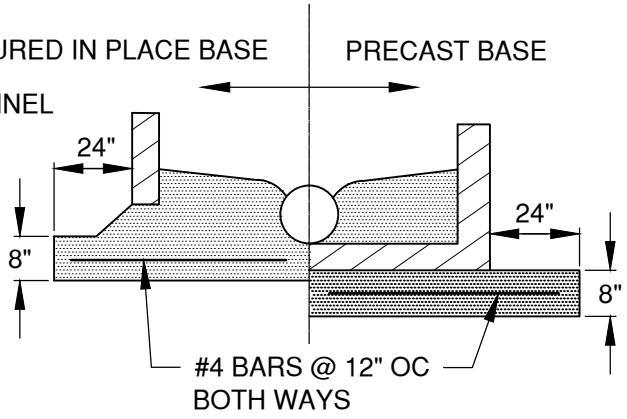

SPREAD FOOTING
(FOR FILL AREAS)

DRAWN LJC	CITY OF BEND	CITY OF BEND	SCALE NTS
DIV SANITARY		STANDARD DRAWING	DATE 3/31/19
REV DATE		710 NW WALL ST., BEND, OREGON 97701	APPR
		STANDARD SEWER MANHOLE	STD DWG S-3B

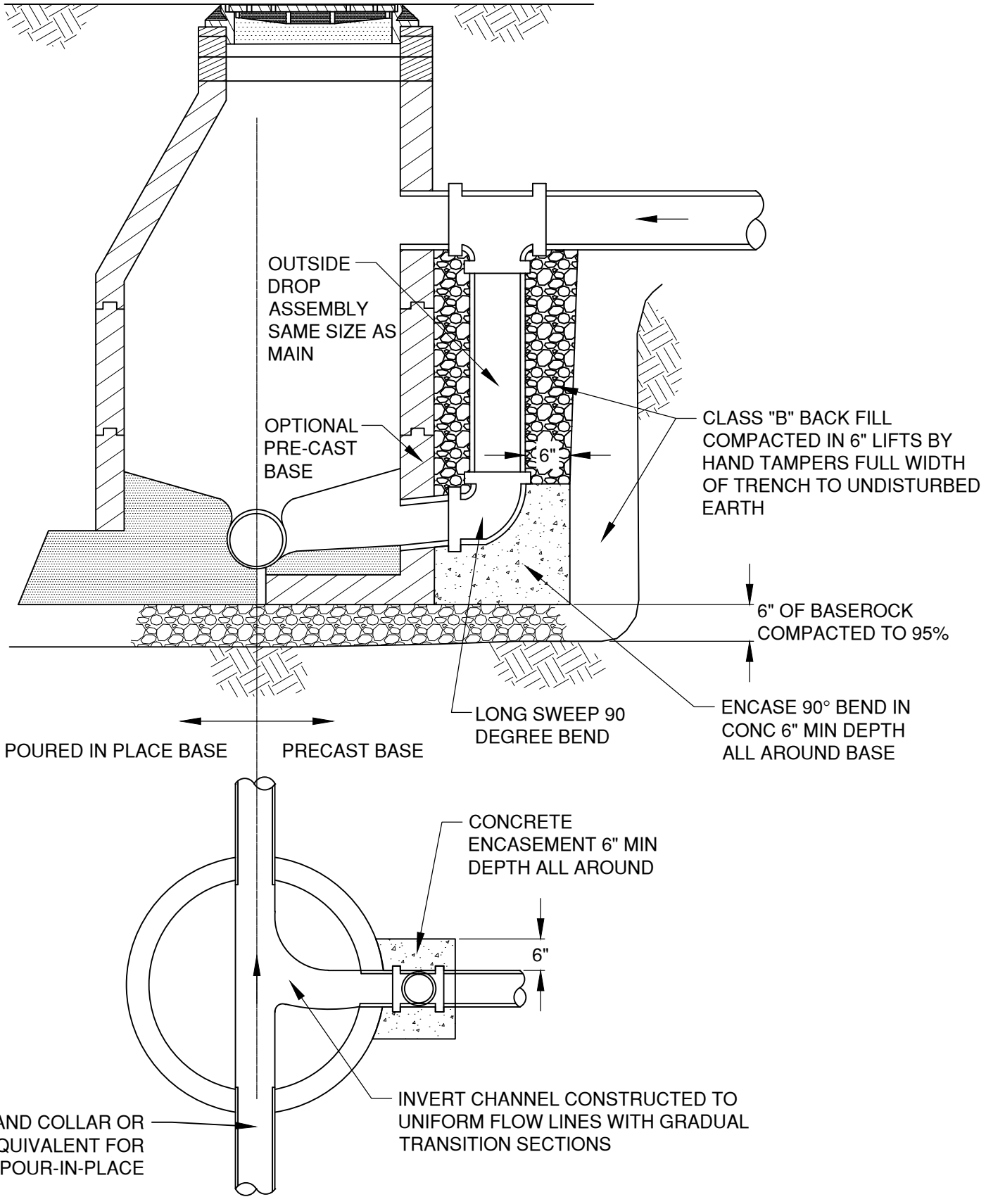

DRAWN LJC	CITY OF BEND	CITY OF BEND STANDARD DRAWING 710 NW WALL ST., BEND, OREGON 97701	SCALE NTS
DIV SANITARY			DATE 12/1/17
REV 2 / DATE 12/1/17			APPR
		STANDARD OUTSIDE DROP SEWER MANHOLE	STD DWG S-4

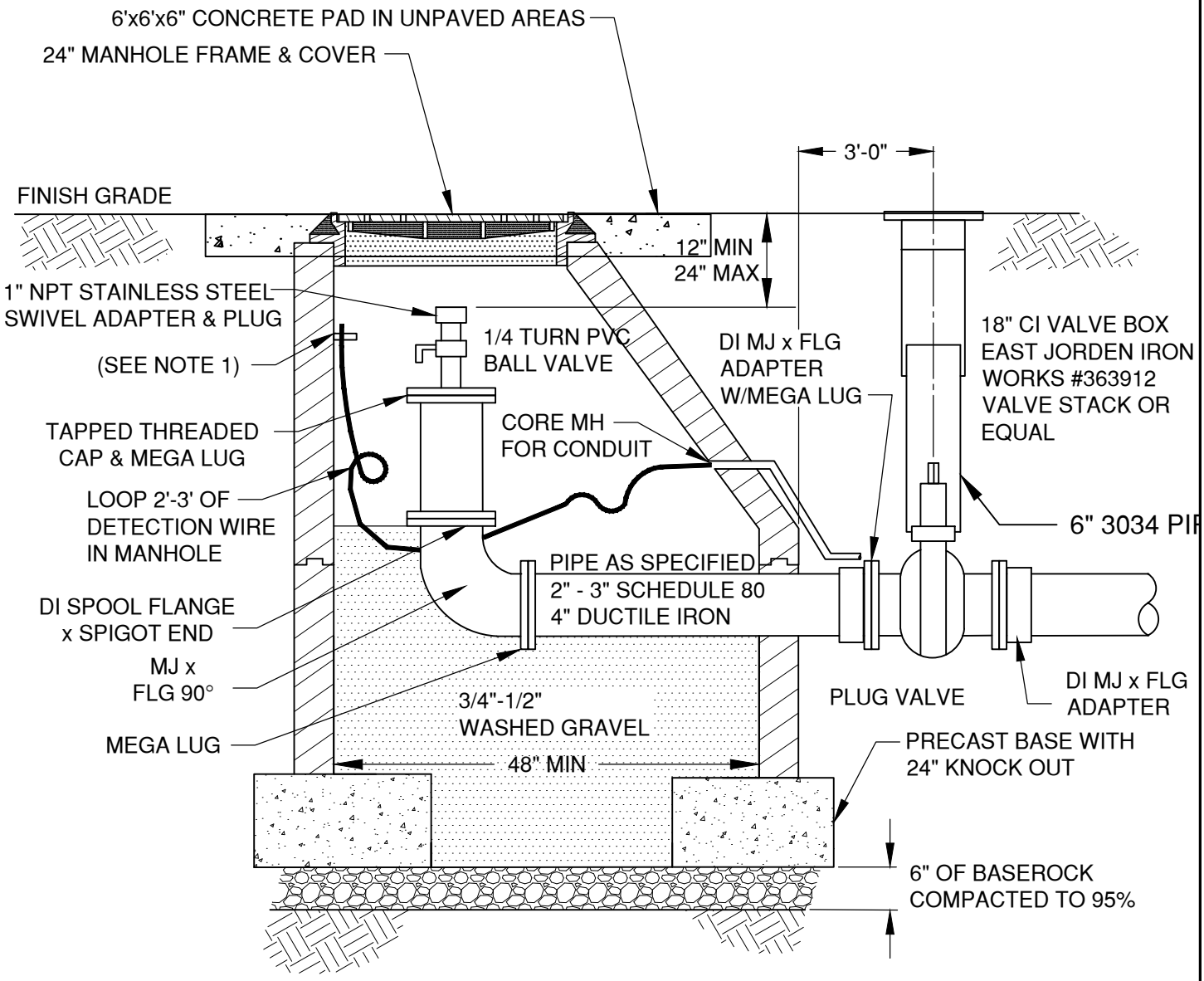

NOTES:

1. DETECTION WIRE SHALL BE EXTENDED WITHIN 18-INCHES OF FINISHED GRADE OR 6" BELOW LOWEST GRADE RING, WHICH EVER IS GREATER, TO A 1.75-INCH STAINLESS STEEL RUBBER CUSHIONED CLAMP MOUNTED TO MANHOLE WITH AS MIN 1/4" X 1-3/4" CONCRETE ANCHOR SCREW.

DRAWN LJC	CITY OF BEND	CITY OF BEND	SCALE NTS
DIV SANITARY		STANDARD DRAWING	DATE 12/1/17
REV 2 / DATE 12/1/17		710 NW WALL ST., BEND, OREGON 97701	APPR
		3" & 4" PRESSURE SEWER LINE TERMINATION CLEANOUT	STD DWG S-5

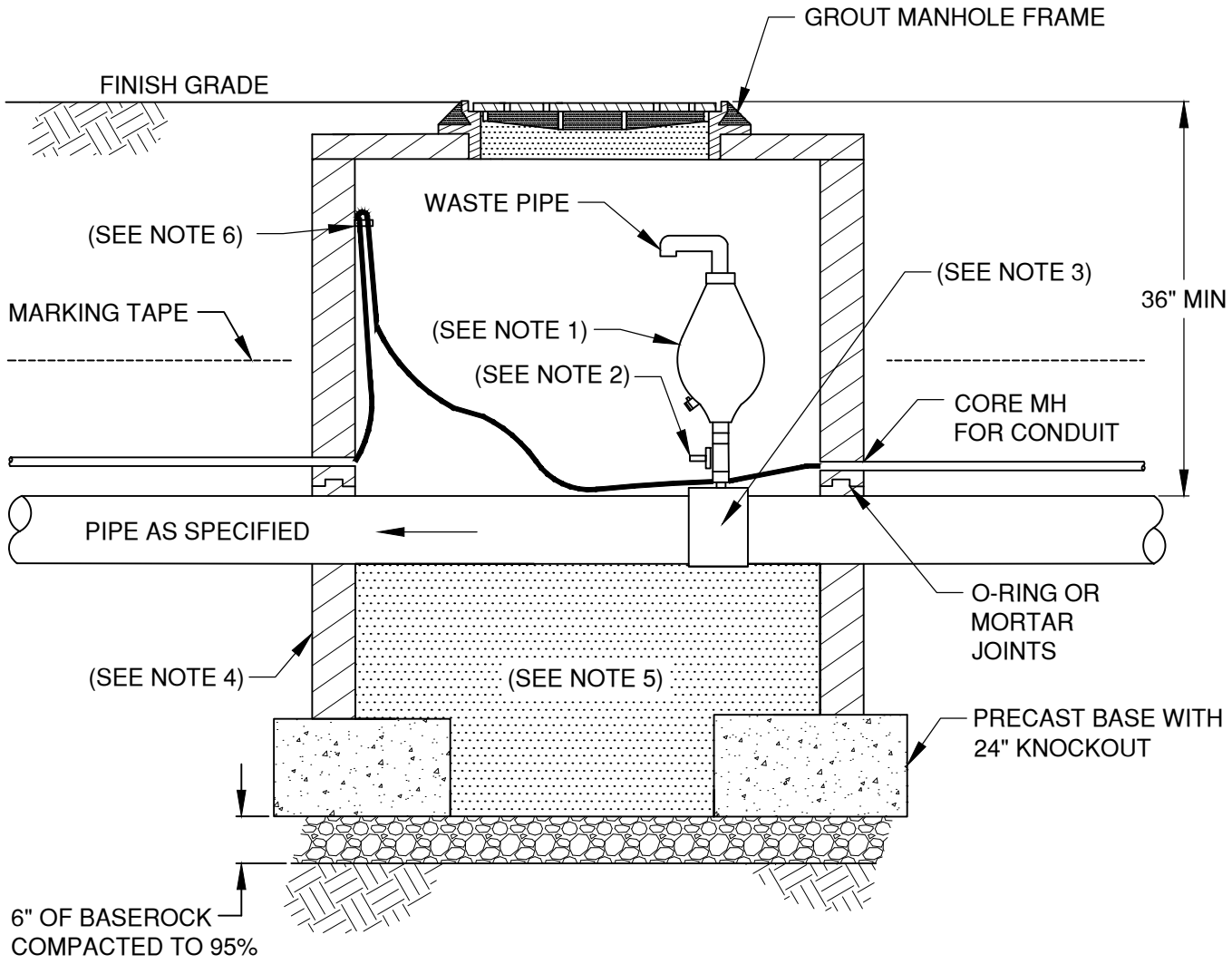

NOTES:

1. ARI 2" D-025 COMBINATION AIR VALVE(SHORT VERSION) PER 00445.11(K)(2)(d)
2. 2" PVC BALL VALVE
3. 2" TEE OR 2" SADDLE TEE AS APPROVED FOR PRESSURE APPLICATIONS
4. 48" DIAMETER FLAT TOP MANHOLE. PRECAST SECTIONS TO CONFORM TO THE REQUIREMENTS OF ASTM C-478
5. 3/4"-1/2" WASHED GRAVEL
6. DETECTION WIRE SHALL BE EXTENDED WITHIN 18-INCHES OF FINISHED GRADE OR 6" BELOW LOWEST GRADE RING, WHICH EVER IS GREATER, TO A 1.75-INCH STAINLESS STEEL RUBBER CUSHIONED CLAMP MOUNTED TO MANHOLE WITH AS MIN 1/4" X 1-3/4" CONCRETE ANCHOR SCREW.

DRAWN LJC	CITY OF BEND	CITY OF BEND	SCALE NTS
DIV SANITARY		STANDARD DRAWING	DATE 12/1/17
REV 2 / DATE 12/1/17		710 NW WALL ST., BEND, OREGON 97701	APPR
		AIR RELEASE/VAC BREAKER PRESSURE SEWER MH	STD DWG S-6

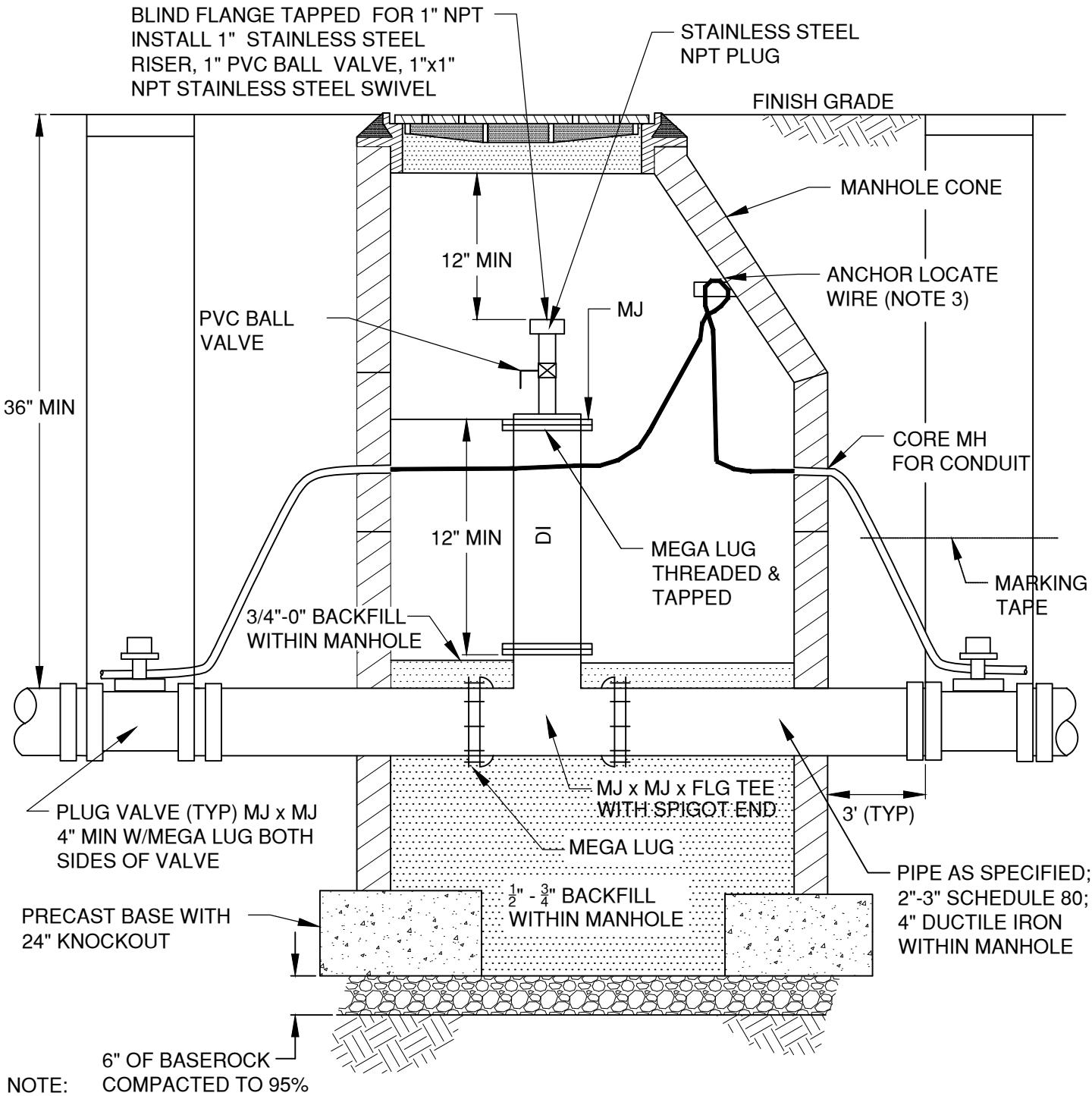

NOTE:

1. ALL DUCTILE IRON FITTINGS THROUGH MANHOLE
2. 48" MINIMUM DIAMETER MANHOLE
3. DETECTION WIRE SHALL BE EXTENDED WITHIN 18-INCHES OF FINISHED GRADE OR 6" BELOW LOWEST GRADE RING, WHICH EVER IS GREATER, TO A 1.75-INCH STAINLESS STEEL RUBBER CUSHIONED CLAMP MOUNTED TO MANHOLE WITH AS MIN 1/4" X 1-3/4" CONCRETE ANCHOR SCREW.

DRAWN LJC	CITY OF BEND	CITY OF BEND	SCALE NTS
DIV SANITARY		STANDARD DRAWING	DATE 12/1/17
REV 2 / DATE 12/1/17		710 NW WALL ST., BEND, OREGON 97701	APPR
		MAIN LINE CLEANOUT PRESSURE SEWER	STD DWG S-7

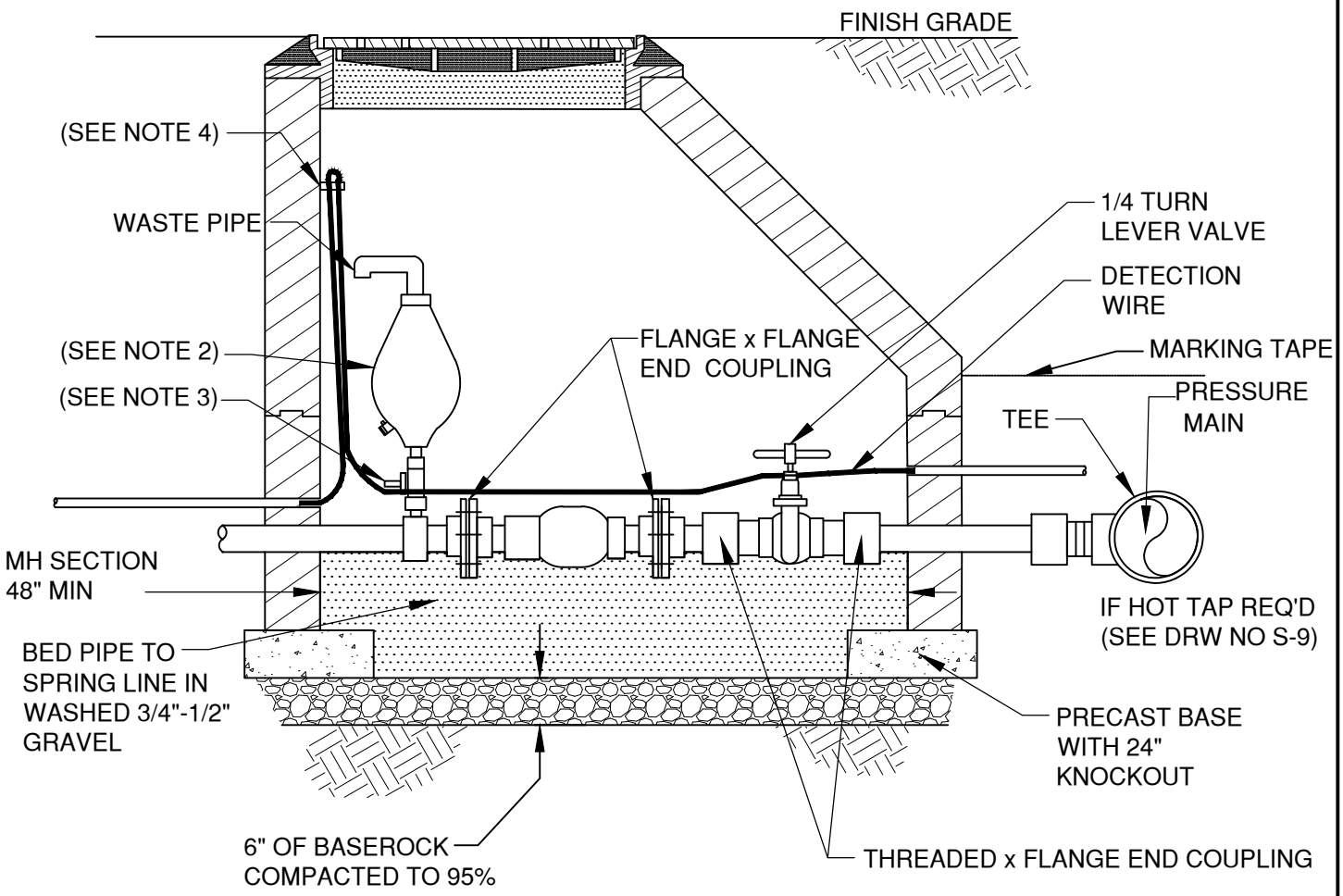

TYPICAL INSTALLATION IN TRAFFIC AREA

NOTE:

1. SHOWN WITH PLUG VALVE IN ENCLOSURE
2. ARI 2" D-025 COMBINATION AIR VALVE (SHORT VERSION)
3. 2" PVC BALL VALVE
4. "DETECTION WIRE SHALL BE EXTENDED WITHIN 18-INCHES OF FINISHED GRADE OR 6" BELOW LOWEST GRADE RING, WHICH EVER IS GREATER, TO A 1.75-INCH STAINLESS STEEL RUBBER CUSHIONED CLAMP MOUNTED TO MANHOLE WITH AS MIN 1/4" X 1-3/4" CONCRETE ANCHOR SCREW."

DRAWN LJC	CITY OF BEND	CITY OF BEND STANDARD DRAWING 710 NW WALL ST., BEND, OREGON 97701	SCALE NTS
DIV SANITARY			DATE 12/1/17
REV 2 / DATE 12/1/17			APPR
	CITY OF BEND	PRESSURE SEWER AIR RELEASE - TRAFFIC AREA	STD DWG S-8

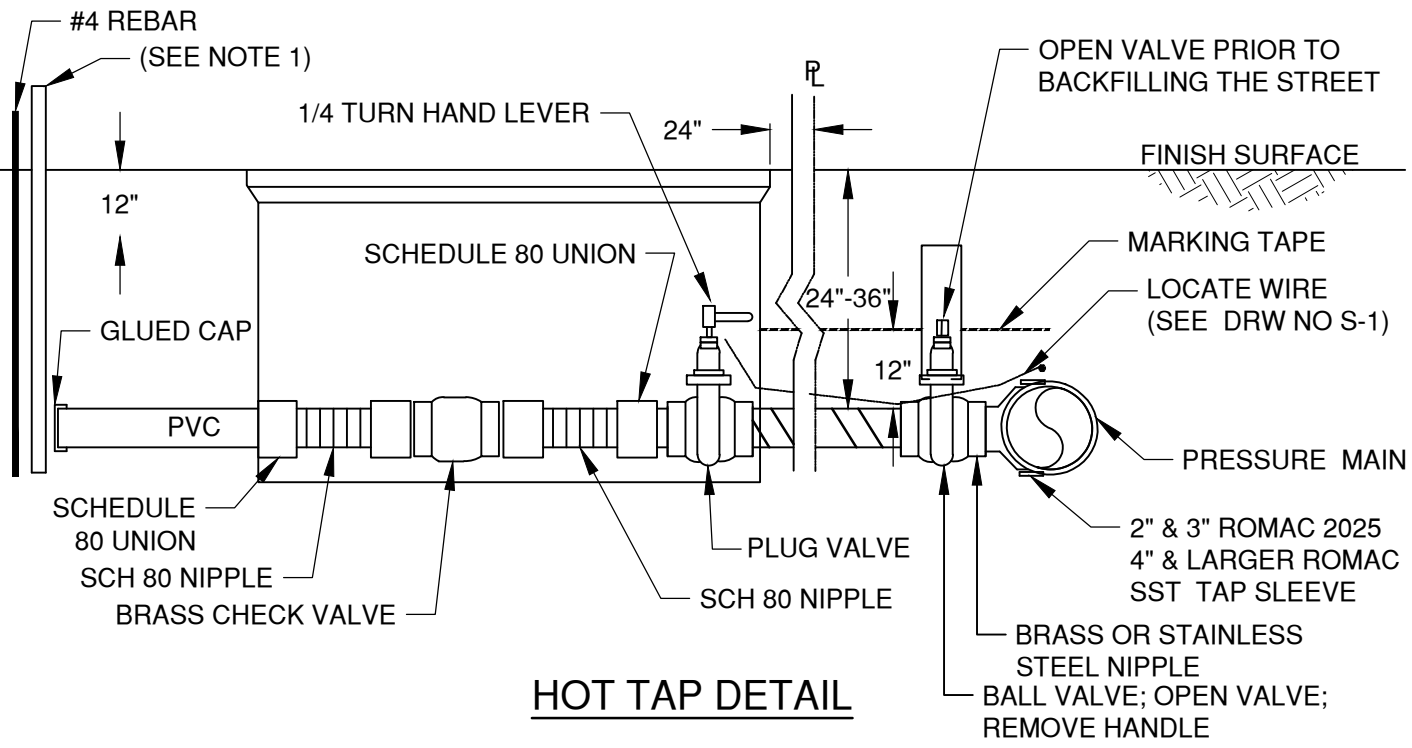

HOT TAP DETAIL

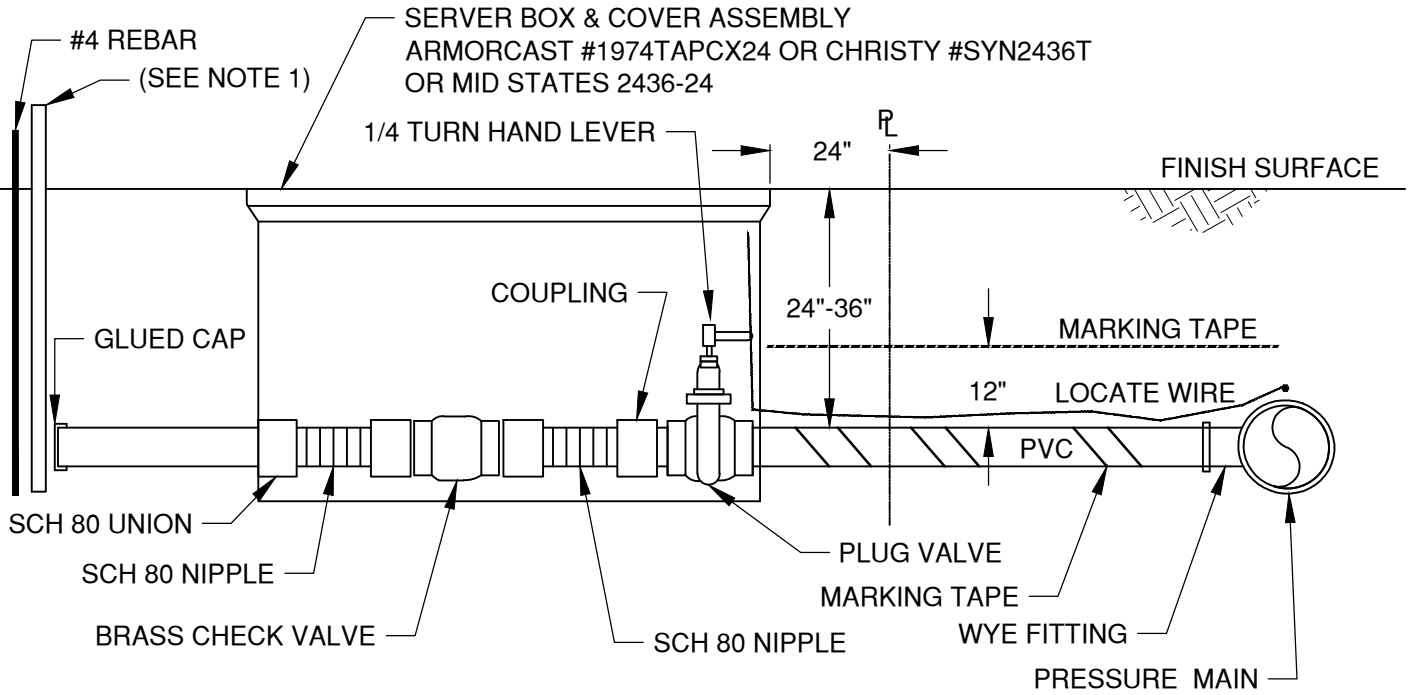

SERVICE LINE PROFILE

NOTE:

1. 2x4 SERVICE MARKER TO FULL DEPTH OF TRENCH. PROJECT END 6" MINIMUM ABOVE FINISH GRADE & PAINT GREEN ALL AROUND
2. SERVICE BOX COVER MARKED "SEWER"
3. CHECK VALVES 3" & LARGER APCO 100. 2" LEGEND T451

DRAWN LJC	CITY OF BEND	CITY OF BEND STANDARD DRAWING 710 NW WALL ST., BEND, OREGON 97701	SCALE NTS
DIV SANITARY			DATE 12/1/17
REV 2 / DATE 12/1/17			APPR
		PRESSURE SEWER SERVICE - NON TRAFFIC AREA	STD DWG S-9

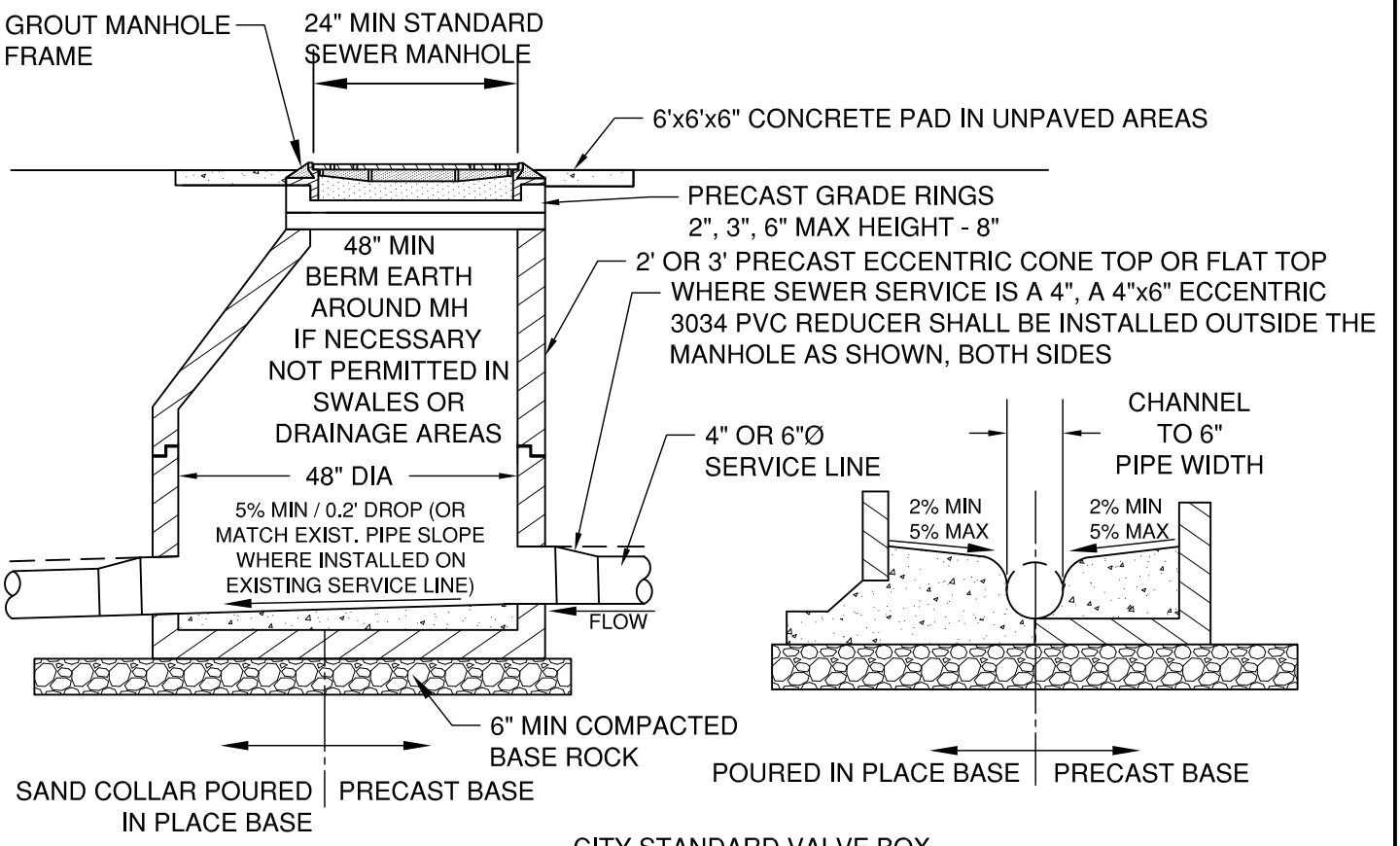

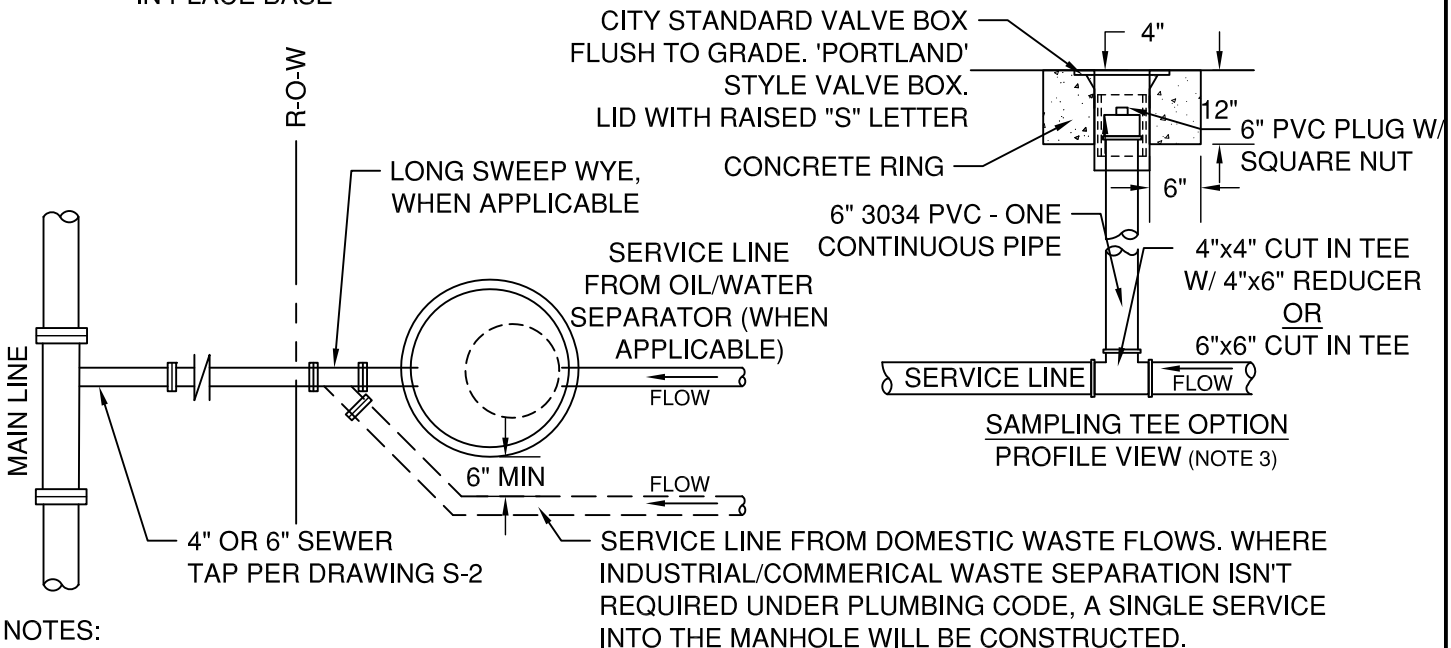

NOTES:

1. MULTIPLE SERVICE LINES SHALL CONNECT UPSTREAM AND OUTSIDE THE SAMPLE MANHOLE
2. SAMPLE MANHOLE TO BE LOCATED ON PRIVATE PROPERTY IN AN ACCESSIBLE AREA.
3. SAMPLING TEE OPTION IS ONLY PERMITTED WHEN APPROVED BY THE CITY ENGINEER. CONSIDERED IN SITUATIONS WHERE EXISTING UTILITIES OR EASEMENTS PREVENT THE INSTALLATION OF MANHOLE.

DRAWN CJH	CITY OF BEND		SCALE NTS
DIV SANITARY	STANDARD DRAWING		DATE 12/1/17
REV 2 / DATE 12/1/17	710 NW WALL ST., BEND, OREGON 97701		APPR
CITY OF BEND	INDUSTRIAL AND COMMERCIAL SERVICES SAMPLING MH		STD DWG S-15

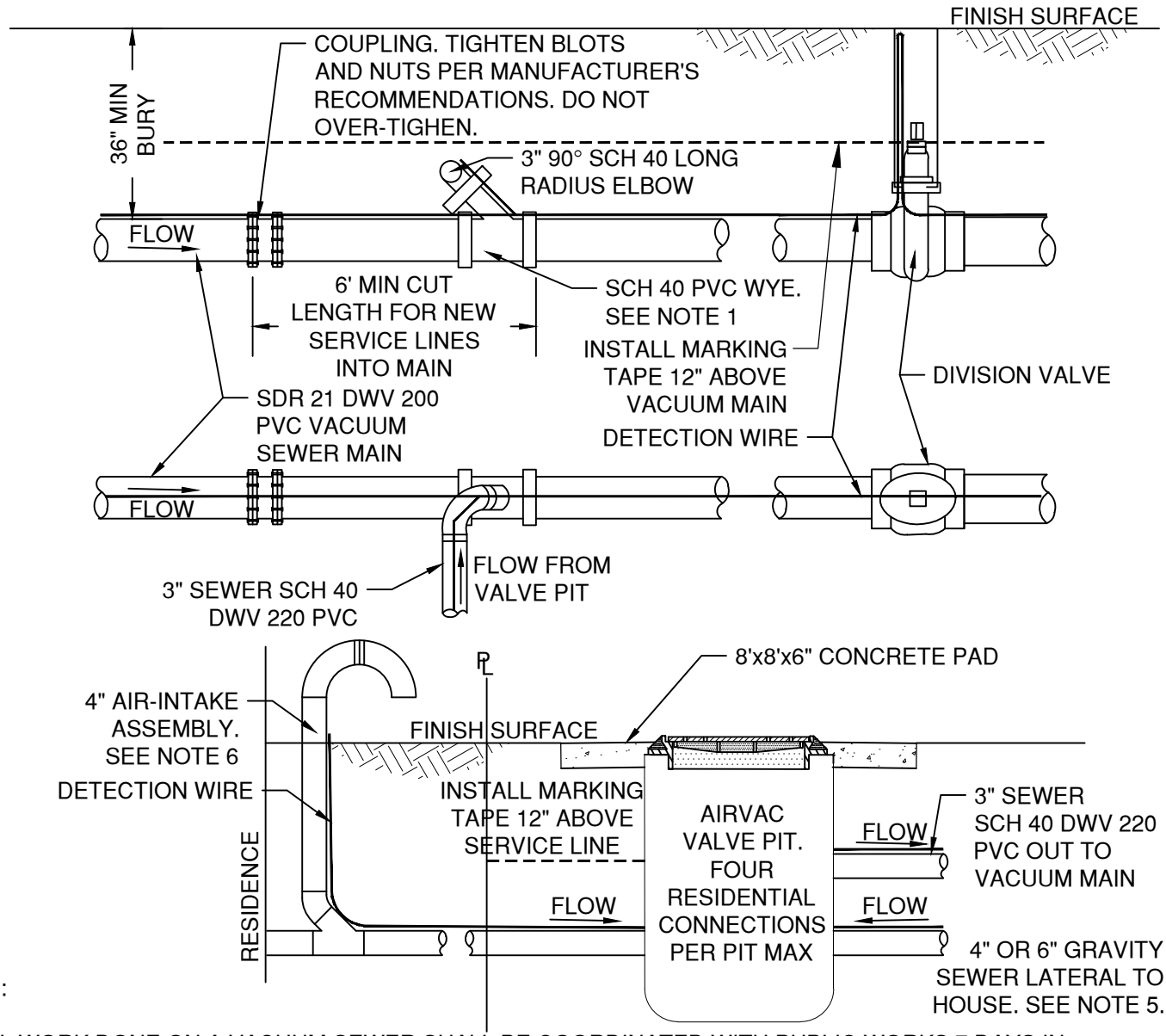

NOTE:

1. ALL WORK DONE ON A VACUUM SEWER SHALL BE COORDINATED WITH PUBLIC WORKS 7 DAYS IN ADVANCE TO COORDINATE VACUUM STATION SHUT DOWN.
2. ALL JOINTS TO BE CONNECTED USING STANDARD PRIMER AND SOLVENT CEMENT. KEEP ALL JOINTS CLEAN AND FREE OF DEBRIS. JOINTS TO BE SCH40 DWV 220 OR APPROVED EQUAL.
3. AFTER INSTALLATION IS COMPLETE, OPEN DIVISION VALVE AND PERFORM VISUAL AND AUDIBLE INSPECTION OF EACH JOINT FOR LEAKS PRIOR TO TRENCH CLOSURE.
4. TRENCH BACKFILL TO BE IN ACCORDANCE TO S-1. DETECTION TAP AND TRACER WIRE TO BE INSTALLED ON ALL MAINS AND SERVICES.
5. INSTALL GRAVITY SEWER LATERALS IN CONFORMANCE WITH PLUMBING CODE. SERVICE LINE FROM THE PIT TO THE HOUSE IS OWNED AND MAINTAINED BY PROPERTY OWNER. CONNECTIONS TO THE AIRVAC VALVE PIT SHALL BE MADE AS PER MANUFACTURER'S SPECIFICATION.
6. AIR-INTAKE SHALL BE INSTALLED IN CONFORMANCE TO THE PLUMBING CODE AND SHALL BE PERMITTED WITH THE BUILDING DEPARTMENT UNDER A PLUMBING PERMIT.
7. PIT TO BE INSTALLED OUTSIDE OF SIDEWALK AND APRON SURFACES IN ROW OR CITY EASEMENT.
8. ALL WORK SHALL CONFORM TO AIR VAC SPECIFICATIONS. NO MORE THAN FOUR SERVICES MAY CONNECT TO A ONE VACCUM PIT.

DRAWN CJH	CITY OF BEND	CITY OF BEND	SCALE NTS
DIV SANITARY		STANDARD DRAWING	DATE 12/1/17
REV / DATE: 12/1/17		710 NW WALL ST., BEND, OREGON 97701	APPR
	CITY OF BEND	VACUUM SEWER SERVICE	STD DWG S-16

CITY OF BEND STANDARD DRAWINGS

Water (W)

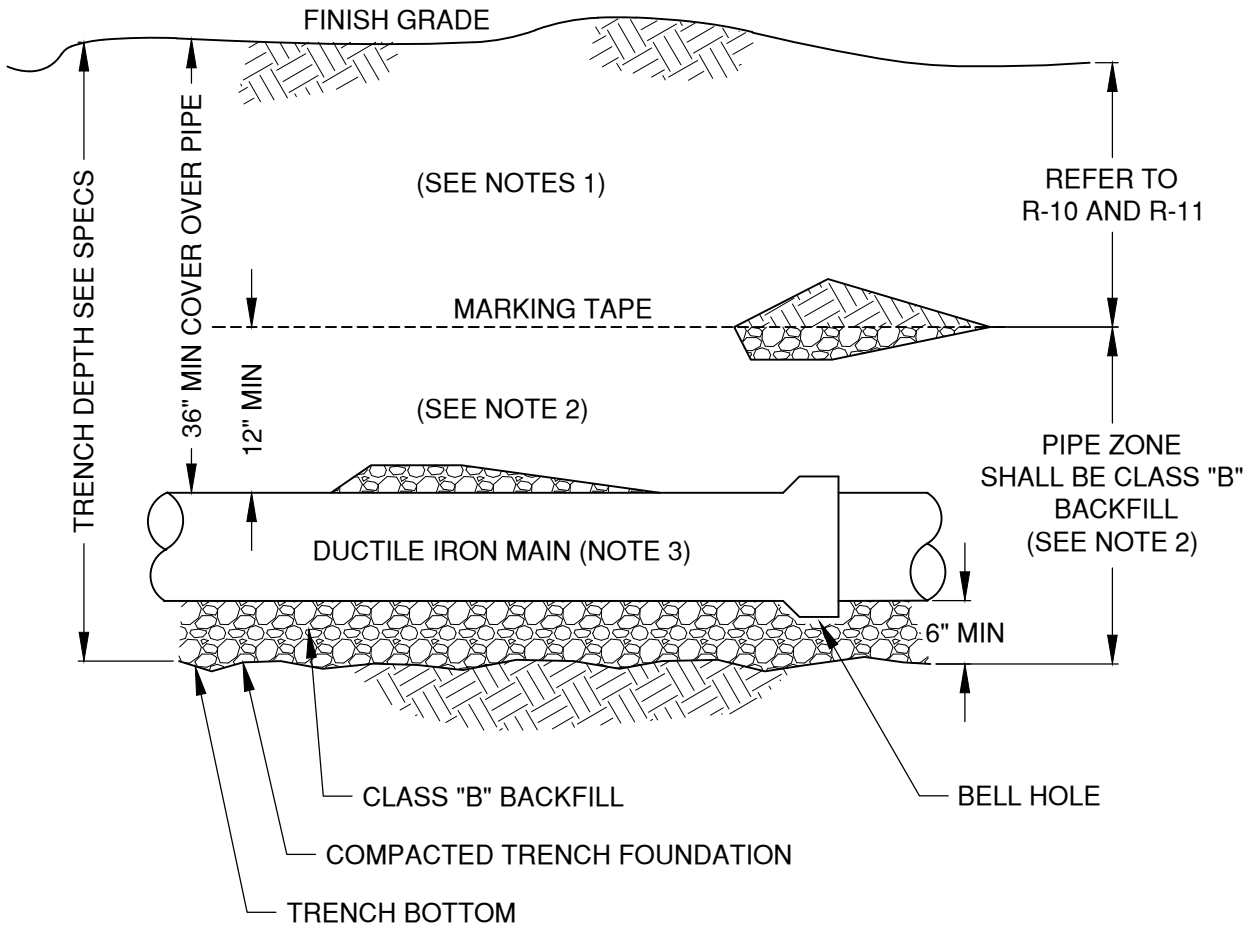

NOTES:

1. SCREENED MAX. 3" MINUS BACKFILL, PER R-10 AND R-11, MECHANICALLY COMPACTED TO 95.0% OF AASHTO T-99-74 SHALL BE CAREFULLY AND THOROUGHLY TAMPED IN LAYERS PER SECTION 00405.00.
2. SPECIFIED PIPE ZONE MATERIAL ABOVE, AROUND, AND BELOW PIPE SHALL BE CAREFULLY AND THOROUGHLY TAMPED IN LAYERS NOT EXCEEDING 6" SO THAT IT IS FULLY COMPACTED TO 95.0% OF AASHTO T-99-74 METHOD C. ALL PIPE ZONE MATERIAL SHALL BE $\frac{3}{4}$" MINUS ROCK CONFORMING TO OSS SPECIFICATIONS 00405.00 AND 01140.10.
3. MEGA-LUG AND FIELD LOK GASKETS, OR APPROVED EQUAL, ARE APPROVED FOR RESTRAINED JOINTS.
4. SEE DRW NO R-10 FOR TRENCHES IN EXISTING PAVED STREETS AND CONCRETE AREAS
5. WOOD BLOCKING IS NOT PERMITTED IN THE BACKFILLED TRENCH.

DRAWN LJC DIV WATER REV DATE	CITY OF BEND	CITY OF BEND STANDARD DRAWING 710 NW WALL ST., BEND, OREGON 97701 WATER MAIN TYPICAL PROFILE	SCALE NTS DATE 3/31/19 APPR STD DWG W-1

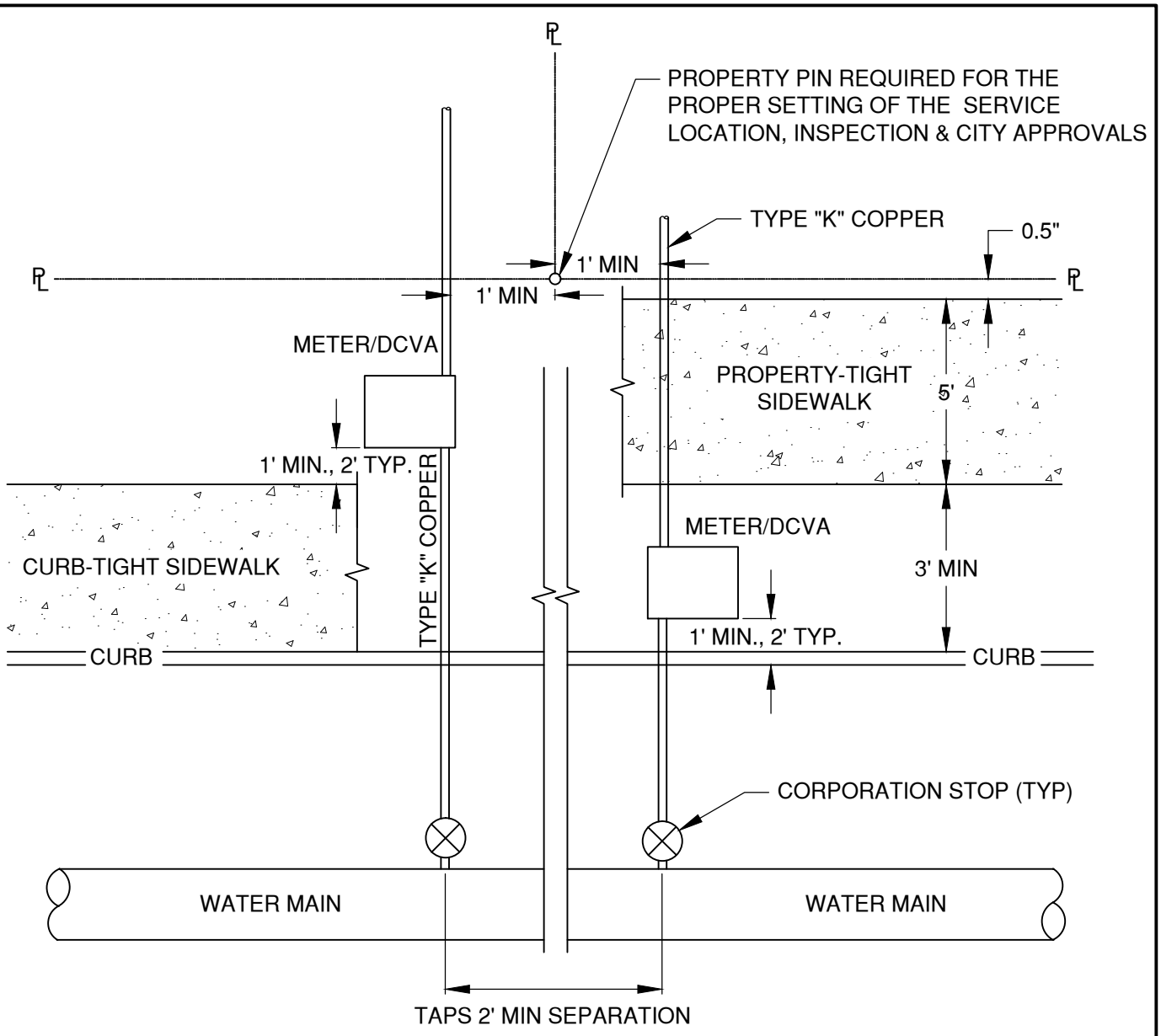

TWO SERVICES SHARING ONE DITCH AT PROPERTY LINE

NOTE:

1. WATER METER BOXES SHALL BE LOCATED IN LANDSCAPE AREAS, NOT IN HARDSCAPE (I.E. SIDEWALKS& DRIVEWAYS). EXCEPTIONS REQUIRE APPROVAL OF CITY ENGINEER
2. SET WATER SERVICES A MINIMUM OF 10' FROM ALL SANITARY, FRANCHISE, STORM, AND ELECTRICAL SERVICES.
3. METER SHALL MATCH SERVICE LINE SIZE OR ONE SIZE SMALLER.
4. A 1" TAP NEAR A BELL SECTION SHALL BE SEPARATED FROM THE BELL BY A MINIMUM OF 2'. TAPS LARGER THAN 1" IN SIZE SHALL BE SEPARATED FROM THE BELL BY A MINIMUM OF 3'.
5. WHERE METERS ARE PLACED IN METER BANKS, A PERMANENT ADDRESS TAG PROVIDED BY THE CONTRACTOR SHALL BE PLACED ON THE METER BOX.

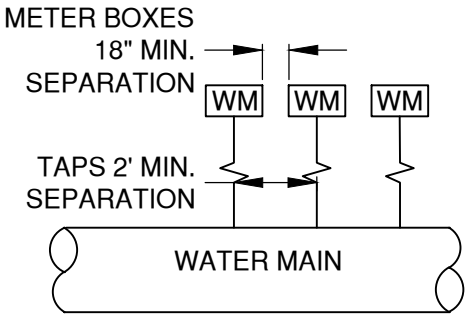

MULTIPLE METER BANK

DRAWN LJC	CITY OF BEND	CITY OF BEND	SCALE NTS
DIV WATER		STANDARD DRAWING	DATE 3/31/19
REV DATE		710 NW WALL ST., BEND, OREGON 97701	APPR
		RESIDENTIAL WATER SERVICE INSTALLATION	STD DWG W-4

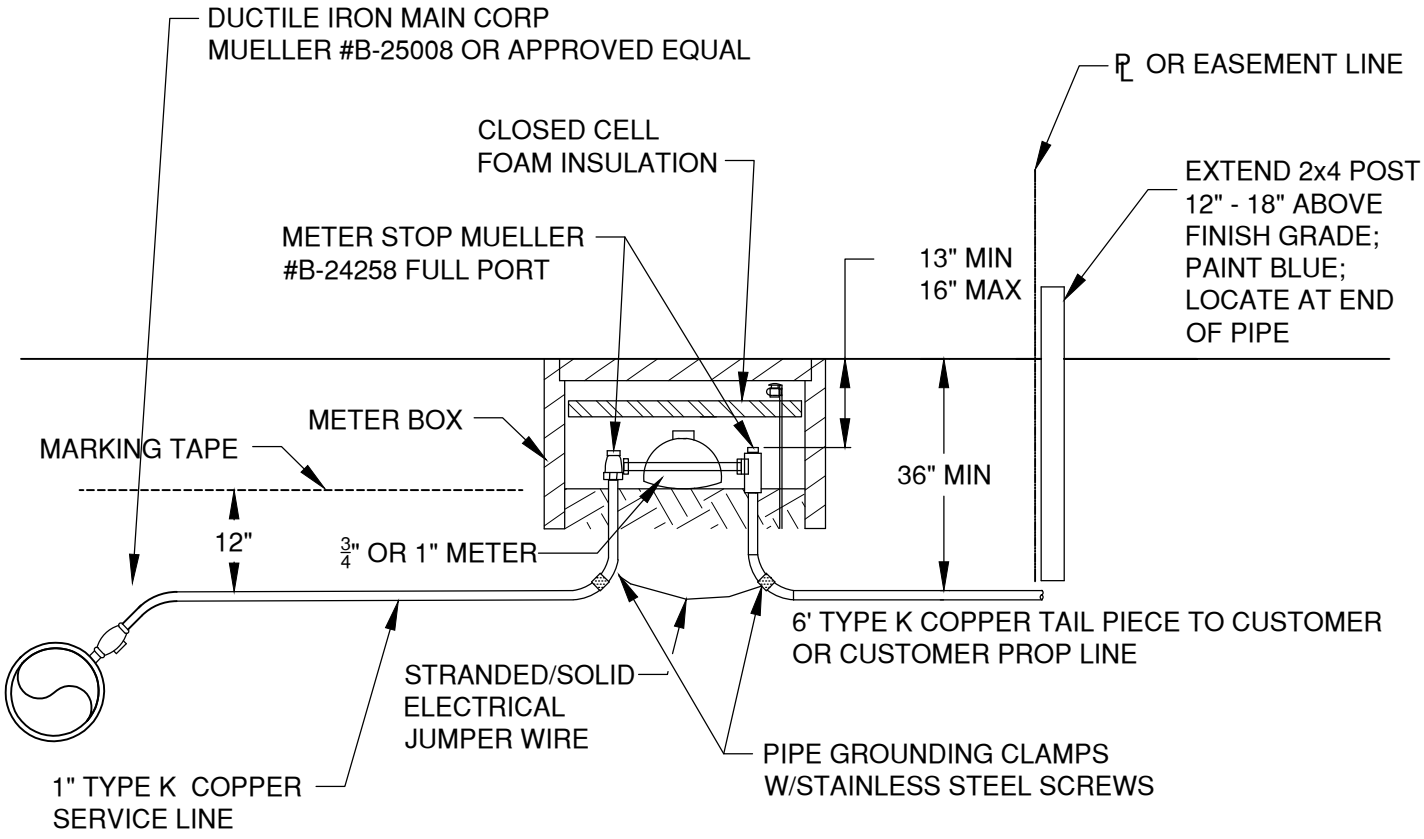

TYPICAL SERVICE

NOTES:

1. METER BOXES SHALL BE SET PARALLEL W/THE CURB LINE AND SHALL NOT BE INSTALLED WITHIN SIDEWALK OR PAVED AREAS
2. JUMPER SIZE 1" METER SETTER - 1 1/4"x11" SCHEDULE 80 THREADED NIPPLE (DOMESTIC) DRILLED TO PREVENT FLOW
3. METERS ARE TO BE THE SAME SIZE AS THE SERVICE LINE OR ONE SIZE SMALLER.

DRAWN LJC	CITY OF BEND	CITY OF BEND STANDARD DRAWING 710 NW WALL ST., BEND, OREGON 97701	SCALE NTS
DIV WATER			DATE 12/1/17
REV / DATE 2 / 12/1/17			APPR
		3/4"-1" RESIDENTIAL METER SERVICE INSTALLATION	STD DWG W-4A

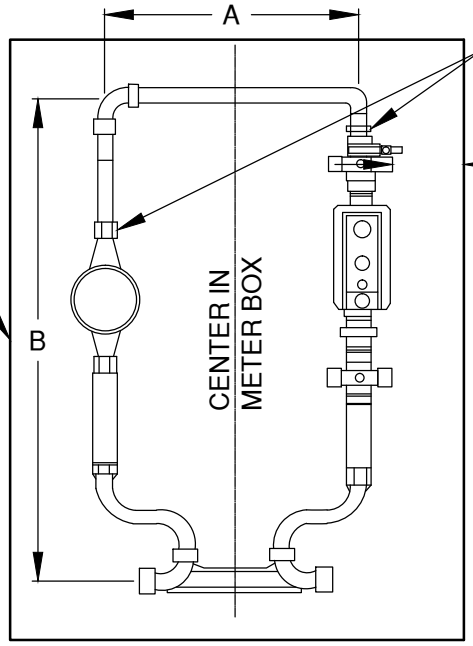

METER COUPLING WITH SADDLE METER NUT (TYP)

4-6" MIN. BETWEEN METER STOP AND METER BOX

ASSEMBLY TO BE CENTERED IN THE METER BOX

BACKFLOW-WATTS 007 SERIES 3/4" OR 1"

	A	B
3/4"	5"	19 1/4"
1"	6"	22"

METER SETTER BAR TO REPLACE EXISTING JUMPER

PLAN

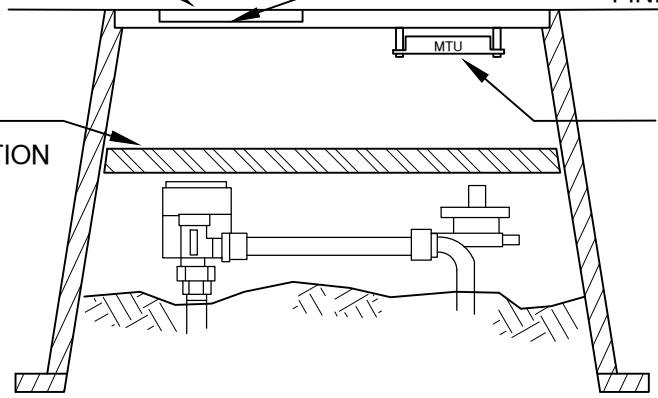

METAL READER DOOR

ADDRESSING TAG TO BE MOUNTED TO THE INSIDE METER DOOR (NOTE 3)

FINISH GRADE

CLOSED CELL FOAM INSULATION 1/2" MIN

METER TRANSMITTER UNIT (MTU) SHALL BE MOUNTED TO THE UNDERSIDE OF THE POLYMER METER BOX LID AT EITHER END OF THE LID AWAY FROM THE METAL READER DOOR.
ACLARA MTU SHALL BE MOUNTED WITH THE "ACLARA" EMBLEM TOWARDS THE LID AND THE ARROW BELOW THE EMBLEM POINTING TOWARDS THE METAL READER DOOR WITH SUPPLIED SPACERS AND (2) 2.5" #10 HEX HEAD SCREWS.

SECTION

OFFSET METER "LOOP" WITH BACKFLOW PREVENTION ASSEMBLY

NOTES:

1. METER BOXES SHALL BE SET PARALLEL W/THE CURB LINE AND SHALL NOT BE INSTALLED WITHIN SIDEWALK OR PAVED AREAS
2. JUMPER SIZE 1" METER SETTER - 1 1/4"x11" SCHEDULE 80 THREADED NIPPLE (DOMESTIC) DRILLED TO PREVENT FLOW
3. WHERE METER BOXES ARE INSTALLED IN A METER BANK, A BRASS OR STAINLESS STEEL TAG/PLAQUE TO BE MOUNTED TO THE INSIDE METER DOOR WITH THE LOT ADDRESS STAMPED.
4. CORRECTIONS OR REPAIRS TO AN EXISTING METER OR HARDWARE WITHIN THE METER BOX MAY REQUIRE THE EXISTING SERVICE TO BE UPGRADED TO CURRENT CITY STANDARDS.

DRAWN LJC	CITY OF BEND	CITY OF BEND	SCALE NTS
DIV WATER		STANDARD DRAWING	DATE 12/1/17
REV / DATE		710 NW WALL ST., BEND, OREGON 97701	APPR
2 / 12/1/17		3/4"-1" RESIDENTIAL METER SERVICE INSTALLATION	STD DWG W-4B

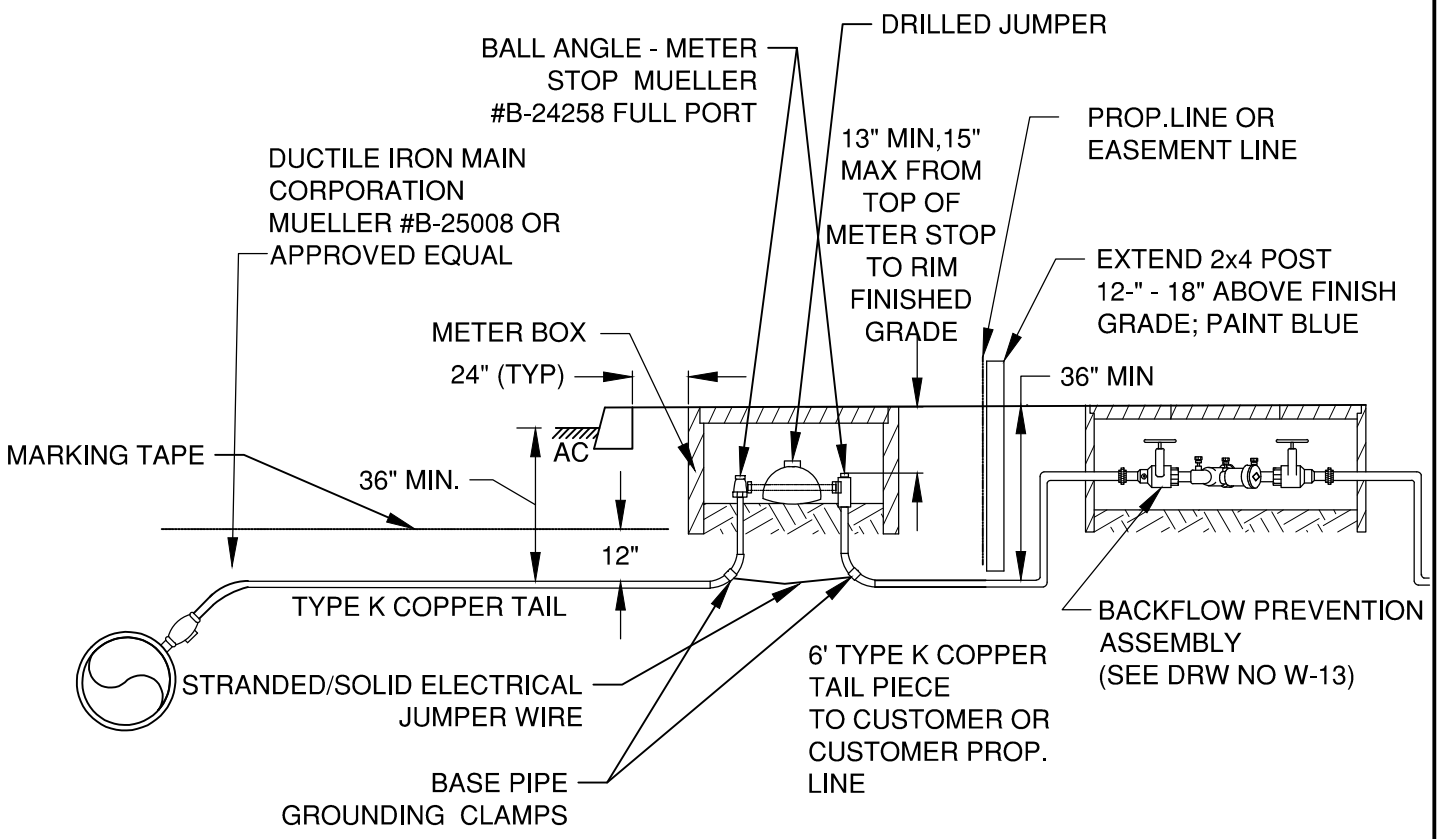

TYPICAL 1" SERVICE WITH METER

NOTES:

1. COMMERCIAL METERS NOT TO BE LESS THAN 1-INCH. METER SIZE TO MATCH SERVICE LINE SIZE.
2. BLOCK PIPE & SET METER OR INSTALL JUMPER PRIOR TO BACKFILLING TRENCH.
3. COMMERCIAL METERS WILL NOT BE SET UNTIL BACKFLOW PREVENTION ASSEMBLY IS IN PLACE.
4. COMMERCIAL METER BOXES SHALL BE INSTALLED PERPENDICULAR TO THE CURB LINE WITH DOUBLE CHECK TO BE LOCATED ON PROPERTY.
5. CORRECTIONS OR REPAIRS TO AN EXISTING METER OR HARDWARE WITHIN THE METER BOX MAY REQUIRE THE EXISTING SERVICE TO BE UPGRADED TO CURRENT CITY STANDARDS.
6. METER BOXES TO BE PLACED OUTSIDE OF HARD SURFACES INCLUDING SIDEWALKS AND APRONS.

DRAWN LJC	CITY OF BEND	CITY OF BEND	SCALE NTS
DIV WATER		STANDARD DRAWING	DATE 12/1/17
REV / DATE: 2 / 12/1/17		710 NW WALL ST., BEND, OREGON 97701	APPR
		1" COMMERCIAL METER SERVICE INSTALLATION	STD DWG W-5

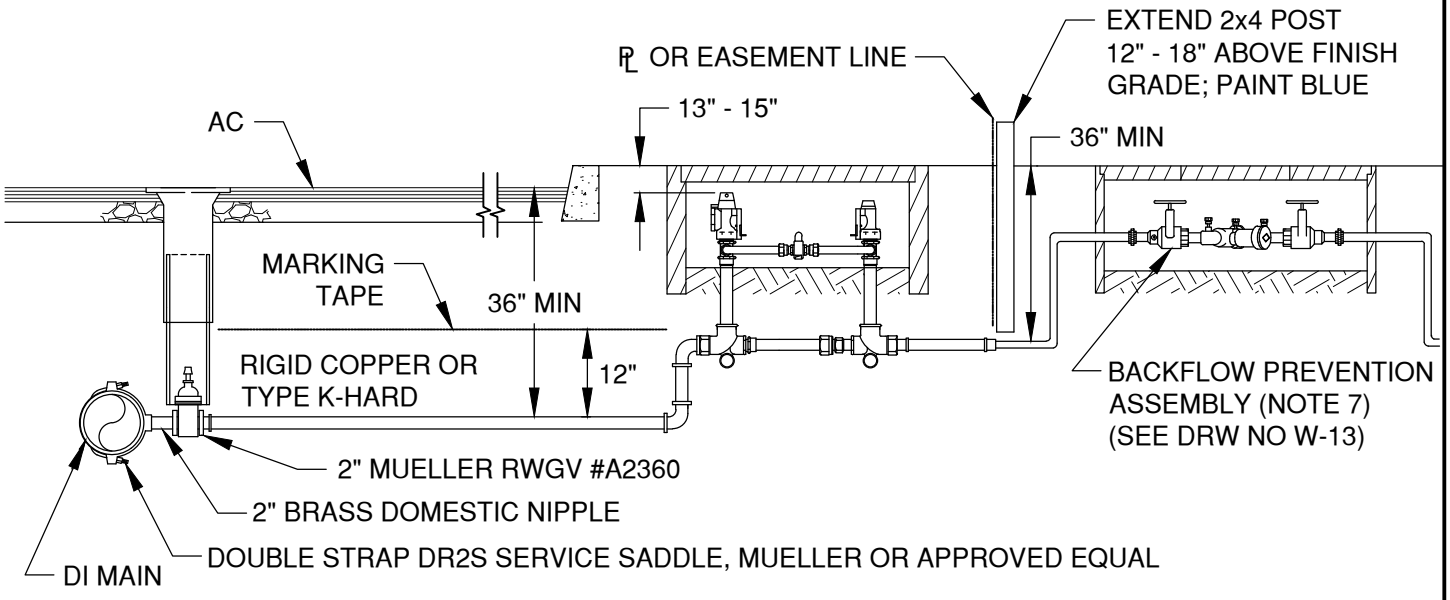

TYPICAL 1 1/2" & 2" SERVICE WITH METER

NOTES:

1. BLOCK PIPE & SET METER OR INSTALL JUMPER PRIOR TO BACKFILLING TRENCH
2. COMMERCIAL METERS WILL NOT BE SET UNTIL BACKFLOW PREVENTION ASSEMBLY IS IN PLACE
3. COMMERCIAL METER BOXES SHALL BE INSTALLED PERPENDICULAR TO THE CURB LINE WITH DOUBLE CHECK TO BE LOCATED ON PROPERTY
4. ALL METERS LESS THAN 2" WHEN USING A 2" SERVICE LINE ARE TO BE REDUCED WITHIN THE 2" METER SETTER
5. CORRECTIONS OR REPAIRS TO AN EXISTING METER OR HARDWARE WITHIN THE METER BOX MAY REQUIRE THE EXISTING SERVICE TO BE UPGRADED TO CURRENT CITY STANDARDS
6. DOUBLE CHECK ASSEMBLY SHALL BE INSTALLED USING THE UNIFORM BUILDING CODE (UBC) AND SHALL BE LOCATED ON A PRIVATE PROPERTY. THE ABOVE DIAGRAM IS FOR REFERENCE ONLY AND IS SUBJECT TO CHANGE BASED ON A REVIEW BY THE UBC PLANS EXAMINER.

DRAWN LJC	CITY OF BEND	CITY OF BEND	SCALE NTS
DIV WATER		STANDARD DRAWING	DATE 12/1/17
REV 2 / DATE 12/1/17		710 NW WALL ST., BEND, OREGON 97701	APPR
		1 1/2" & 2" COMMERCIAL METER SERVICE INSTALLATION	STD DWG W-5A

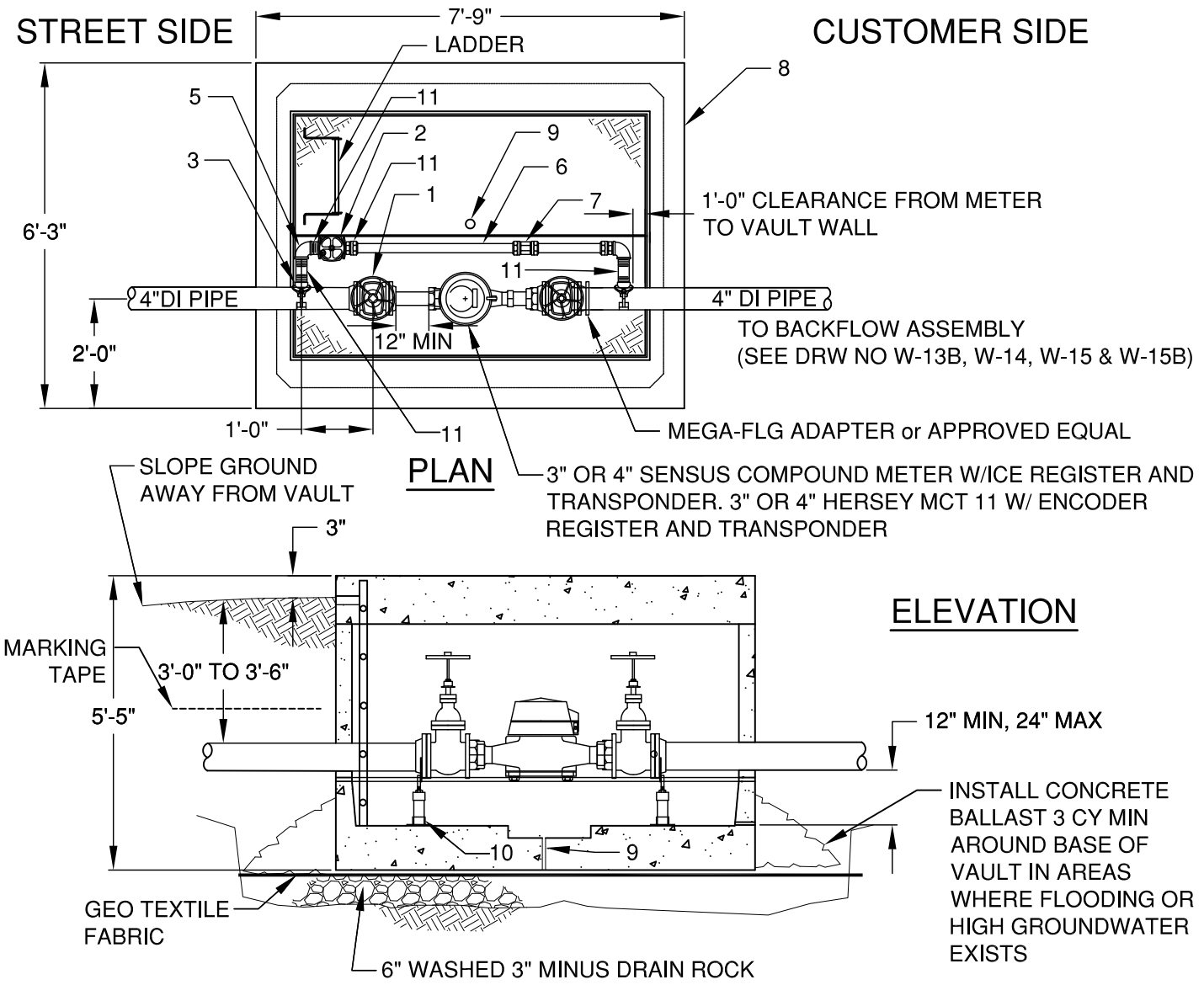

ITEM	QTY	DESCRIPTION
1	2EA	4"x3" FLG x FLG REDUCER & 3" FLG GATE VALVE WITH HANDWHEEL OR
	2	4"x4" FLG GATE VALVE WITH HANDWHEEL
2	1	2" SE GATE VALVE AWWA C509
3	2	DOUBLE STRAP DR-25 SERVICE SADDLE, MUELLER OR APPROVED EQUAL
5	2	2" BRASS 90° COMP x COMP
6	2	2" TYPE K HARD COPPER PIPE
7	1	2" COMP UNION
8	1	UTILITY VAULT 675-WA-730 WITH OPENING FOR BILCO DOOR JD-3AL AND OSHA APPROVED LADDER (SEE DRW NO W-6)
9	1	WEEP HOLE (12"x12"x3" SUMP)
10	2	2" PIPE STAND "STANDON"
11	4	2" MPT x COMP ADAPTER

NOTES:
1. SEAL ALL OPENINGS IN VAULT WITH NON SHRINK GROUT
2. CONTRACTOR TO BRING ERT'S TO PUBLIC WORKS FOR INSTALLATION AND INSPECTION
3. ENGINEER TO PROVIDE PIPE RESTRAINT DETAIL ENTERING & EXITING VAULT
4. METER SIZE TO MATCH SERVICE SIZE OR ONE SIZE SMALLER.
5. WHERE THE METER DOES NOT PROVIDE A TEST PORT, A 2" TEST PORT SHALL BE INSTALLED WITH 2" TAP SADDLE, 2" BRASS BALL VALVE AND 2" BRASS NIPPLE

DRAWN LJC	CITY OF BEND	CITY OF BEND	SCALE NTS
DIV WATER	STANDARD DRAWING		DATE 12/1/17
REV / DATE	710 NW WALL ST., BEND, OREGON 97701		APPR
		3" & 4" COMMERCIAL METER INSTALLATION	STD DWG W-5B

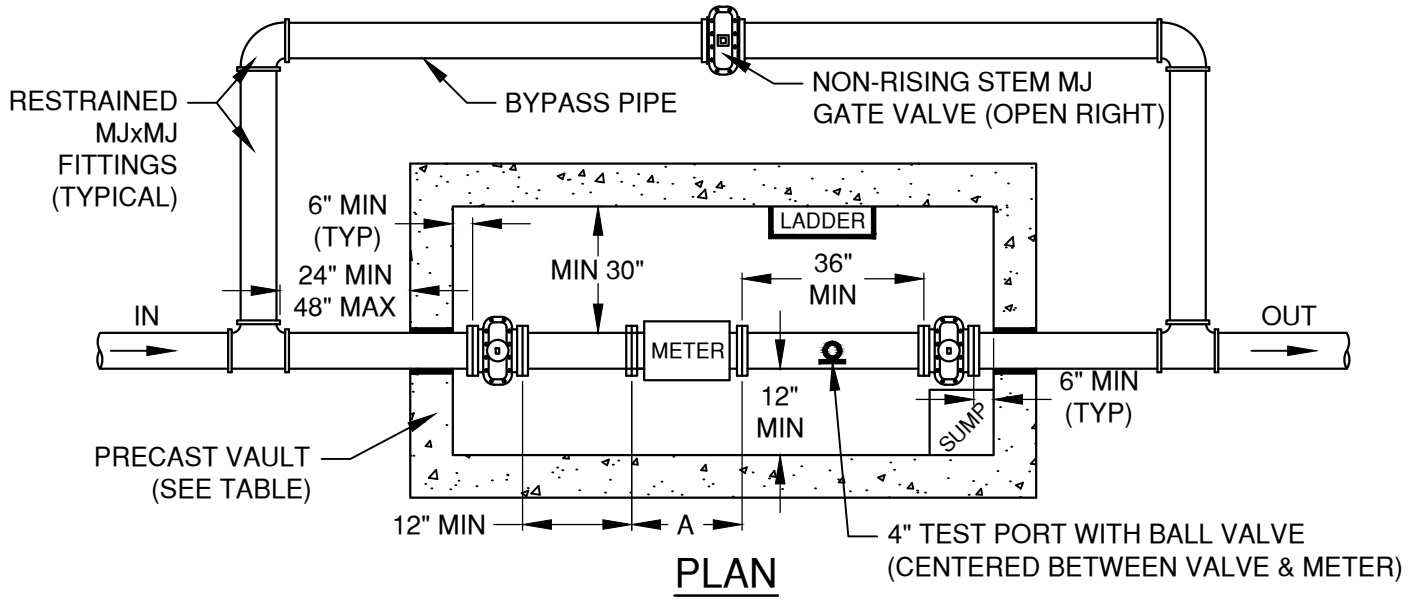

PLAN

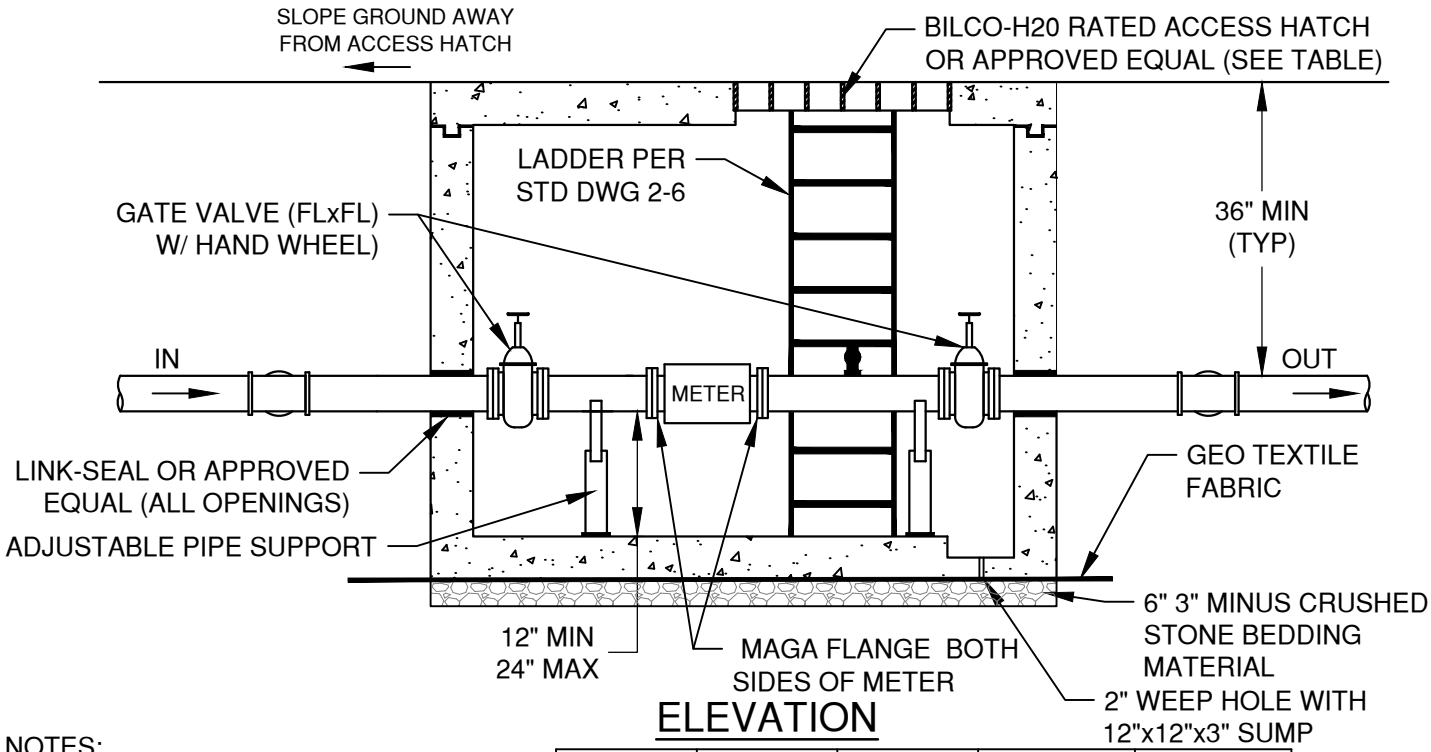

ELEVATION

NOTES:

1. CONTRACTOR TO BRING ERT'S TO PUBLIC WORKS FOR INSTALLATION AND INSPECTION
2. ENGINEER TO PROVIDE PIPE RESTRAINT DETAIL ENTERING & EXITING VAULT
3. METER SIZE TO MATCH SERVICE SIZE OR ONE SIZE SMALLER.

METER (INCH)	BYPASS (INCHES)	VAULT*	BILCO DOOR	A (INCHES)
6"	4"	810-LA	J-5AL	15"±
8"	6"	810-LA	JD-3AL	17"±
10"	8"	612-LA	JD-3AL	20"±
12"	12"	612-LA	JD-3AL	24"±

* VAULT SIZES MAY VARY BY ENGINEER DESIGN PROVIDE MIN DIMENSIONS ARE MAINTAINED

DRAWN CJH DIV WATER REV DATE	CITY OF BEND	CITY OF BEND STANDARD DRAWING 710 NW WALL ST., BEND, OREGON 97701 6" AND LARGE COMMERCIAL METER INSTALLATION
		SCALE NTS DATE 12/1/17 APPR STD DWG W-5C

SIDEWALK INSTALLATION WITHIN 5' PUBLIC ACCESS EASEMENT AS REQUIRED BY BEND CENTRAL DISTRICT. MAY NOT BE APPLICABLE FOR ALL PROJECTS.

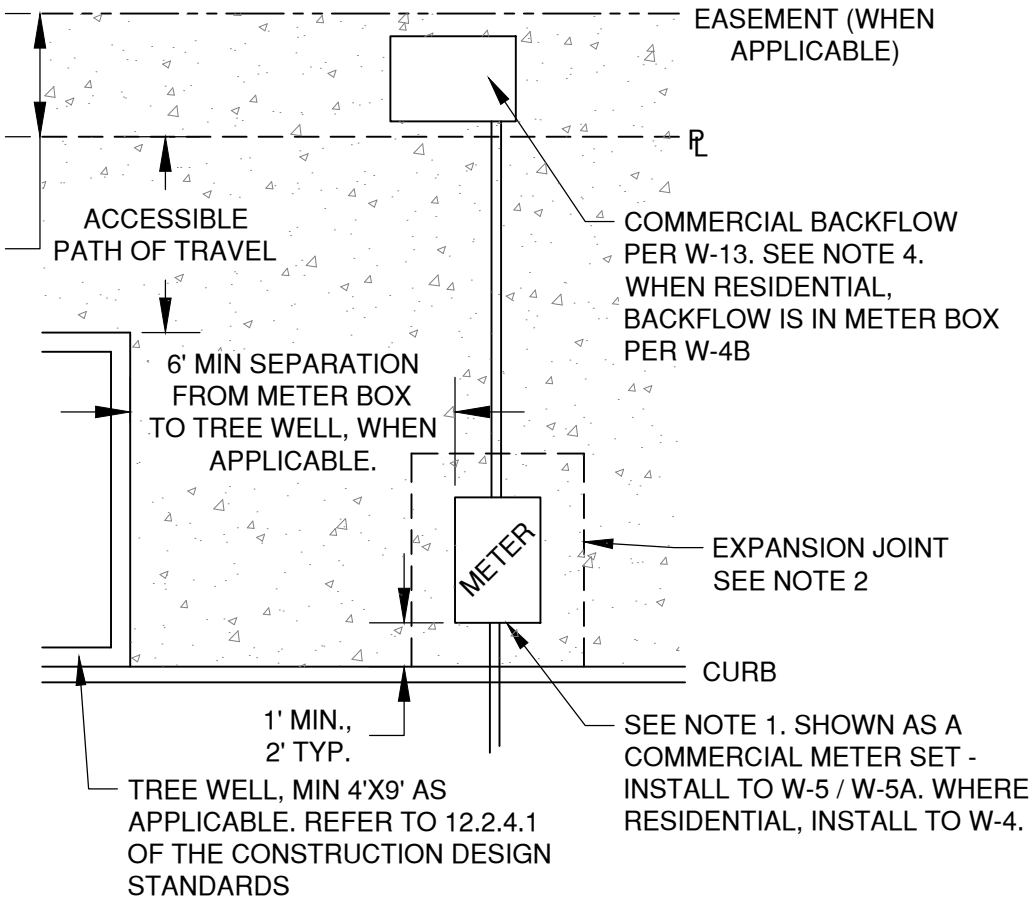

TYPICAL INSTALLATION IN THE BEND CENTRAL DISTRICT OR WHERE WIDENED SIDEWALKS ARE REQUIRED BY DEVELOPMENT CODE. METERS TO BE PERMITTED WITHIN HARDSCAPE ONLY WHEN APPROVED BY THE CITY ENGINEER.

NOTE:

1. WATER METER BOXES SHALL BE LOCATED IN LANDSCAPE AREAS WHEN POSSIBLE. IF WATER METER BOX CAN BE LOCATED ON PRIVATE PROPERTY TO REMOVE IT FROM SIDEWALK, A UTILITY EASEMENT SHALL BE GRANTED TO THE CITY TO MAINTAIN THE METER.
2. AN EXPANSION JOINT IN THE SIDEWALK SHALL BE INSTALLED 12-INCH AROUND THE ENTIRE PERIMETER OF THE METER BOX.
3. STATE SPEC BASE ROCK SHALL BE COMPACTED TO 95% IMMEDIATELY BELOW AND FOR A MINIMUM OF 3 FEET AROUND THE METER BOX.
4. BACKFLOWS SHALL BE INSTALLED ON PRIVATE PROPERTY. WHERE BACKFLOW DEVICES CANNOT BE PLACED WITHIN LANDSCAPE, THE BOX SHALL BE INSTALLED OUTSIDE THE RIGHT OF WAY AND OUTSIDE A PUBLIC UTILITY EASEMENT. INSTALLATION OF BACKFLOW DEVICES WITHIN A BUILDING WILL BE GRANTED ON A CASE BY CASE BASIS BY THE CITY ENGINEER ONLY WHERE IT CAN BE ADEQUATELY SHOWN NOT TO FIT OUTSIDE THE BUILDING (EXAMPLE, THE BACKFLOW, AND THEREFORE THE VAULT, IS TOO LARGE TO FIT)
5. SET WATER SERVICES A MINIMUM OF 10' FROM ALL SANITARY, FRANCHISE, STORM, AND ELECTRICAL SERVICES. ALL TREE WELLS SHALL BE A MINIMUM 6 FEET FROM THE METER BOX INSTALLATION.
6. WATER METERS SHALL NOT BE PLACED WITHIN VEHICULAR SURFACES (DRIVEWAYS) WITHOUT CITY ENGINEER APPROVAL.

DRAWN LJC	CITY OF BEND	CITY OF BEND STANDARD DRAWING 710 NW WALL ST., BEND, OREGON 97701	SCALE NTS
DIV WATER			DATE 3/31/19
REV DATE			APPR
	CITY OF BEND	METER INSTALLATION IN SIDEWALKS	STD DWG W-5D

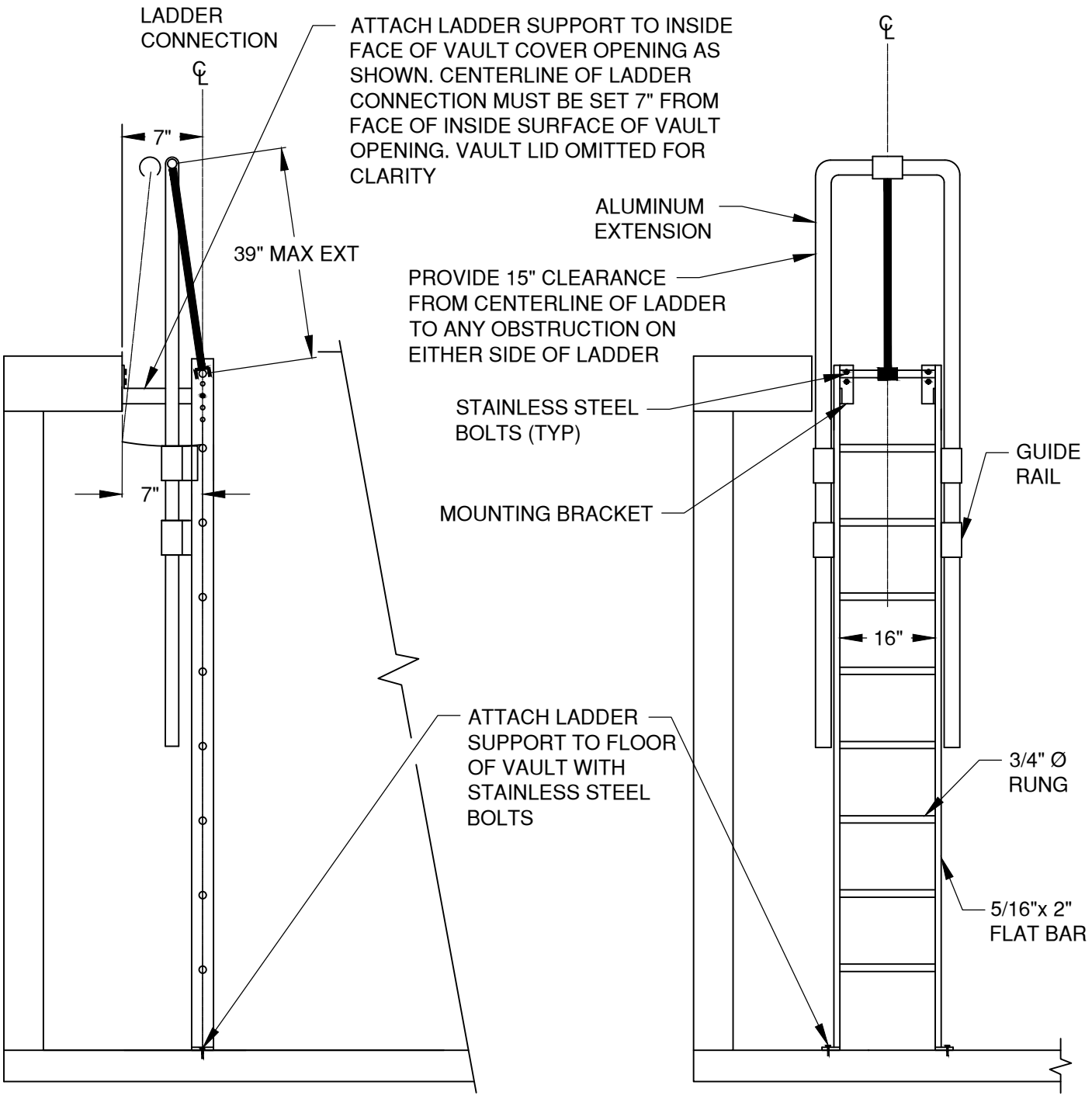

SIDE VIEW

FRONT VIEW

NOTES:

1. GALVANIZED LADDER W/AN ALUMINUM EXTENSION BY UTILITY VAULT (OR APPROVED EQUAL) (PER OAR 437, DIV 2, CODE OF FEDERAL REGULATIONS, TITLE 29, CHAPTER XVII PART 1910.27)
2. 5'-4" GALVANIZED LADDER FROM UTILITY VAULT TO BE CUT DOWN TO 4'-7" BY CONTRACTOR FOR USE IN VAULT 675-WA. UTILITY VAULT TO SUPPLY 49 1/2" ALUMINUM EXTENSION

DRAWN	CITY OF BEND	CITY OF BEND STANDARD DRAWING 710 NW WALL ST., BEND, OREGON 97701	SCALE NTS
DIV ROADWAY			DATE 12/1/17
REV / DATE			APPR
		GALV. LADDER W/ ALUM EXT FOR WATER VAULTS	STD DWG W-6

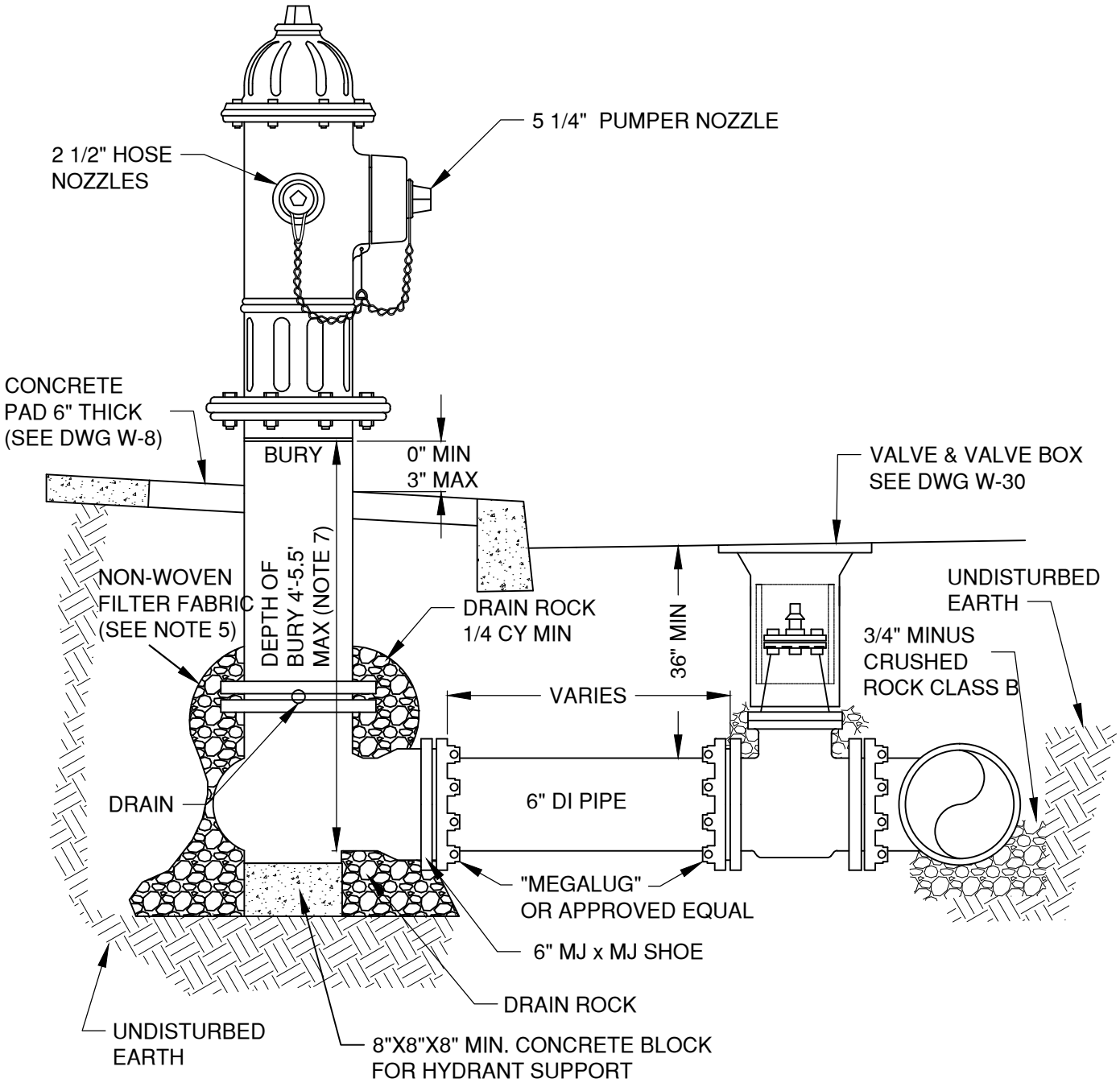

NOTES:

1. ALL PIPES SHALL HAVE RESTRAINED JOINTS.
2. MJ x MJ TEE OR MJxMJxSWIVEL (OPTIONAL) WITH 6-INCH VALVE AT THE MAINLINE.
3. FINISH GRADE OF HYDRANT SHALL BE SET AT BURY LINE TO A MAXIMUM OF 3" BELOW BURY LINE. NO HYDRANT EXTENSIONS PERMITTED ON NEW INSTALLATIONS.
4. SET HYDRANT PLUMB. COMPACT ALL BACKFILL PER SPECIFICATIONS.
5. NON-WOVEN SEPARATION FILTER FABRIC (OSS TABLE 02320-4) INSTALLED BETWEEN UNDISTURBED EARTH AND DRAINROCK PRIOR TO BACKFILL.
6. HYDRANTS SHALL BE MANUFACTURER'S RED. NO OTHER COLOR IS PERMITTED.
7. BURY DEPTH IS MAX 5.5' FEET. USE 45 DEGREE OR 22.5 DEGREE BENDS TO ADJUST ACCORDINGLY.

DRAWN LJC DIV WATER REV DATE	CITY OF BEND	CITY OF BEND STANDARD DRAWING 710 NW WALL ST., BEND, OREGON 97701 TYPICAL HYDRANT	SCALE NTS DATE 3/31/19 APPR STD DWG W-7

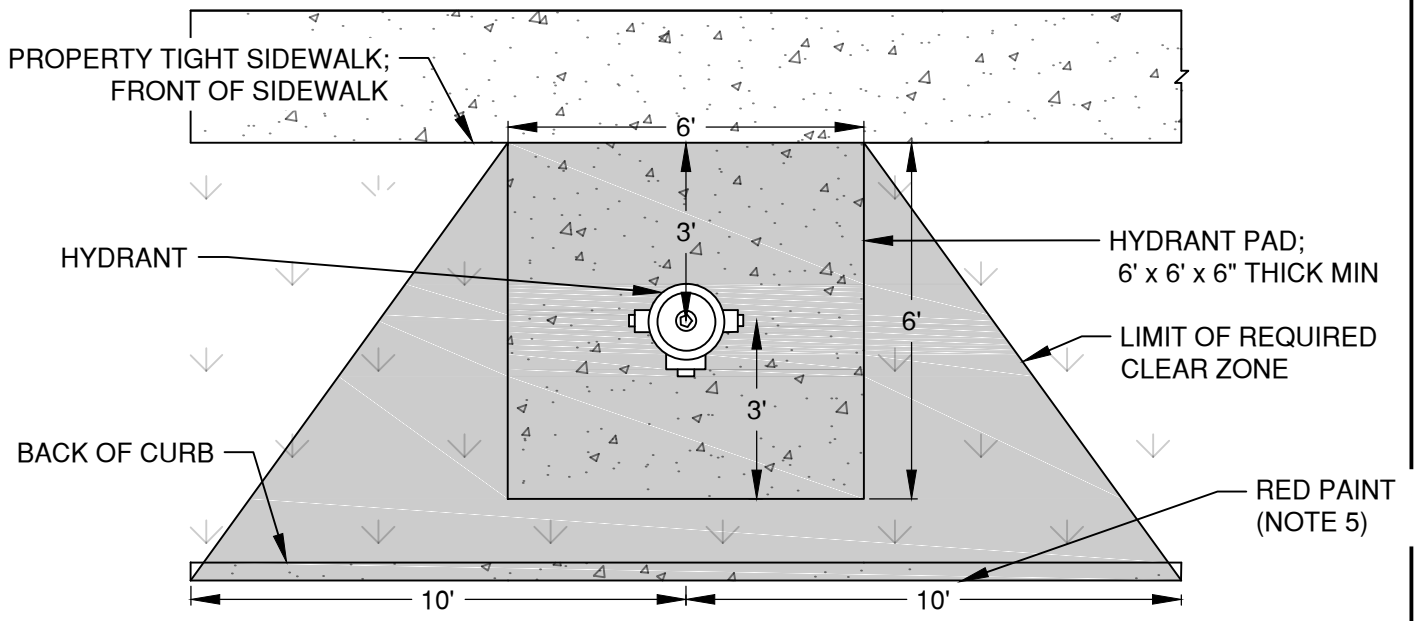

PROPERTY TIGHT SIDEWALK HYDRANT LOCATION AND CLEAR ZONE
PLAN VIEW

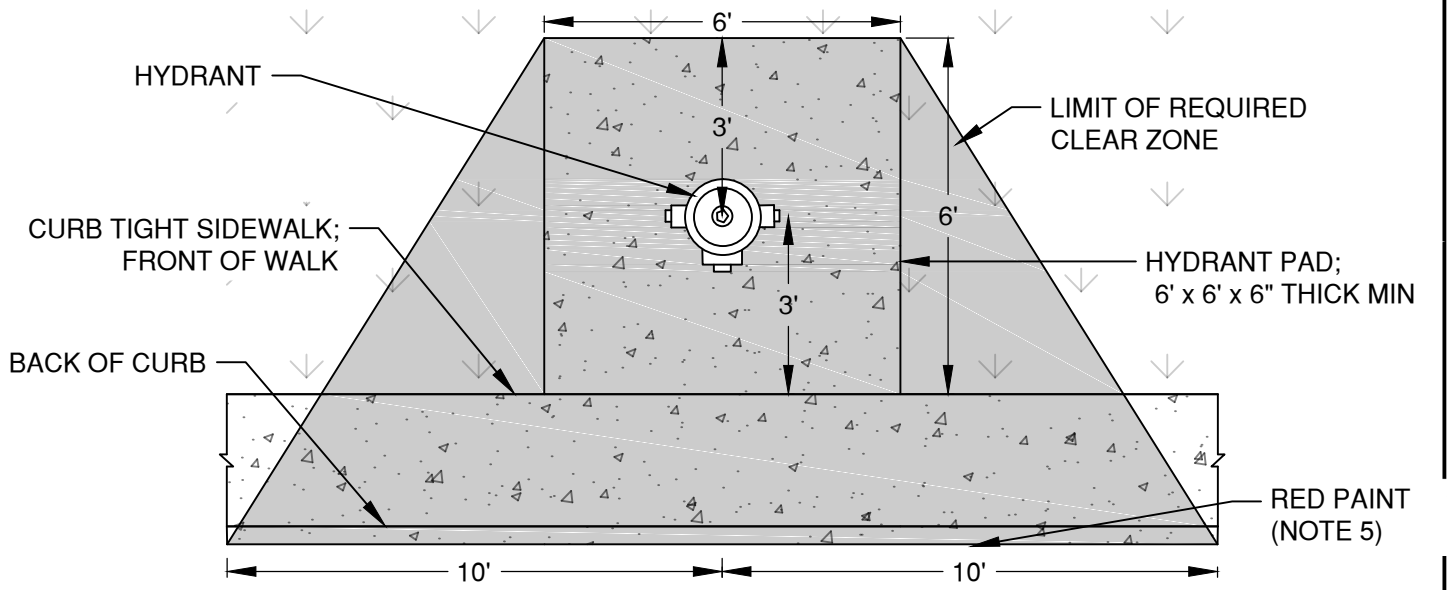

CURB TIGHT SIDEWALK HYDRANT LOCATION AND CLEAR ZONE
PLAN VIEW

NOTES:

1. THE CLEAR ZONE PROHIBITS PARKING, FENCES, TREES, RETAINING WALLS, OR OTHER STRUCTURES THAT COULD INTERFERE WITH OPERATION OF HYDRANT. GRASS, MULCH, BARKDUST, AND GROUND COVER IS PERMITTED.
2. PROPERTY OWNERS SHOULD BE AWARE THAT GROUND COVER COULD BE DAMAGED WHEN THE HYDRANT IS USED OR WHEN HYDRANT MAINTENANCE IS PERFORMED.
3. CONCRETE PADS ARE TO BE A MINIMUM OF 6" THICK AND BE POURED AND PLACED ON 2" MIN. COMPACTED BASE ROCK PER SECTION OSS 00400.00
4. THERE SHALL BE A MINIMUM 4 FOOT CLEAR TRAVEL WIDTH ON SIDEWALKS ADJACENT TO HYDRANTS.
5. THE CURB SHALL BE PAINTED RED FOR A TOTAL OF 20 FEET, CENTERED ON THE HYDRANT.

DRAWN LJC DIV WATER REV DATE	CITY OF BEND	CITY OF BEND STANDARD DRAWING 710 NW WALL ST., BEND, OREGON 97701 HYDRANT LOCATION AND CLEAR ZONE	SCALE NTS DATE 3/31/19 APPR STD DWG W-8

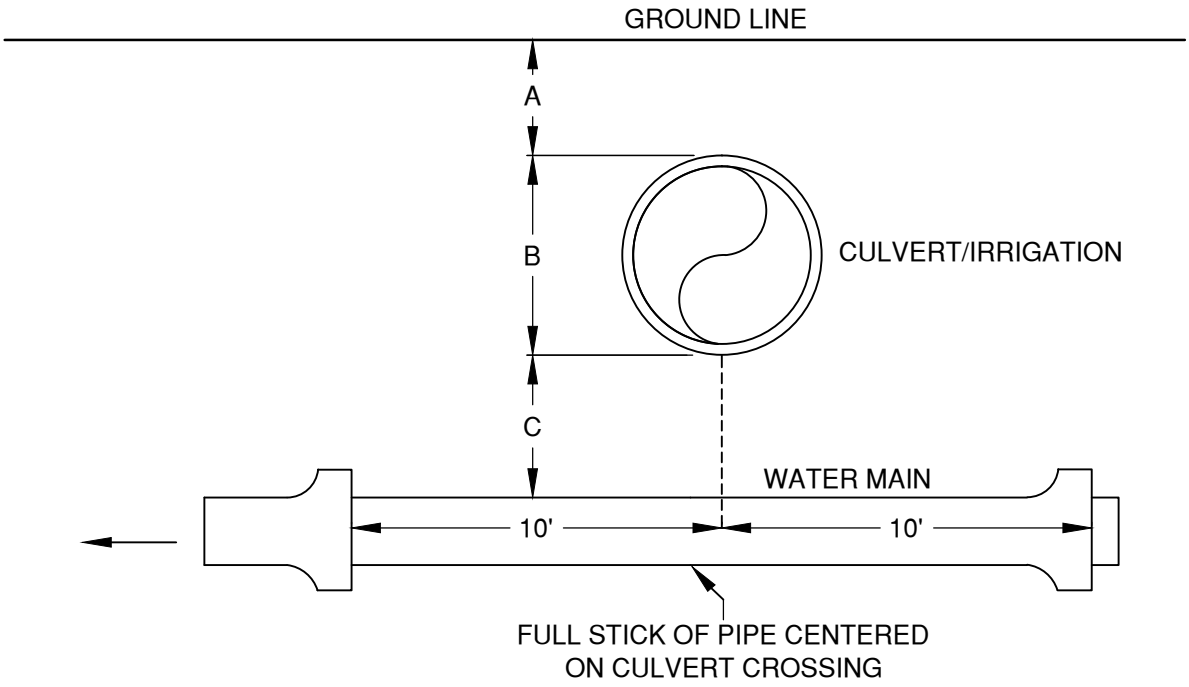

A	B	C
COVER FROM CULVERT TO FINISH GRADE	CULVERT SIZE	SEPARATION CULVERT TO MAIN
12" OR LESS	6" THRU 12"	NOT LESS THAN 18"
12" OR MORE	6" THRU 12"	NOT LESS THAN 12"
12" OR LESS	14" THRU 24"	NOT LESS THAN 30"
12" OR MORE	14" THRU 24"	NOT LESS THAN 24"
	GREATER THAN 24"	NOT LESS THAN 36"

DRAWN LJC	CITY OF BEND	CITY OF BEND STANDARD DRAWING 710 NW WALL ST., BEND, OREGON 97701	SCALE NTS
DIV WATER			DATE 12/1/17
REV DATE			APPR
		SEPARATION OF WATER LINE TO IRRIGATION CULVERTS	STD DWG W-9

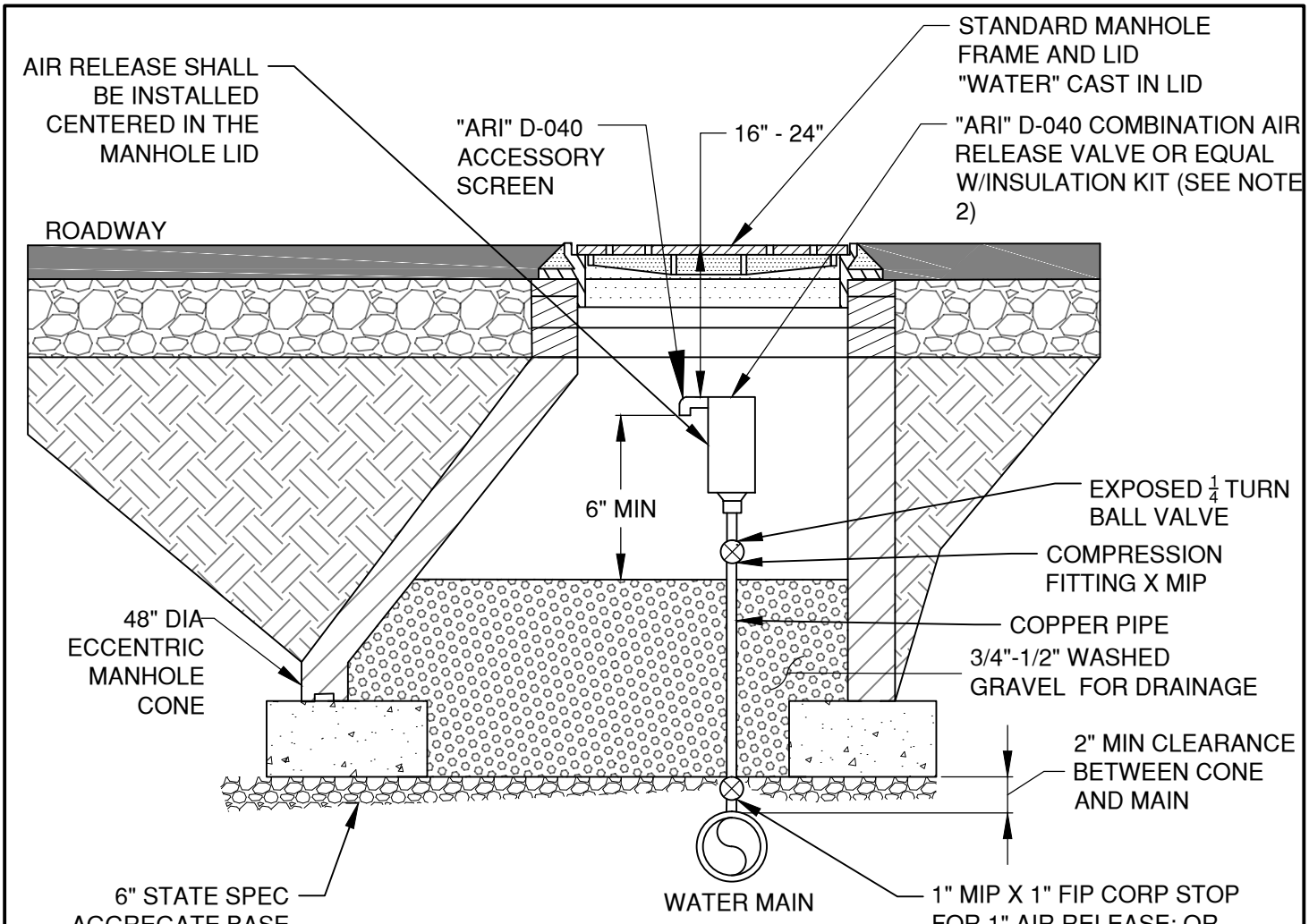

PROFILE VIEW

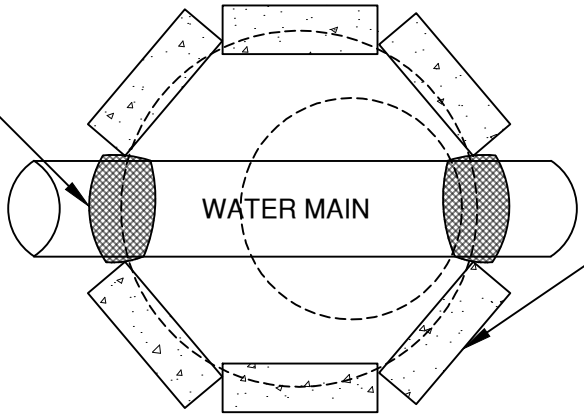

PLAN VIEW

GENERAL NOTES:

1. AIR RELEASE OR COMBINATION VALVES SHALL BE INSTALL AT ALL HIGH POINTS. WHERE THE HIGH POINT IS AT THE TOP OF A LONG ASCENT (1,250 FEET+) A COMBINATION AIR/VACUUM VALVE SHALL BE INSTALLED.
2. 1" AIR RELEASE VALVE TO BE USED ON WATER MAINS LESS THAN 12" IN DIAMETER. 2" AIR RELEASE VALVE TO BE USED ON WATER MAINS GREATER THAN OR EQUAL TO 12" IN DIAMETER.

DRAWN LJC	CITY OF BEND	CITY OF BEND	SCALE NTS
DIV WATER		STANDARD DRAWING	DATE 3/31/19
REV DATE		710 NW WALL ST., BEND, OREGON 97701	APPR
	CITY OF BEND	1" & 2" STANDARD AIR RELEASE VALVE - TRAFFIC AREA	STD DWG W-10

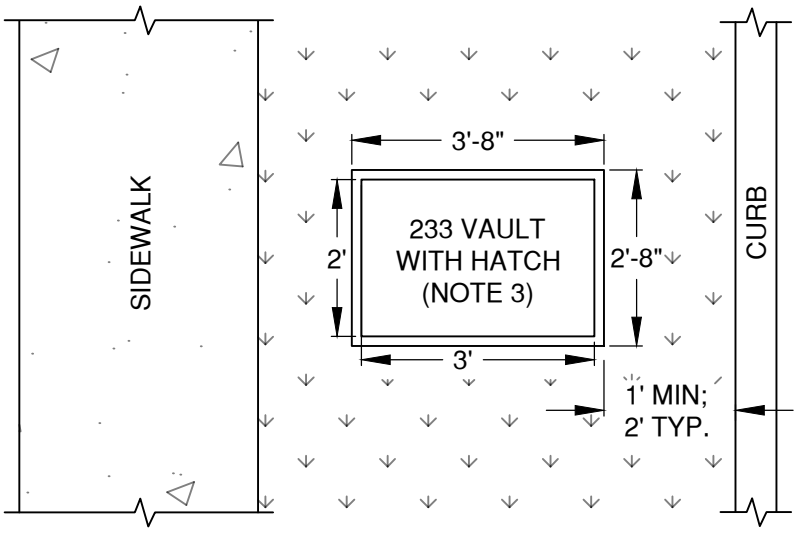

AIR RELEASE VALVE LOCATION
PLAN VIEW

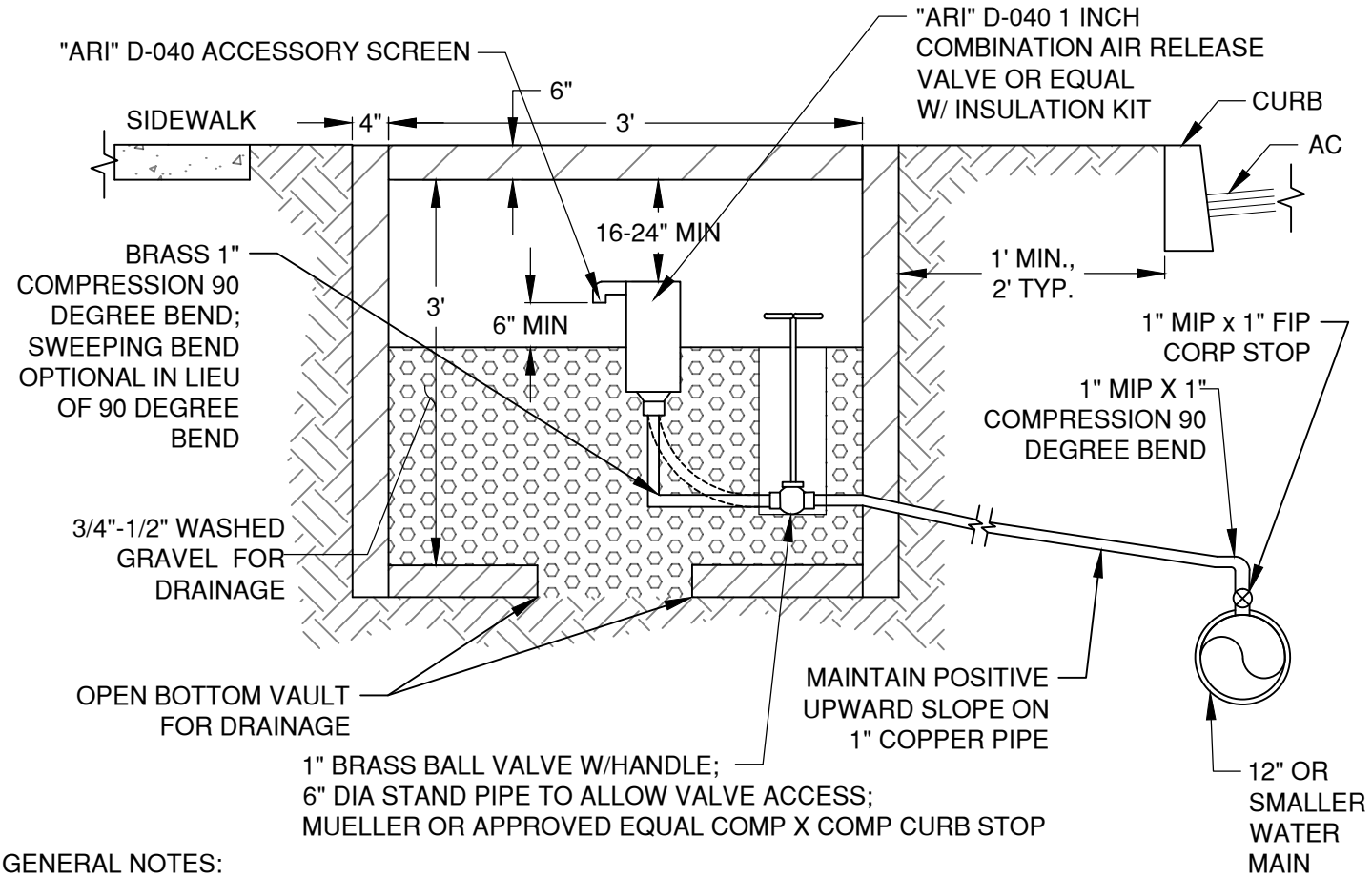

GENERAL NOTES:

1. AIR RELEASE OR COMBINATION VALVES SHALL BE INSTALL AT ALL HIGH POINTS. WHERE THE HIGH POINT IS AT THE TOP OF A LONG ASCENT (1,250 FEET+) A COMBINATION AIR/VACUUM VALVE SHALL BE INSTALLED.
2. IF 1" AIR RELEASE VALVE IS INSTALLED IN TRAFFIC AREA, INSTALL PER DRG W-10.
3. VAULT SHALL BE ADVANCED PRECAST PRODUCT 233 VAULT WITH 2'X3' HATCH AND OPEN BOTTOM, OR APPROVED EQUAL.

DRAWN LJC DIV WATER REV DATE	CITY OF BEND	CITY OF BEND STANDARD DRAWING 710 NW WALL ST., BEND, OREGON 97701	SCALE NTS DATE 3/31/19 APPR
		1" STANDARD AIR RELEASE VALVE	STD DWG W-10A

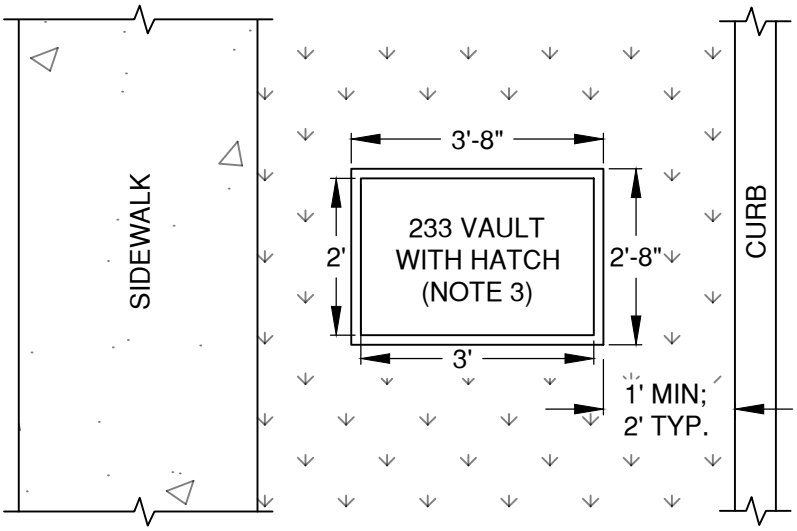

AIR RELEASE VALVE LOCATION
PLAN VIEW

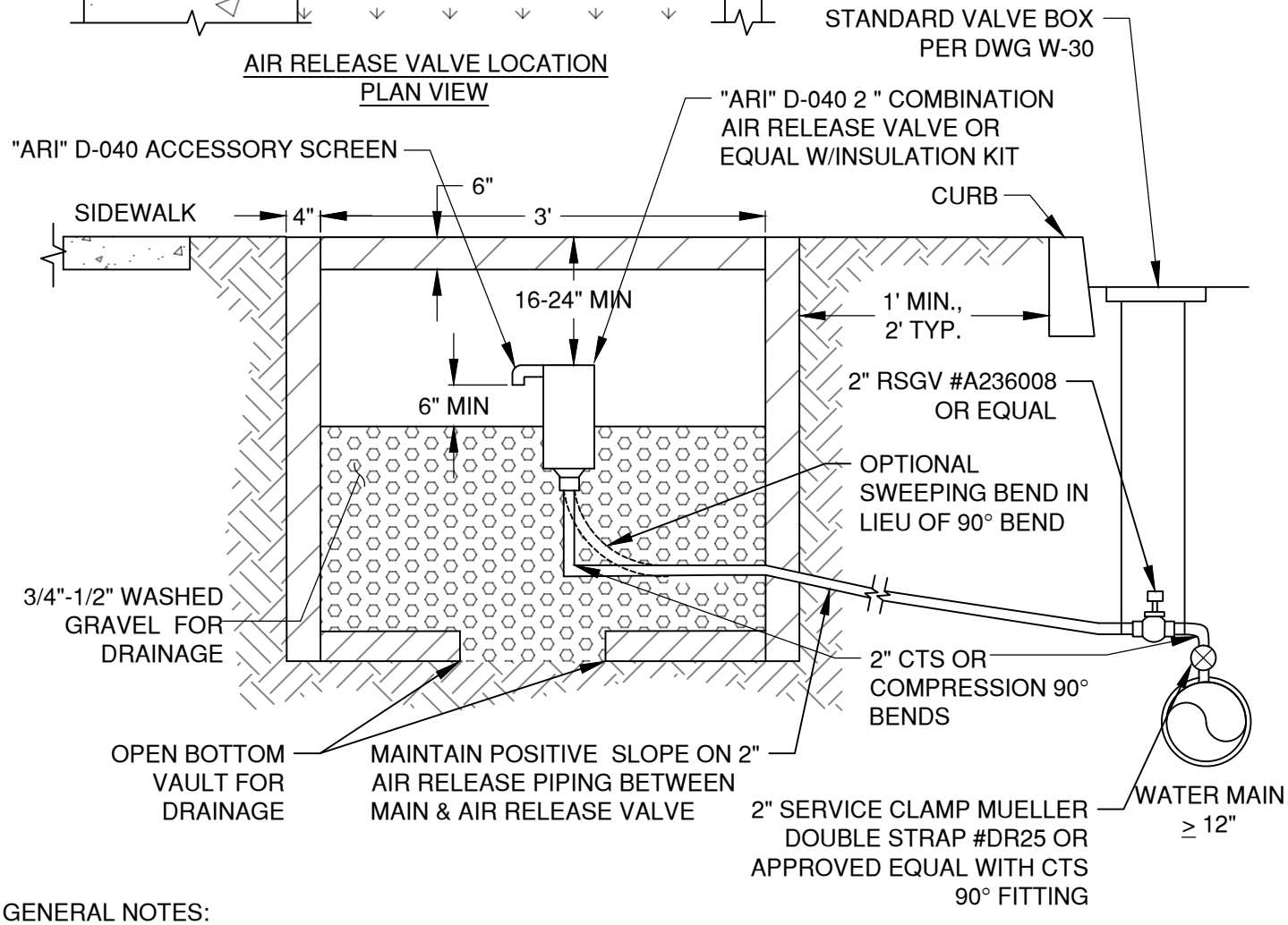

GENERAL NOTES:

1. AIR RELEASE OR COMBINATION VALVES SHALL BE INSTALL AT ALL HIGH POINTS. WHERE THE HIGH POINT IS AT THE TOP OF A LONG ASCENT (1,250 FEET+) A COMBINATION AIR/VACUUM VALVE SHALL BE INSTALLED.
2. USE DRG W-10B FOR 2" AIR RELEASE VALVES LOCATED IN TRAFFIC AREAS.
3. VAULT SHALL BE ADVANCED PRECAST PRODUCT 233 VAULT WITH 2'X3' HATCH AND OPEN BOTTOM, OR APPROVED EQUAL.

DRAWN LJC	CITY OF BEND	CITY OF BEND STANDARD DRAWING 710 NW WALL ST., BEND, OREGON 97701	SCALE NTS
DIV WATER			DATE 3/31/19
REV / DATE: 4/8/18			APPR
	CITY OF BEND	2" STANDARD AIR RELEASE VALVE	STD DWG W-10B

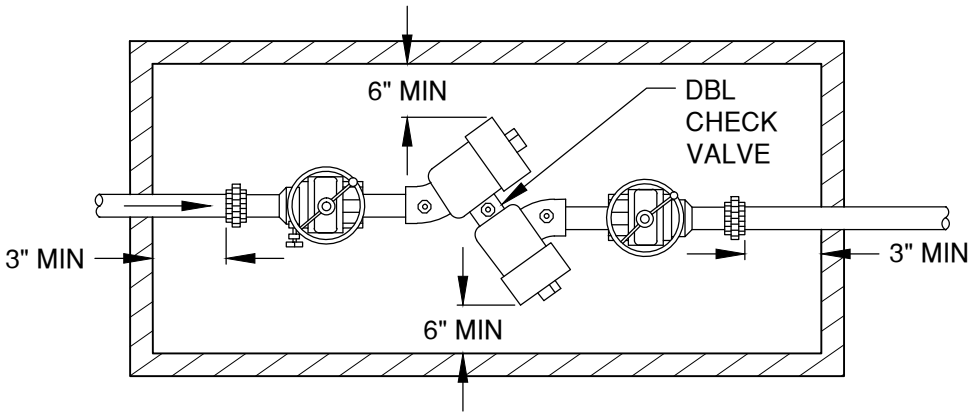

TOP VIEW

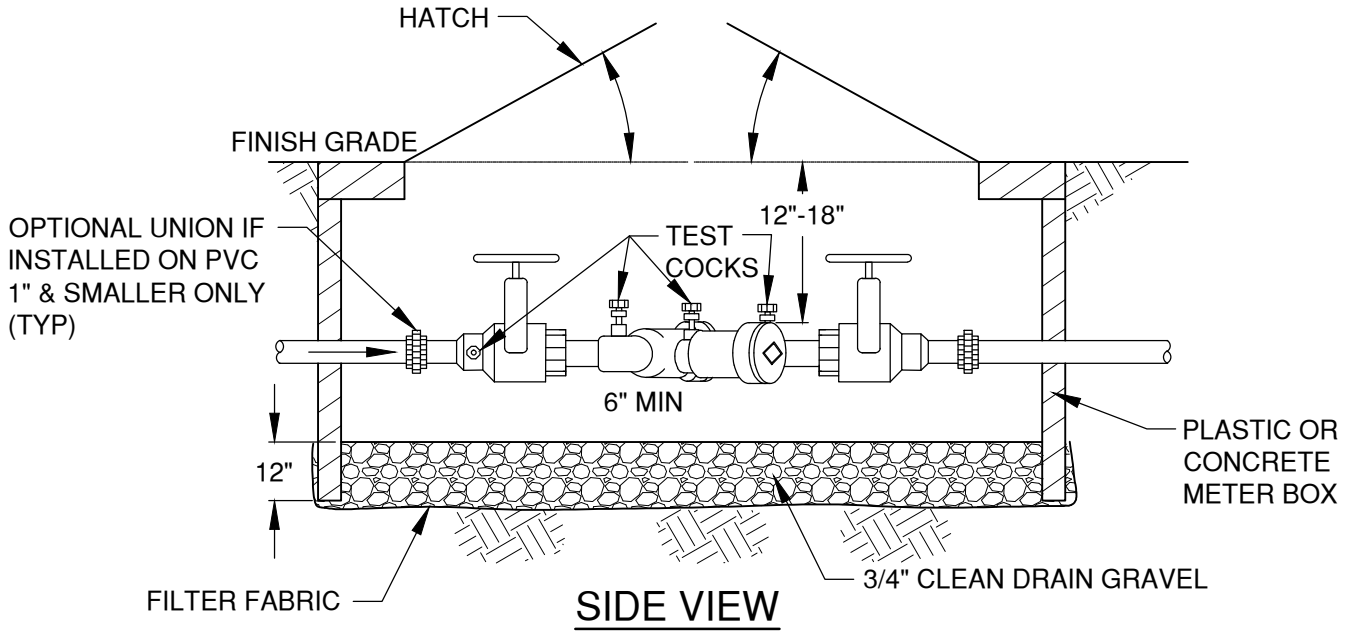

SIDE VIEW

NOTES:

1. DOUBLE CHECK VALVE ASSEMBLIES (DCVAs) MAY BE INSTALLED VERTICAL AS WELL AS HORIZONTAL PROVIDED THAT THE ASSEMBLY IS APPROVED FOR VERTICAL INSTALLATIONS
2. DCVAs MAY BE INSTALLED BELOW GRADE IN A VAULT PROVIDED WATER TIGHT, THREADED PLUGS ARE INSTALLED IN THE TEST COCKS, BUT THE ASSEMBLY SHALL NOT BE SUBJECT TO CONTINUOUS IMMERSION
3. BLOWOUT PORTS, WHEN REQUIRED MUST BE INSTALLED DOWNSTREAM OF LAST ASSEMBLY SHUTOFF
4. IF VAULT DEPTH EXCEEDS 4', USE OSHA APPROVED LADDER (SEE DRW NO W-6)
5. HATCH SIZE SELECTED TO MATCH VAULT DIMENSIONS

DRAWN LJC DIV WATER REV DATE	CITY OF BEND	CITY OF BEND STANDARD DRAWING 710 NW WALL ST., BEND, OREGON 97701 TYPICAL DCVA INSTALLATIONS 2" AND SMALLER	SCALE NTS DATE 12/1/17 APPR STD DWG W-13

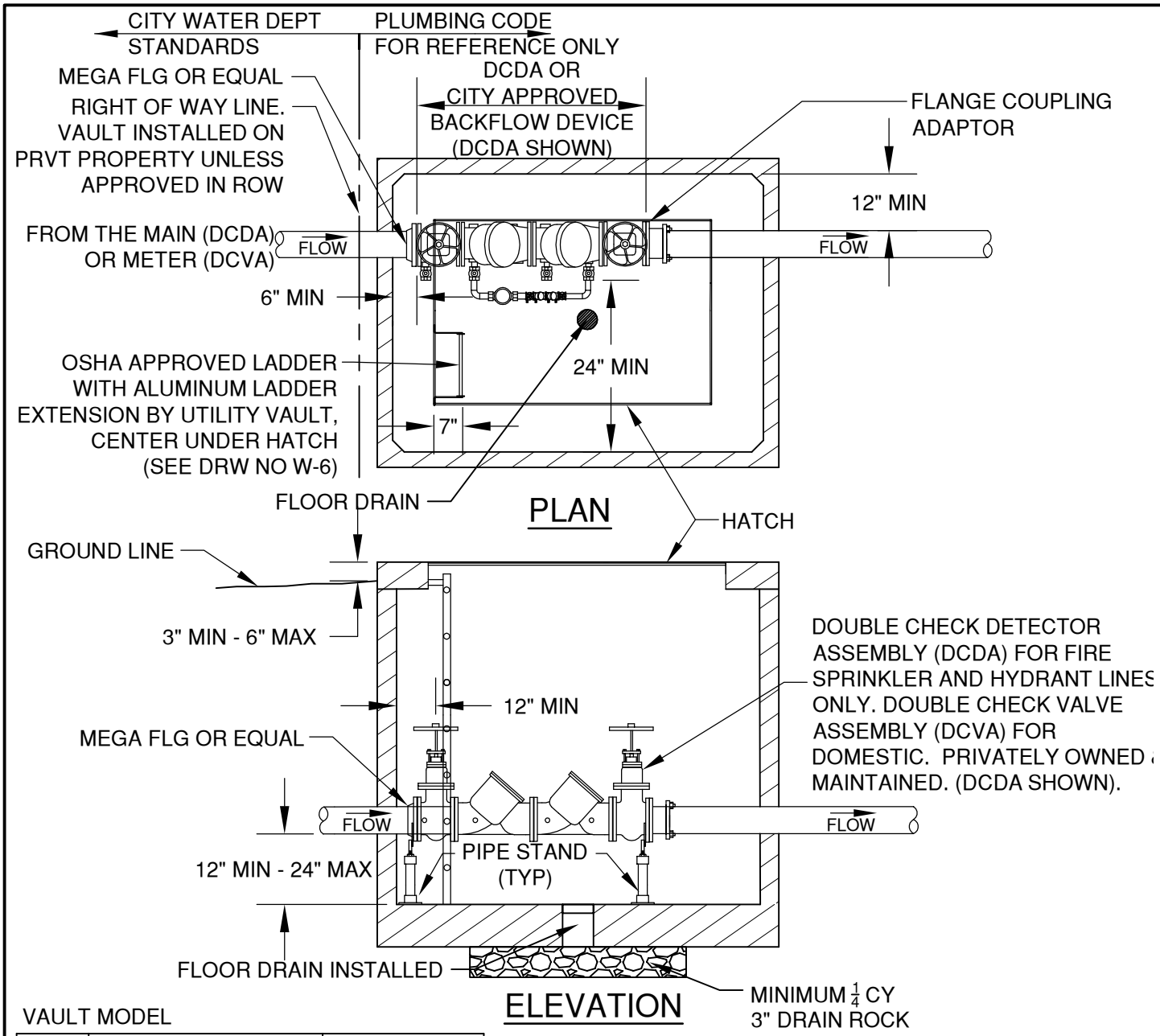

VAULT MODEL

PIPE SIZE	UTILITY VAULT OR EQUAL		BILCO DOOR OR EQUAL
	W/ FDC*	W/O FDC	
3		660-WA	J-5AL
4	676-WA	577-WA	J-5AL
6	687-WA	676-WA	J-5AL
8	5106-LA	687-WA	JD-3AL
10	5106-LA	5106-LA	JD-3AL

* FOR FIRE SPRINKLER VAULTS, REFER TO W-13B. FIRE SPRINKLER VAULTS INSTALLED IN RIGHT OF WAY OR UTILITY EASEMENT ONLY WHEN APPROVED BY CITY ENGINEER

NOTES:

1. ENGINEER TO PROVIDE RESTRAIN DETAIL FOR ALL PIPE ENTERING & EXITING VAULT
2. CONTRACTOR TO SEAL ALL OPENINGS IN VAULT WITH NON-SHRINK GROUT PRIOR TO BACKFILLING
3. CONDUIT BROUGHT TO VAULT FOR PUMP POWER AND DETECTOR WIRING.
4. ENGINEER OF RECORD DESIGN TO BE PROVIDED WITH PERMIT.
5. VAULT AND LID TO BE TRAFFIC RATED
6. ALL FIRE LINES SHALL HAVE THE VAULT & DOUBLE CHECK DETECTOR ASSEMBLY (DCDA) INSTALLED CONCURRENTLY FOR TESTING & DISINFECTION TO THE CITY MAIN.

DRAWN CJH	CITY OF BEND	CITY OF BEND	SCALE NTS
DIV WATER		STANDARD DRAWING	DATE 3/31/19
REV DATE		710 NW WALL ST., BEND, OREGON 97701	APPR
		2" & LARGER DOUBLE CHECK VALVE ASSEMBLY	STD DWG W-13A

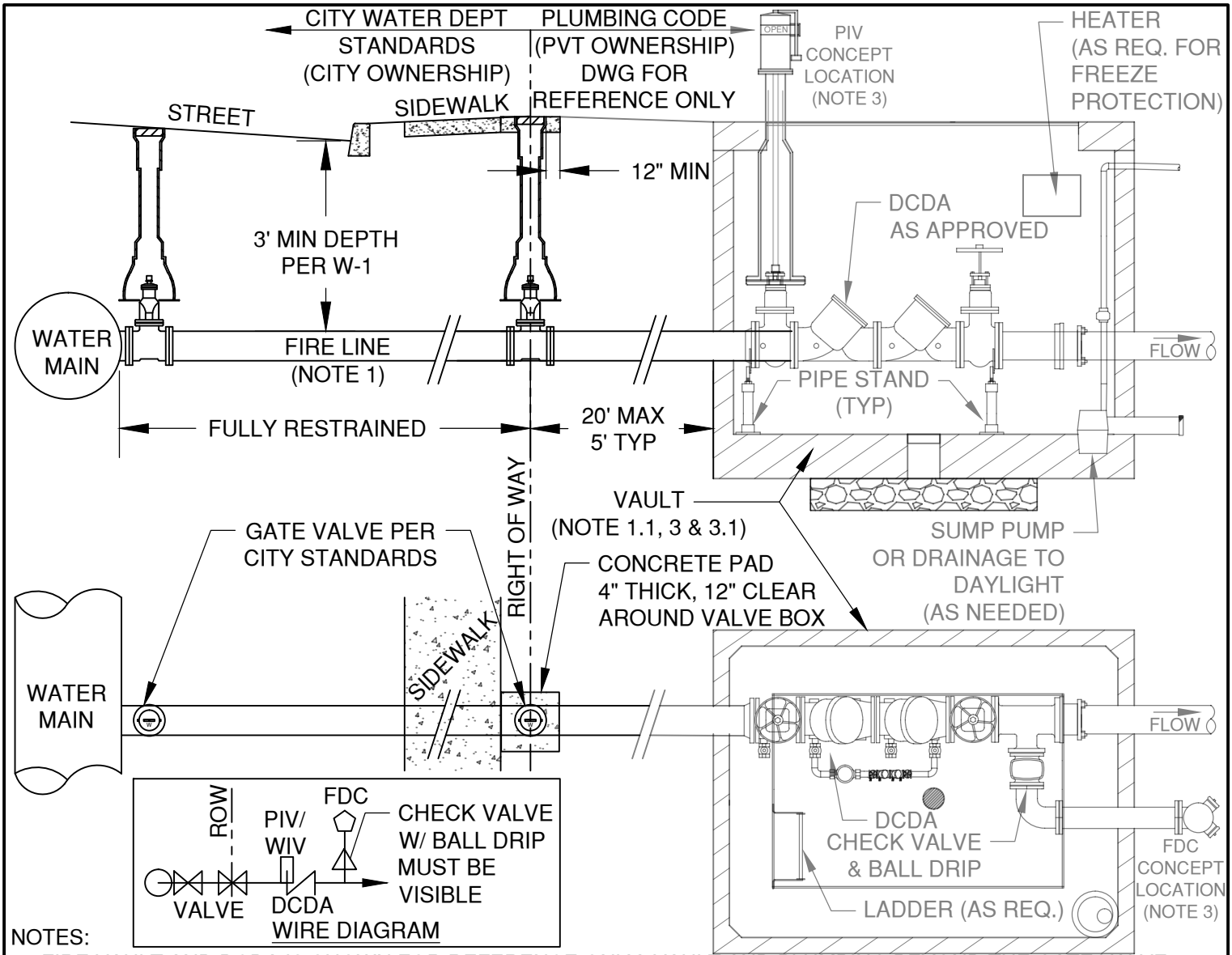

NOTES:

1. FIRE VAULT AND DCDA IS SHOWN FOR REFERENCE ONLY. VAULT AND PLUMBING BEYOND THE GATE VALVE SHALL BE INSTALLED PER PLUMBING CODE AND INSPECTED BY THE BUILDING DEPARTMENT.
   1.1. WHERE FIRE VAULT IS APPROVED BY CITY ENGINEER TO BE WITHIN THE RIGHT OF WAY OR PUBLIC EASEMENT, VAULT SIZES ON W-13A SHALL APPLY AND "FOR REFERENCE NOTES" ON THIS SHEET WOULD APPLY.
2. FIRE LINE TO BE 4" MIN DUCTILE IRON WATER MAIN PER CITY OF BEND SPECIFICATIONS. FIRE LINE TO BE SIZED BY ENGINEER UNDER A RIGHT OF WAY PERMIT.
3. VAULT TO BE SIZED BY ENGINEER IN CONFORMANCE TO BUILDING/FIRE/PLUMBING CODE, MEETING THE DOUBLE CHECK DETECTOR ASSEMBLY (DCDA) MANUFACTURER'S INSTALLATION SPECIFICATIONS.
   3.1. WHERE BUILDING IS WITHIN 20 FEET OF THE RIGHT OF WAY LINE, AND AS APPROVED BY THE BUILDING OFFICIAL, THE DCDA CAN BE WITHIN THE BUILDINGS MECHANICAL ROOM. ACCESS TO THE MECHANICAL ROOM TO BE PROVIDED BY AN EXTERIOR DOOR WITH KNOX BOX.
   3.2. VAULTS ARE TO BE PLACED OUT OF HARD SURFACES (SIDEWALKS, DRIVEWAYS/ROADWAYS,ECT.)
4. POST INDICATOR VALVE (PIV) AND FIRE DEPARTMENT CONNECTION (FDC) TO BE LOCATED IN CLEAR VIEW OF THE FRONTAGE STREET, WITH THE FDC LOCATED WITHIN AN ALLOWABLE DISTANCE FROM A HYDRANT. PIV AND FDC MAY BE MOUNTED ON THE BUILDING IN CONFORMANCE WITH THE FIRE CODE AND AS APPROVED. PIV AND FDC CAN BE MOUNTED OUTSIDE THE VAULT OR THROUGH THE VAULT LID PROVIDED THEY DON'T INTERFERE WITH VAULT ACCESS AND THE PENETRATIONS ARE GROUTED AND DON'T NEGATE THE STRUCTURAL INTEGRITY OF THE VAULT. PIV NOT TO BE USED IN-LIEU OF ISOLATION GATE VALVE AT PROPERTY LINE.
5. ALL ELECTRICAL TO VAULT AND PIV TO BE INSTALLED PER BUILDING AND FIRE CODE AS REQUIRED.

DRAWN CJH	CITY OF BEND	CITY OF BEND	SCALE NTS
DIV WATER		STANDARD DRAWING	DATE 3/31/19
REV DATE		710 NW WALL ST., BEND, OREGON 97701	APPR
		FIRE SPRINKLER LINE	STD DWG W-13B

DRAWING IS FOR REFERENCE ONLY

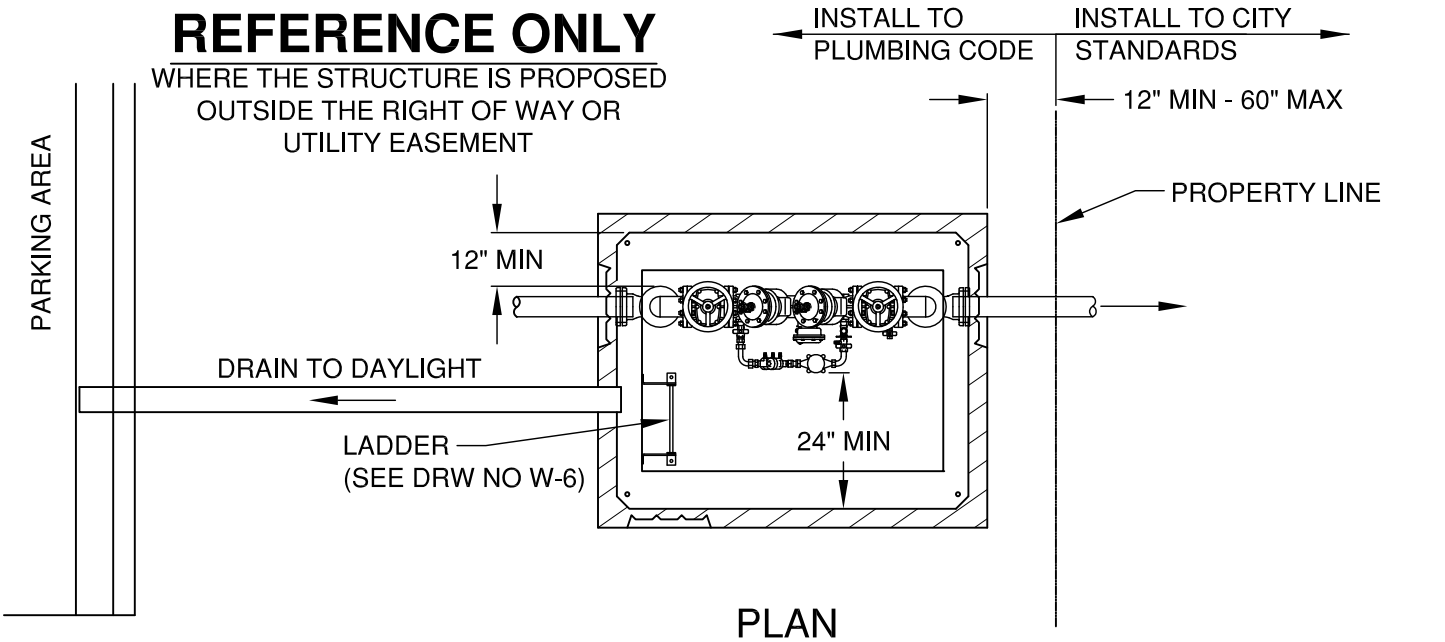

PLAN

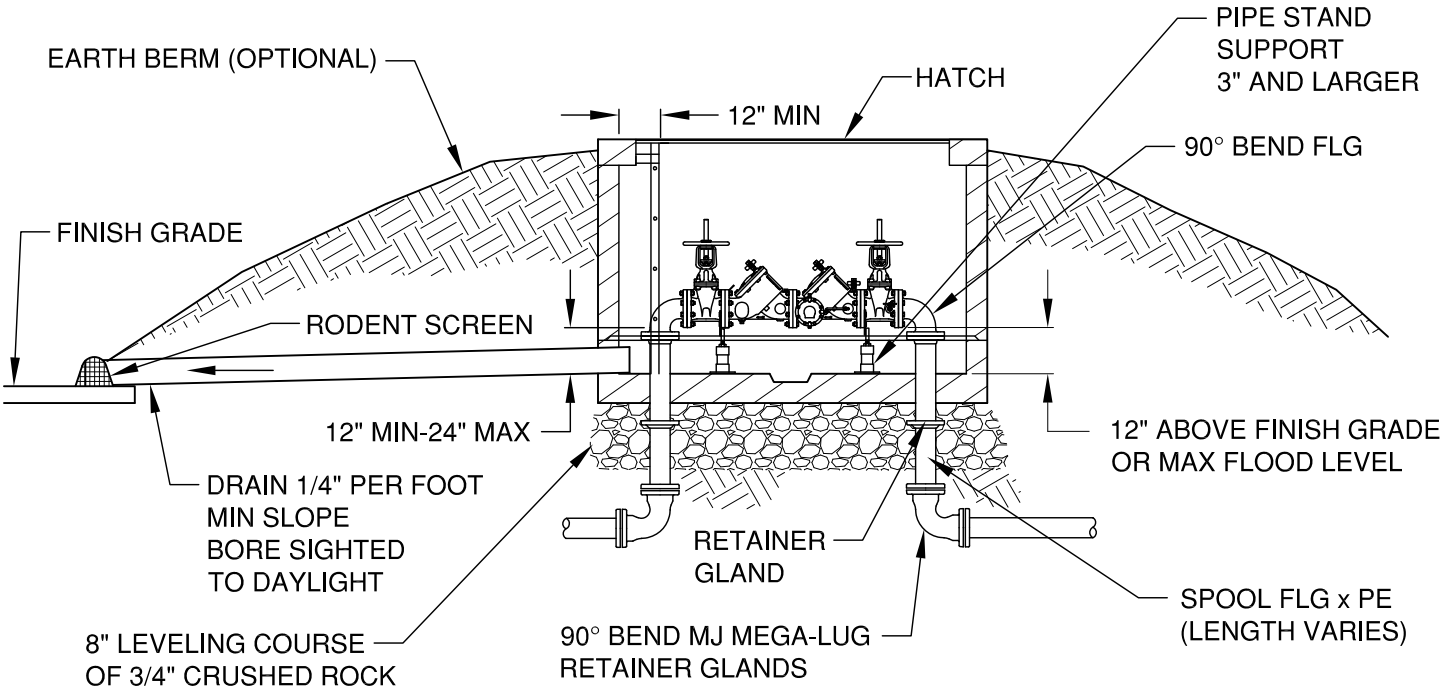

PROFILE

NOTES:

1. THIS DRAWING IS FOR REFERENCE ONLY. INSTALL PER PLUMBING CODE AND BUILDING DEPARTMENT REQUIREMENTS.
2. ENGINEER TO PROVIDE RESTRAINT DETAIL FOR ALL PIPE ENTERING & EXITING VAULT
3. CONTRACTOR TO SEAL ALL OPENINGS IN VAULT WITH NON-SHRINK GROUT PRIOR TO BACKFILLING
4. HIGH OR LOW HAZARD CONNECTIONS SHALL BE IDENTIFIED AND VERIFIED WITH CITY CROSS CONNECTION SPECIALIST

DRAWN LJC	CITY OF BEND	CITY OF BEND	SCALE NTS
DIV WATER	STANDARD DRAWING		DATE 12/1/17
REV / DATE	710 NW WALL ST., BEND, OREGON 97701		APPR
	2 1/2"-10" REDUCED PRESSURE BACKFLOW ASSEMBLY		STD DWG W-15

DRAWING IS FOR REFERENCE ONLY

WHERE THE STRUCTURE IS PROPOSED OUTSIDE THE RIGHT OF WAY OR UTILITY EASEMENT

VAULT SPECIFICATIONS

WATER LINE DIAMETER	MODEL
1"	UTILITY VAULT 3030-LA (OR EQUAL)
1-1/2" - 2"	UTILITY VAULT 3642-PUT (OR EQUAL)

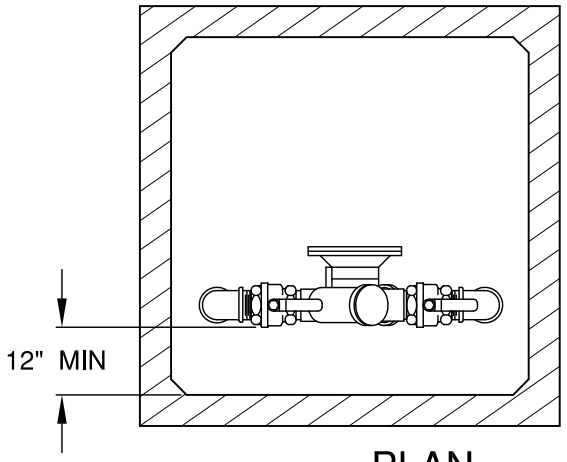

PLAN

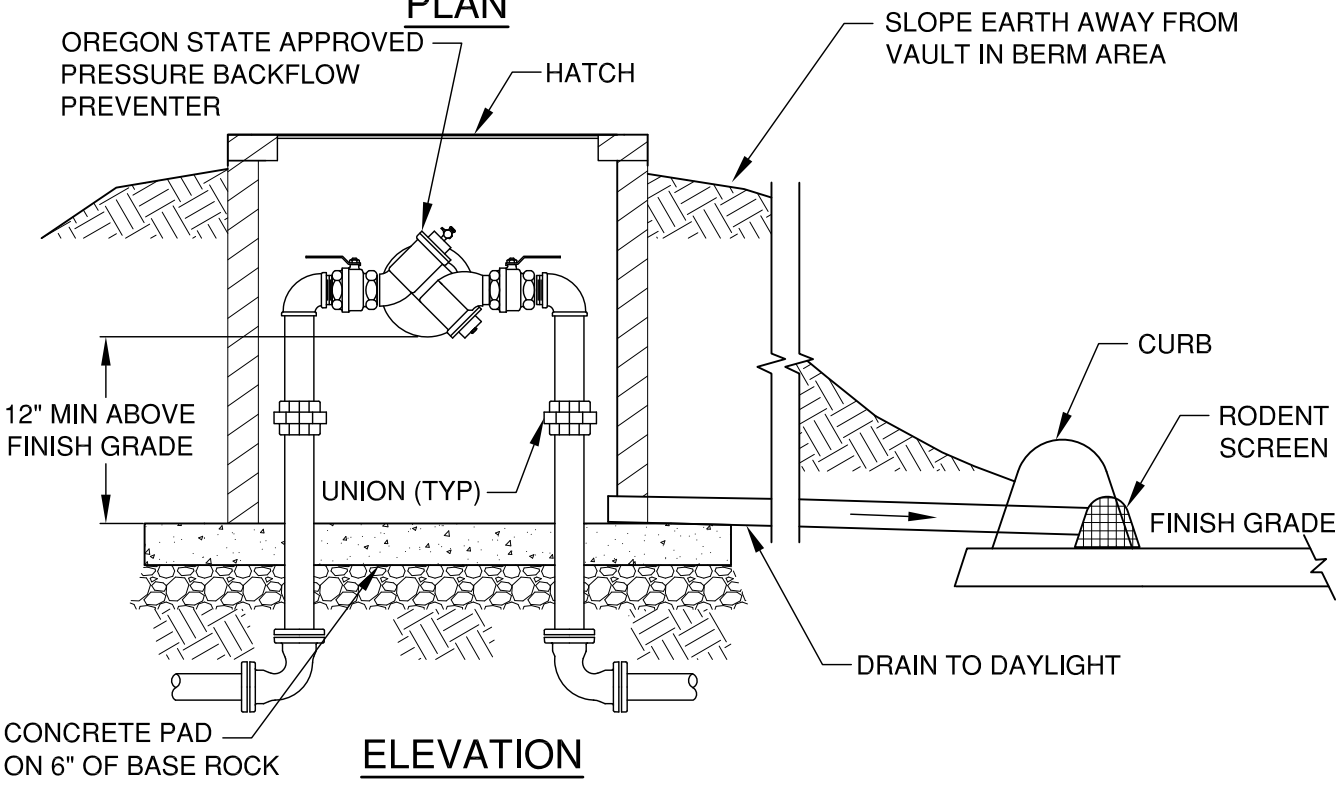

ELEVATION

NOTES:

1. THIS DRAWING IS FOR REFERENCE ONLY. INSTALL PER PLUMBING CODE AND BUILDING DEPARTMENT REQUIREMENTS.
2. REDUCED PRESSURE BACKFLOW ASSEMBLY TO BE LOCATED DIRECTLY DOWN STREAM OF WATER METER
3. BRASS, STAINLESS, OR PLASTIC PLUGS TO BE INSTALLED IN TEST COCKS IF BELOW GROUND INSTALLATION
4. HIGH OR LOW HAZARD CONNECTIONS SHALL BE IDENTIFIED AND VERIFIED WITH CITY CROSS CONNECTION SPECIALIST

DRAWN LJC	CITY OF BEND	CITY OF BEND	SCALE NTS
DIV WATER	STANDARD DRAWING		DATE 12/1/17
REV / DATE	710 NW WALL ST., BEND, OREGON 97701		APPR
	1"-2" REDUCED PRESSURE BACKFLOW ASSEMBLY		STD DWG W-15A

DRAWING IS FOR REFERENCE ONLY

WHERE THE STRUCTURE IS PROPOSED OUTSIDE THE RIGHT OF WAY OR UTILITY EASEMENT

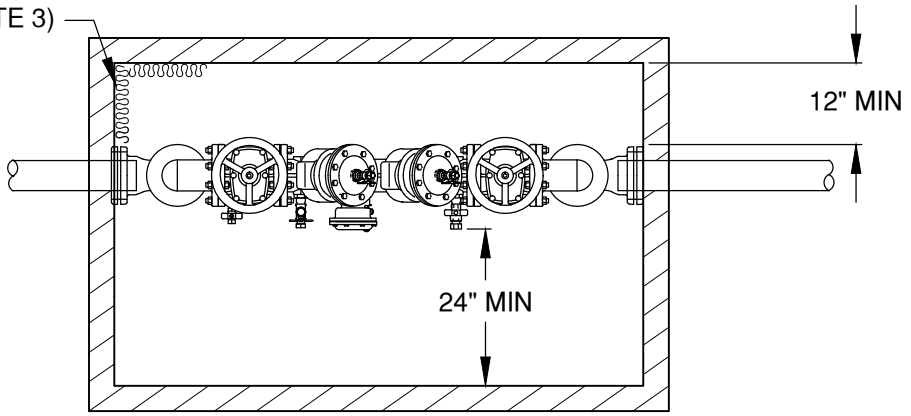

PLAN

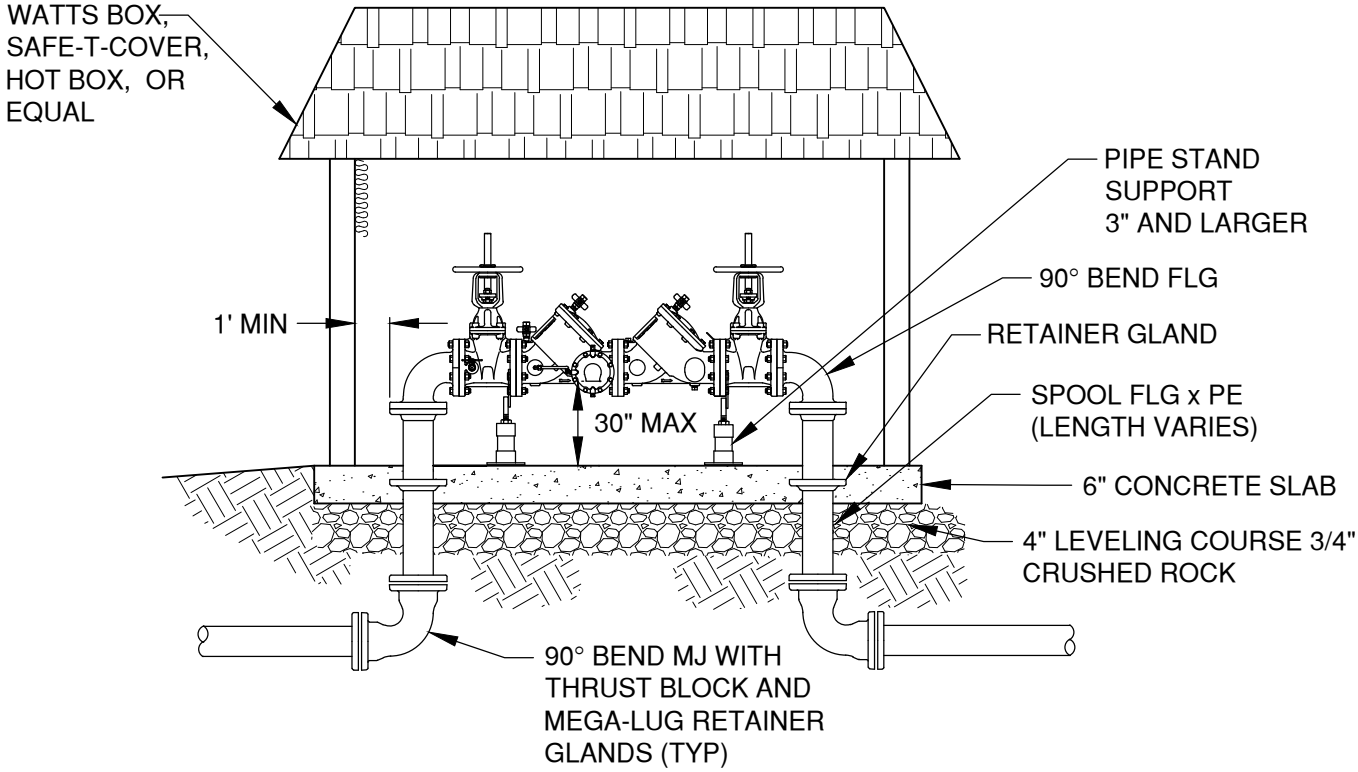

PROFILE

NOTES:

1. THIS DRAWING IS FOR REFERENCE ONLY. INSTALL PER PLUMBING CODE AND BUILDING DEPARTMENT REQUIREMENTS OR AS BY MANUFACTURER'S REQUIREMENTS.
2. REDUCED PRESSURE BACKFLOW ASSEMBLY SHALL BE INSTALLED HORIZONTALLY UNLESS APPROVED FOR OTHER ORIENTATION
3. ALL CLEARENCES APPLY TO OUTSIDE, IN-BUILDING, AND VAULT INSTALLATIONS
4. STRUCTURE TO BE INSULATED AND HAVE A HEAT SOURCE TO KEEP ENCLOSURE AT40°F (NFPA 13-4-5.4.1.1)
5. ENCLOSURE SHALL INCLUDE A BORE SIGHTED DRAIN TO DAYLIGHT CAPABLE OF DRAINING A FULL RELIEF VALVE DISCHARGE. MAKE/MODEL/SIZE WILL DICTATE THE SIZE OF THE ENCLOSURE.
6. ALL ASSEMBLIES 2 1/2" AND LARGER SHALL BE FLANGED
7. HIGH OR LOW HAZARD CONNECTIONS SHALL BE IDENTIFIED AND VERIFIED WITH CITY CROSS CONNECTION SPECIALIST

DRAWN LJC DIV WATER REV DATE	CITY OF BEND	CITY OF BEND STANDARD DRAWING 710 NW WALL ST., BEND, OREGON 97701 2 1/2" + REDUCED PRESSURE BACKFLOW ASSEMBLY	SCALE NTS DATE 3/31/19 APPR STD DWG W-15B

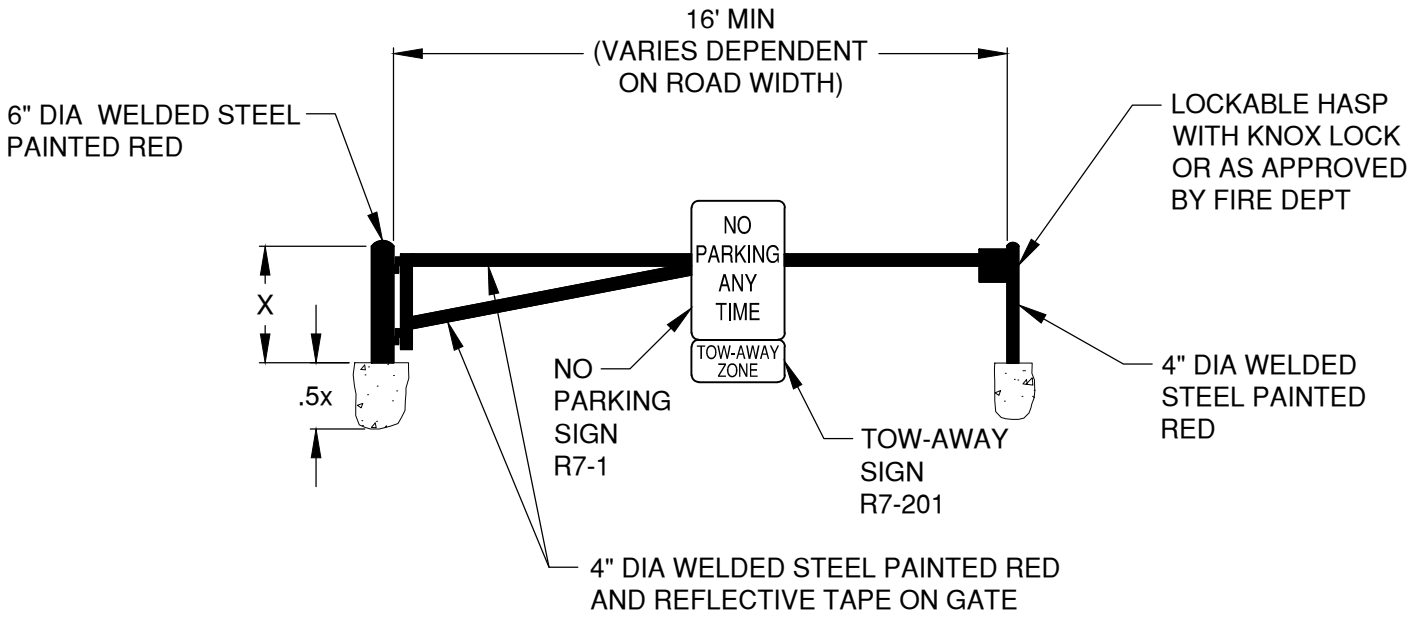

FIRE ACCESS GATE

DRAWN LJC	CITY OF BEND	CITY OF BEND STANDARD DRAWING 710 NW WALL ST., BEND, OREGON 97701	SCALE NTS
DIV ROADWAY			DATE 3/31/19
REV DATE			APPR
		FIRE GATE	STD DWG W-21

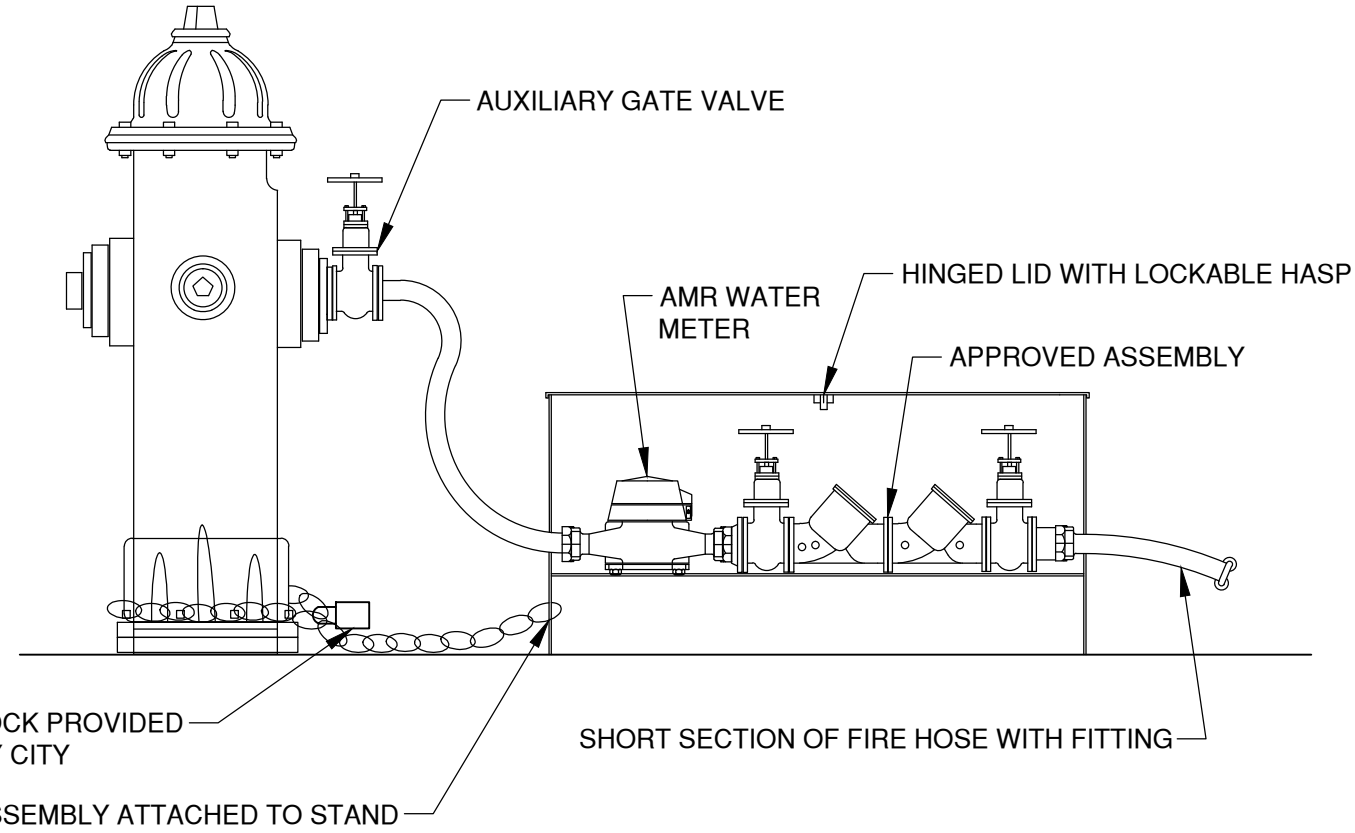

NOTES:

1. GATE VALVE, METER, REDUCED PRESSURE BACKFLOW ASSEMBLY & DOUBLE CHECK VALVE ASSEMBLY, & BOX WILL BE SUPPLIED & SET UP BY THE CITY WATER DEPT @ THE CONTRACTORS REQUEST AFTER OBTAINING A CITY HYDRANT PERMIT
2. HYDRANT PERMIT HOLDER TO PROTECT THE ENTIRE UNIT FROM FREEZING
3. BACKFLOW ASSEMBLY MUST BE TESTED IF UNIT IS MOVED TO ANOTHER LOCATION.

DRAWN	CITY OF BEND	CITY OF BEND STANDARD DRAWING 710 NW WALL ST., BEND, OREGON 97701	SCALE NTS
DIV WATER			DATE 12/1/17
REV / DATE			APPR
		HYDRANT PERMIT/FILLING TANKER TRUCK	STD DWG W-22

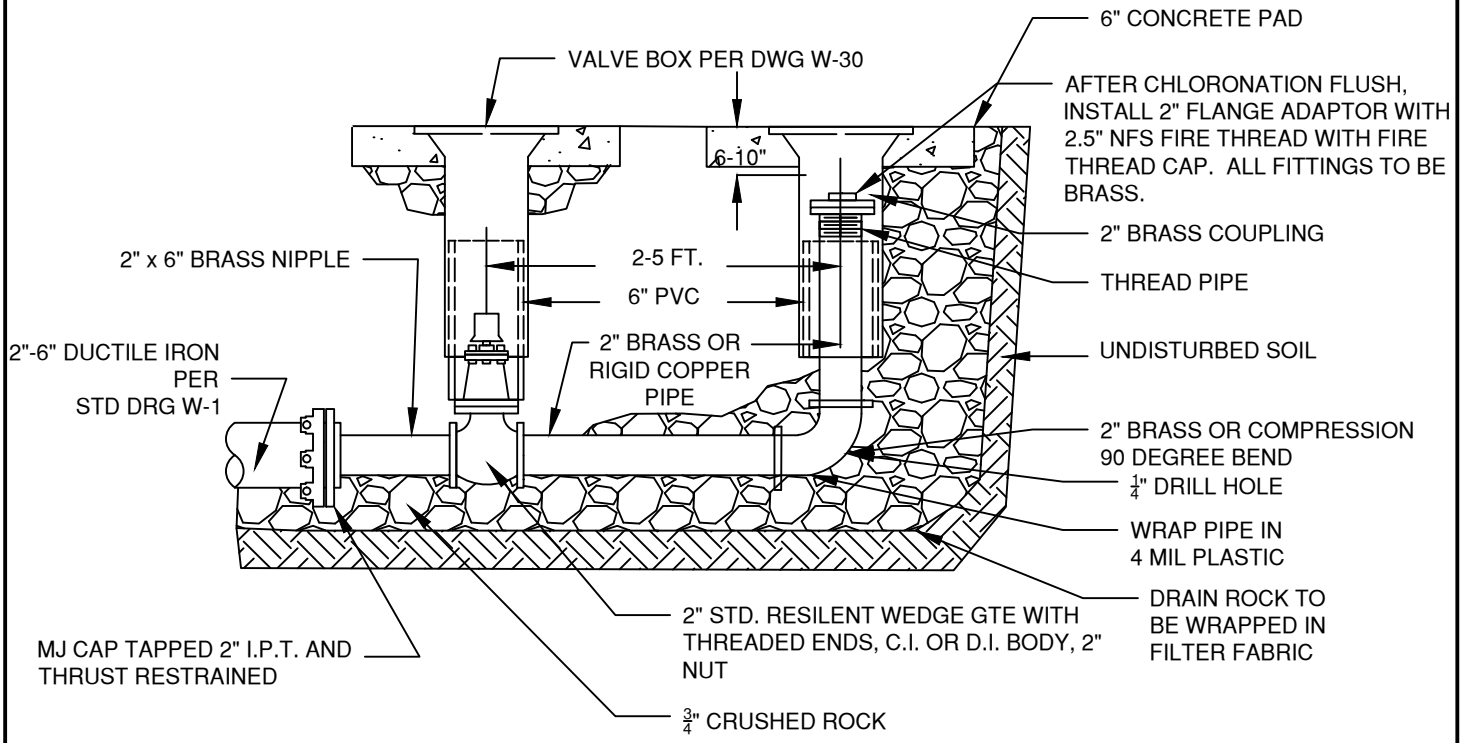

NOTES:

1. USE CITY STANDARD VALVE BOXES, LIDS, AND 6" PVC EXTENSION.
2. BLOW-OFF UNIT SHALL BE BACKFILLED WITH 3/4" MINUS CRUSHED ROCK AND COMPACTED TO 95% OF MAX. DENSITY AS DETERMINED BY AASHTO T-180.
3. ON TEMPORARY BLOW-OFFS ONLY, AN MJ CAP TAPPED 4" OR 6" MAY BE SUBSTITUTED FOR REDUCER.
4. TEMPORARY BLOW-OFF IS ONE REMOVED AT THE END OF WATER LINE TESTING AND INSTALLATION AND PRIOR TO PROJECT PAVING. A PERMANENT BLOW-OFF REMAINS ON THE PROJECT AFTER ACCEPTANCE.
5. PLACE BLOW-OFF STANDPIPE 3' INSIDE ROW LINE AT THE END OF STREET (2' FROM BARRICADE).
6. USE CITY STANDARD VALVE BOX, LID, AND 6" PVC EXTENSION FOR BLOW-OFF VALVE.
7. BLOW OFF RISER TO BE ONE CONTINUOUS PIECE.
8. USE EBAA IRON "MEGALUG" OR APPROVED EQUAL RETAINER GLAND ON MJ CAP. RESTRAIN PER ENGINEER.
9. 2" PVC PLUG WITH SQUARE NUT TO BE HAND TIGHTENED ONLY.

DRAWN LJC	CITY OF BEND	CITY OF BEND	SCALE NTS
DIV WATER		STANDARD DRAWING	DATE 3/31/19
REV / DATE		710 NW WALL ST., BEND, OREGON 97701	APPR
		STANDARD 2" BLOW-OFF ASSEMBLY	STD DWG W-23

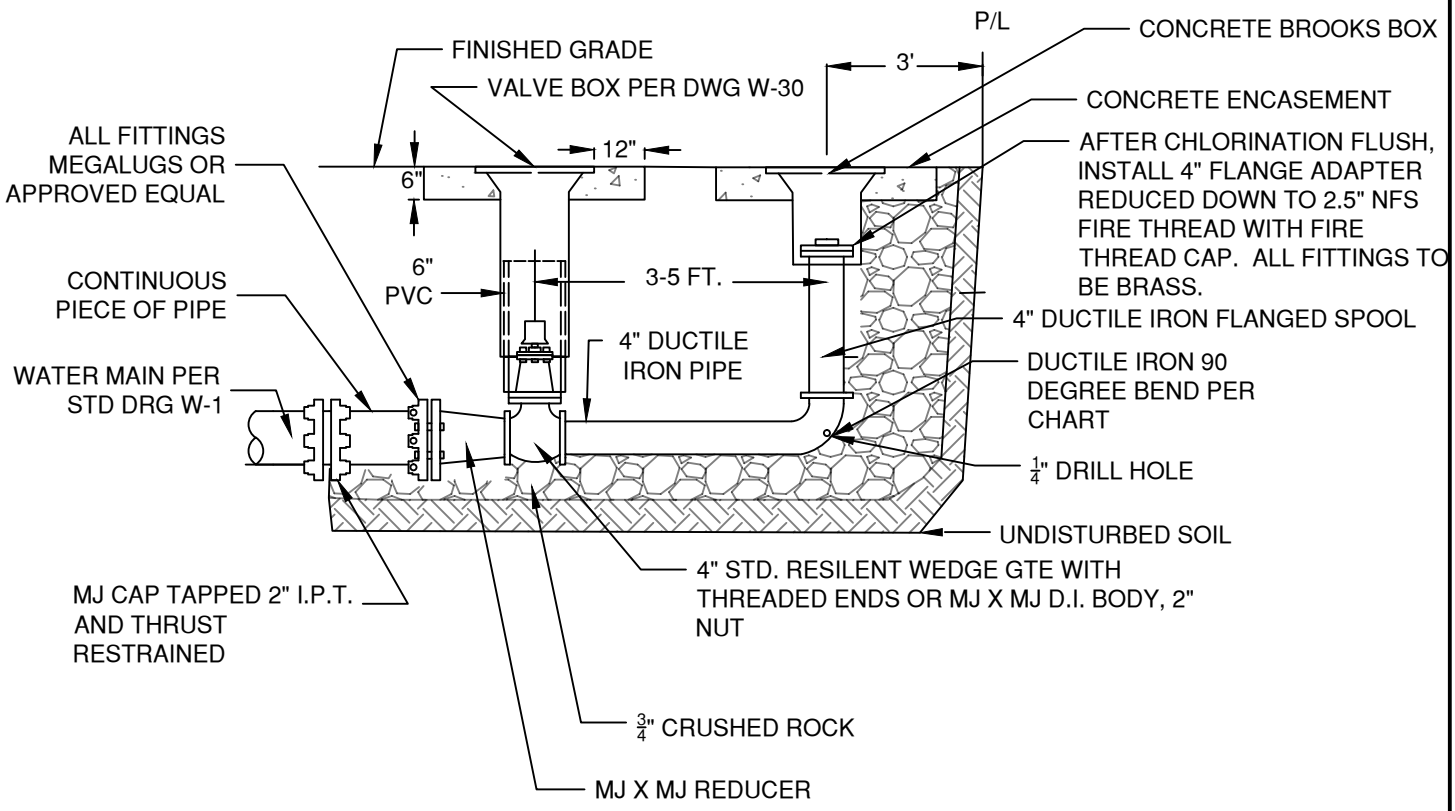

BLOW OFF SIZES REQUIRED	
MAIN SIZE	BLOW OFF SIZE
6" AND BELOW	2" (SEE DWG W-23)
8" - 12"	4"
ABOVE 12"	HYDRANT

NOTES:

1. USE CITY STANDARD VALVE BOXES, AND LIDS.
2. BLOW-OFF UNIT SHALL BE BACKFILLED WITH 3/4" MINUS CRUSHED ROCK AND COMPACTED TO 95% OF MAX. DENSITY AS DETERMINED BY AASHTO T-180.
3. ON TEMPORARY BLOW-OFFS ONLY, AN MJ CAP TAPPED 4" OR 6" MAY BE SUBSTITUTED FOR REDUCER.
4. TEMPORARY BLOW-OFF IS ONE REMOVED AT THE END OF WATER LINE TESTING AND INSTALLATION AND PRIOR TO PROJECT PAVING. A PERMANENT BLOW-OFF REMAINS ON THE PROJECT AFTER ACCEPTANCE.
5. PLACE BLOW-OFF STANDPIPE 3' INSIDE ROW LINE AT THE END OF STREET (2' FROM BARRICADE).
6. USE CITY STANDARD VALVE BOX, LID, AND 6" PVC EXTENSION FOR BLOW-OFF VALVE.
7. BLOW OFF RISER TO BE ONE CONTINUOUS PIECE.
8. USE EBAA IRON "MEGALUG" OR APPROVED EQUAL RETAINER GLAND ON MJ CAP. RESTRAIN PER ENGINEER.

DRAWN LJC	CITY OF BEND	CITY OF BEND STANDARD DRAWING 710 NW WALL ST., BEND, OREGON 97701	SCALE NTS
DIV WATER			DATE 3/31/19
REV / DATE: 1			APPR
		4" BLOW-OFF DETAIL	STD DWG W-24

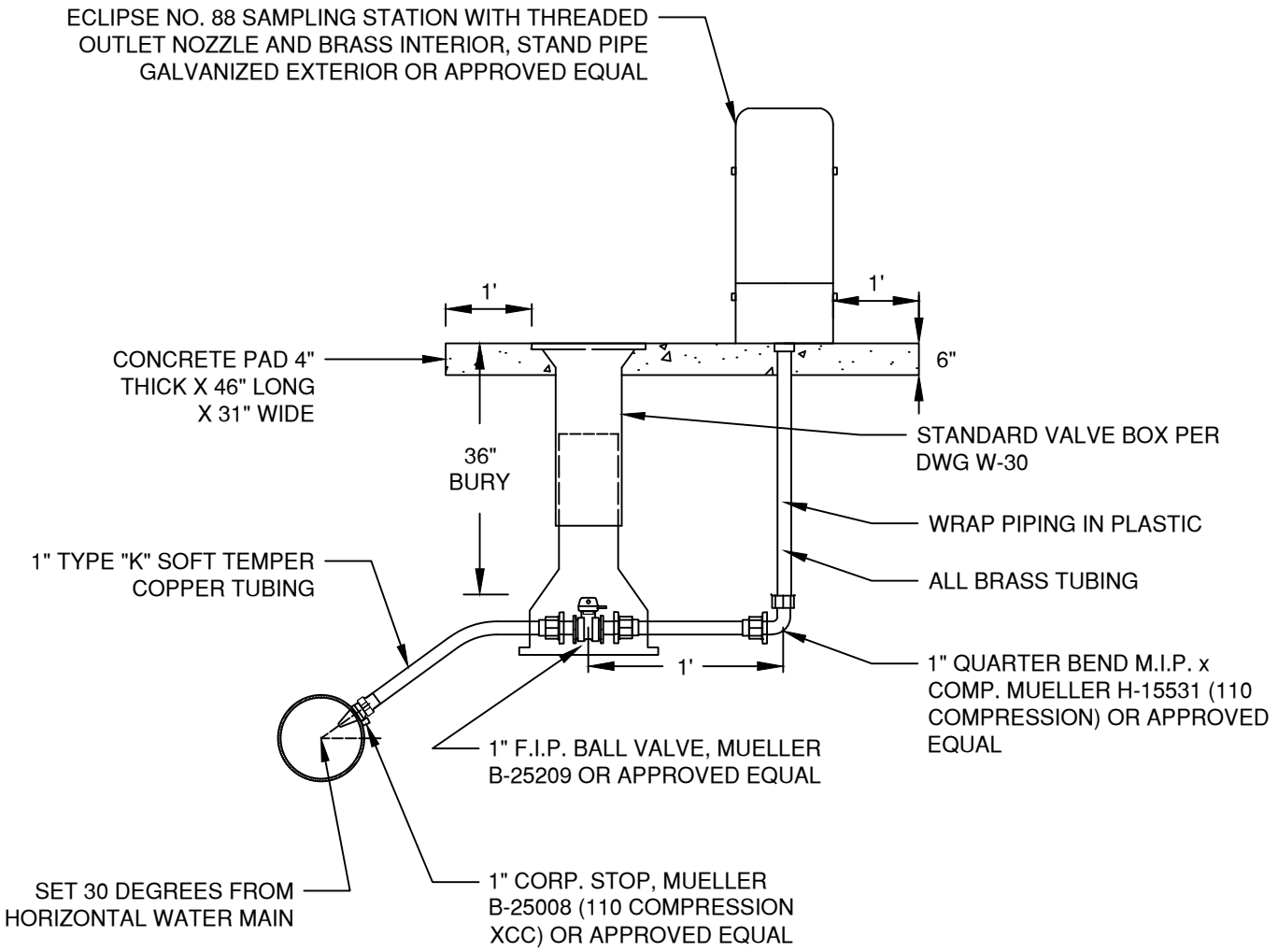

NOTES:

1. ALL PIPE AND STRUCTURES SHALL BE BACKFILLED WITH SCREENED MAX $\frac{3}{4}$" MINUS CRUSHED ROCK COMPACTED TO MIN. 95% OF MAX. DENSITY PER AASHTO T-180.
2. SET STATION AT LOT LINE UNLESS OTHERWISE SPECIFIED.
3. WHEN CROSSING, CATHODICALLY PROTECTED SYSTEM, INSTALL PVC SLEEVE PER DETAIL 503.
4. WHERE NO SIDEWALK EXISTS, PLACE CONC. PAD AS SHOWN. WHERE SIDEWALKS EXIST, PLACE MIN. 12" AROUND BACK OF SAMPLE STA. AND INCORPORATE INTO NEW SIDEWALK POUR.

DRAWN LJC		CITY OF BEND	CITY OF BEND STANDARD DRAWING 710 NW WALL ST., BEND, OREGON 97701	SCALE NTS
DIV WATER				DATE 12/1/17
REV	DATE			APPR
2	12/1/17		STANDARD WATER SAMPLING STATION	STD DWG W-25

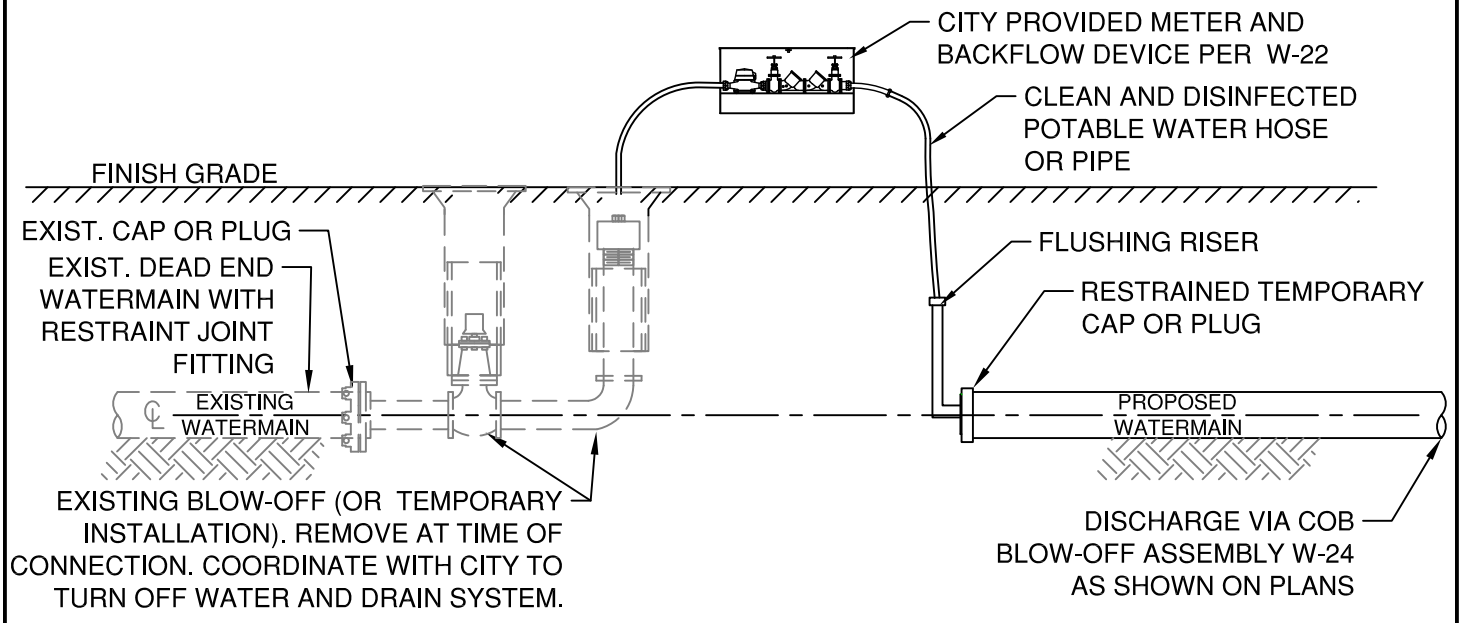

OPTION 1: TESTING AND FLUSHING USING A BLOW OFF ASSEMBLY

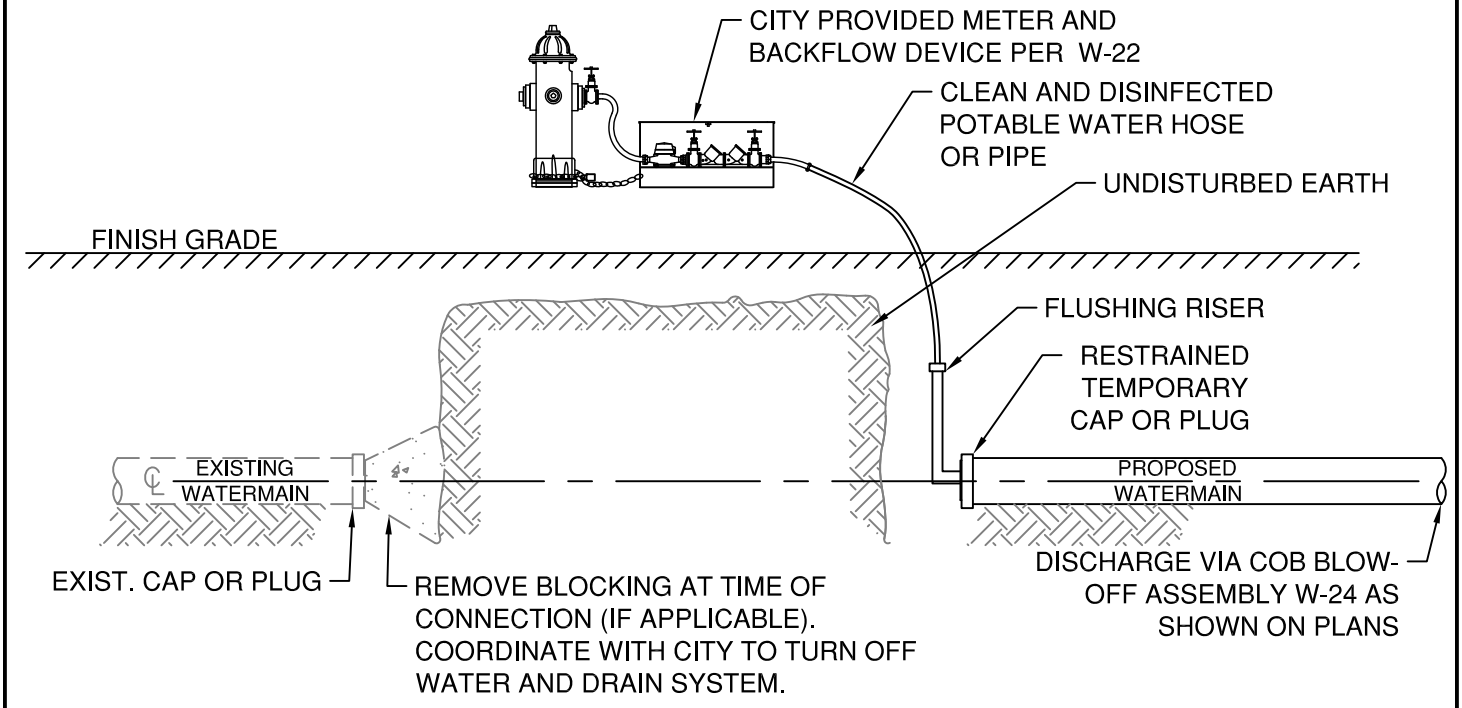

OPTION 2: TESTING AND FLUSHING USING NEARBY HYDRANT

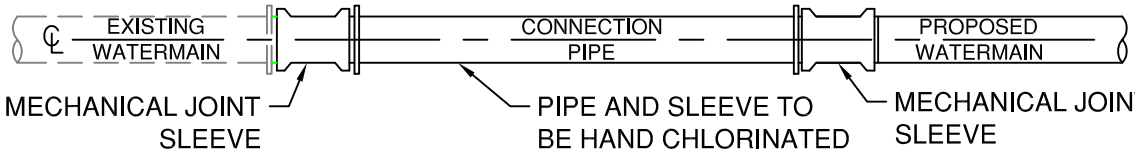

CONNECTION AFTER TESTING, FLUSHING AND APPROVAL

DRAWN CJH DIV WATER REV DATE	CITY OF BEND	CITY OF BEND STANDARD DRAWING 710 NW WALL ST., BEND, OREGON 97701 CROSS CONNECTION DETAIL	SCALE NTS DATE 12/16/17 APPR STD DWG W-29

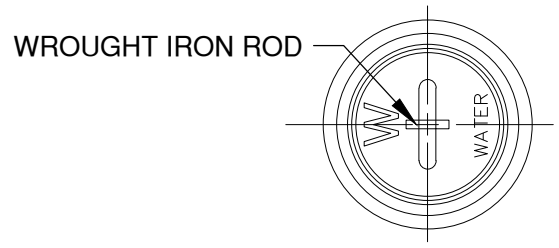

COVER PLAN

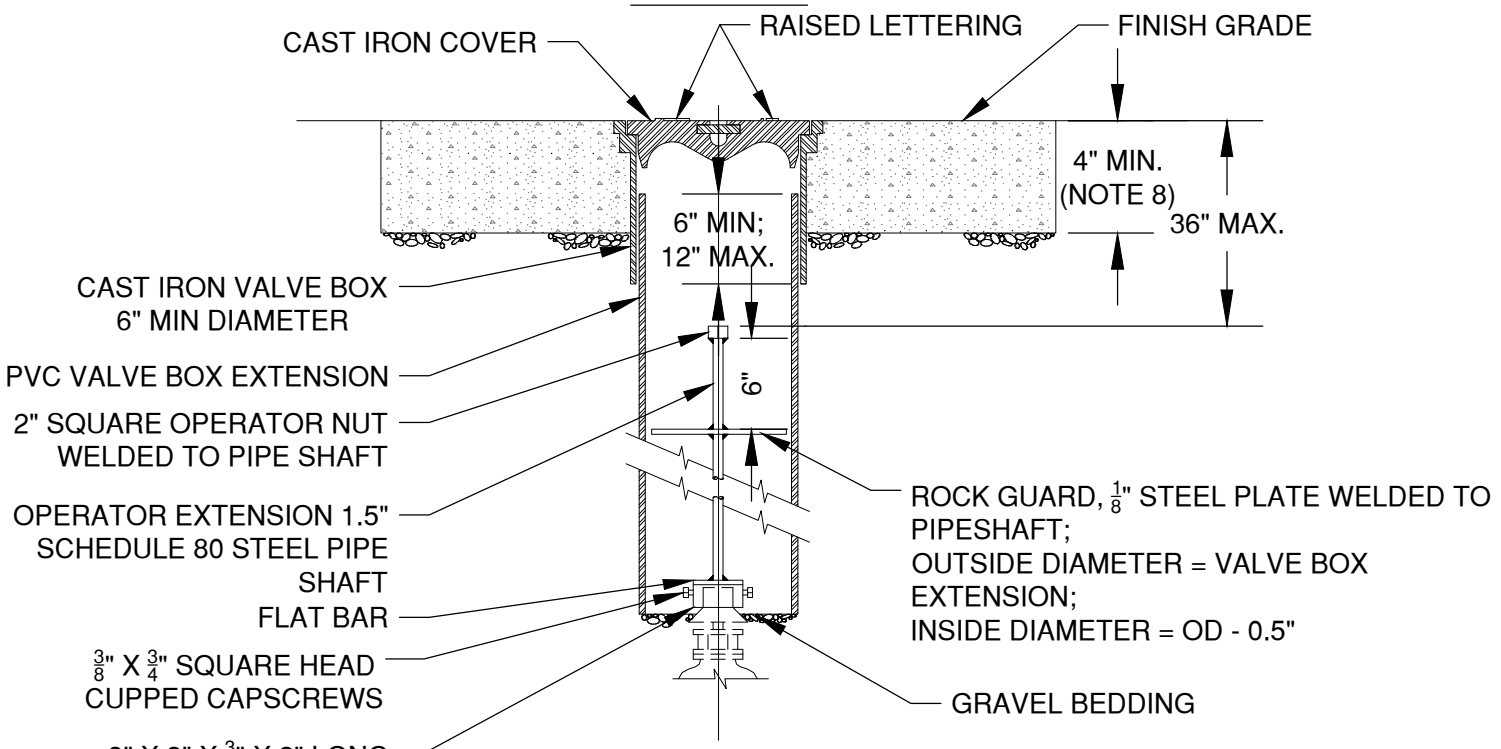

VALVE BOX EXTENSION SECTION

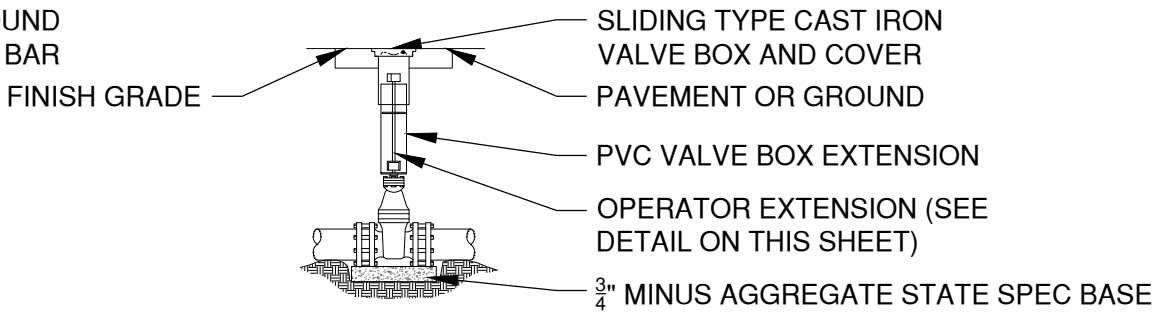

VALVE BOX ASSEMBLY DETAIL

NOTES:

1. VALVE BOX NOT TO REST ON OPERATING ASSEMBLY.
2. OPERATOR EXTENSION REQUIRED WHEN VALVE NUT IS DEEPER THAN 4' FROM FINISH GRADE.
3. CENTER VALVE BOX ON AXIS OF OPERATOR NUT.
4. VALVES 12" AND SMALLER TO BE INSTALLED WITH COMPACTED AGGR. BASE ON UNDISTURBED GROUND. VALVES GREATER THAN 12" SHALL BE INSTALLED ON 4" THICK PRECAST CONCRETE BLOCK.
5. WELDS SHALL BE MINIMUM 0.5" ALL AROUND.
6. HOT DIP GALVANIZE OPERATOR EXTENSION AFTER FABRICATION.
7. CASTING SHALL MEET H20 LOAD REQUIREMENT.
8. PROVIDE CONCRETE OR ASPHALT PAD (24" SQUARE, 4" THICK), WHEN REQUIRED.
9. SEE PROJECT PLANS FOR DETAILS NOT SHOWN.
10. ALL VALVE BOXES SHALL BE PLACED OUTSIDE THE PATH OF TRAVEL ON SIDEWALK AND DRIVEWAY APRONS.

DRAWN LJC DIV WATER REV DATE	CITY OF BEND	CITY OF BEND STANDARD DRAWING 710 NW WALL ST., BEND, OREGON 97701	SCALE NTS DATE 3/31/19 APPR
		VALVE BOX AND OPERATOR EXTENSION ASSEMBLY	STD DWG W-30

CITY OF BEND STANDARD DRAWINGS

Stormwater (STRM)

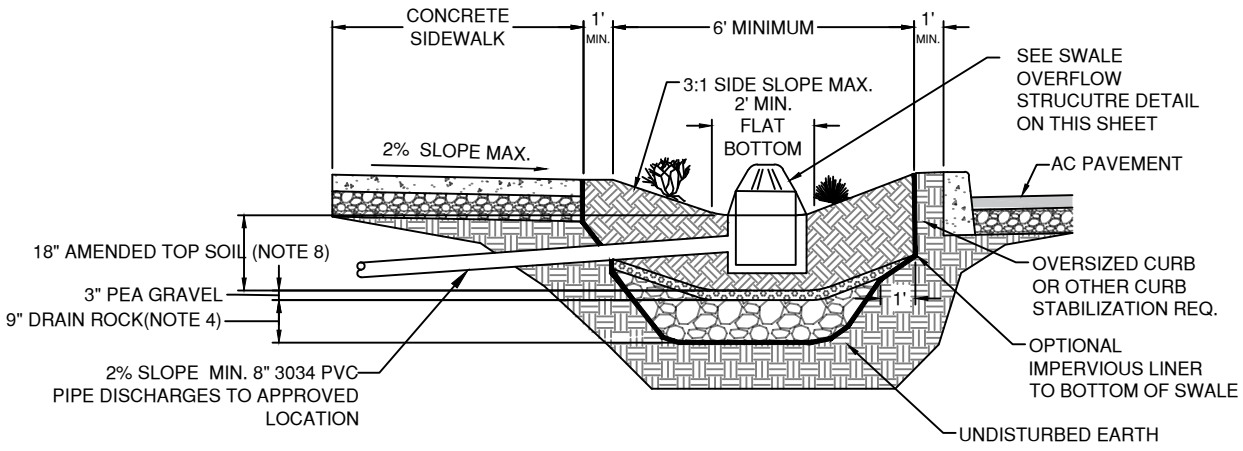

VEGETATED SWALE WITH OPTIONAL ROCK STORAGE RESERVOIR

NTS

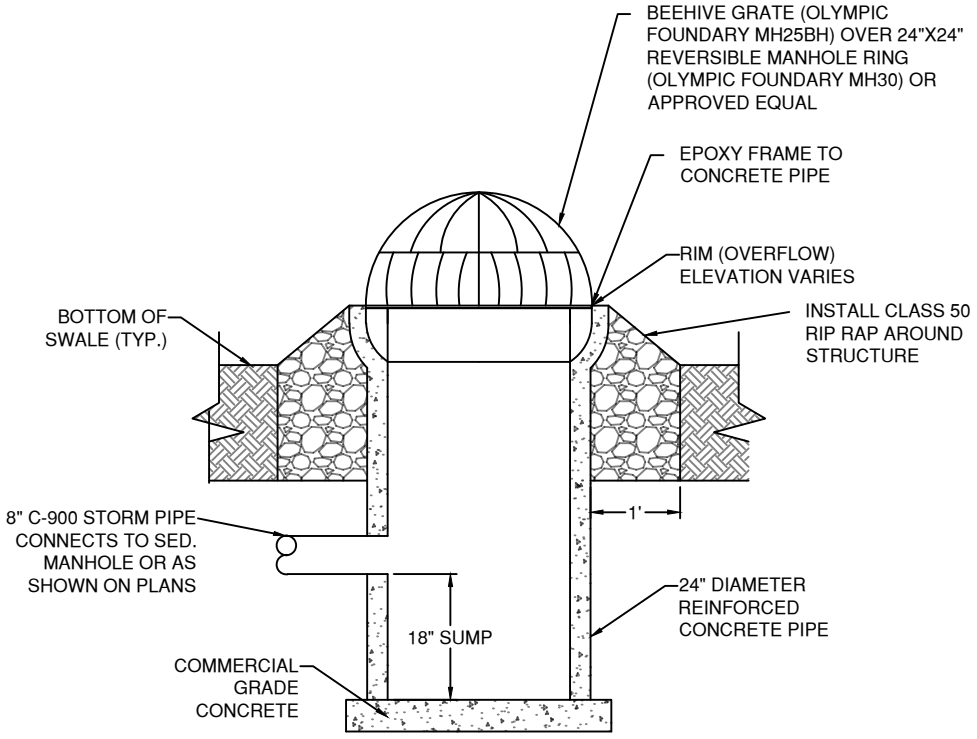

SWALE OVERFLOW STRUCTURE

NTS

NOTES:

1. AMENDED TOPSOIL SHALL CONTAIN 20-30% TOPSOIL, 50-65% CLEAN SAND AND 5-20% COMPOST OR PEAT MOSS.
2. VOLUME AND DEPTH TO BE DETERMINED BY ENGINEER.
3. DRAIN ROCK AS REQUIRED FOR DRAINAGE CAPACITY. PEA GRAVEL TO BE USED TO PREVENT SOIL MIGRATION INTO DRAINAGE LAYER.
4. OPTIONAL ROCK RESERVOIR TO BE CONSTRUCTED WITH WASHED DRAIN ROCK WITH 40% VOIDS. NOT TO BE USED IN TREE WELLS.
5. AVOID COMPACTING SWALE AREA DURING CONSTRUCTION.
6. ADD HIGH POINT FLOW BYPASS TO AN APPROVED DISPOSAL POINT AS NECESSARY. OVERFLOW SHOULD PASS THROUGH A SEDIMENTATION MANHOLE OR PRE-TREATMENT PRIOR TO DISCHARGING TO A DRYWELL OR UIC.
7. AMENDED TOP SOIL CAN BE REPLACED WITH 3" WASHED DRAIN ROCK FOR ROCK SWALES.
8. INSTALL CHECK DAMS AS REQURED AND PER DWG STRM-4.

DRAWN LJC	CITY OF BEND	CITY OF BEND	SCALE NTS
DIV STORM		STANDARD DRAWING	DATE 12/1/17
REV 2 / DATE 12/1/17		710 NW WALL ST., BEND, OREGON 97701	APPR
		VEGETATED SWALE DETAIL	STD DWG STRM-2

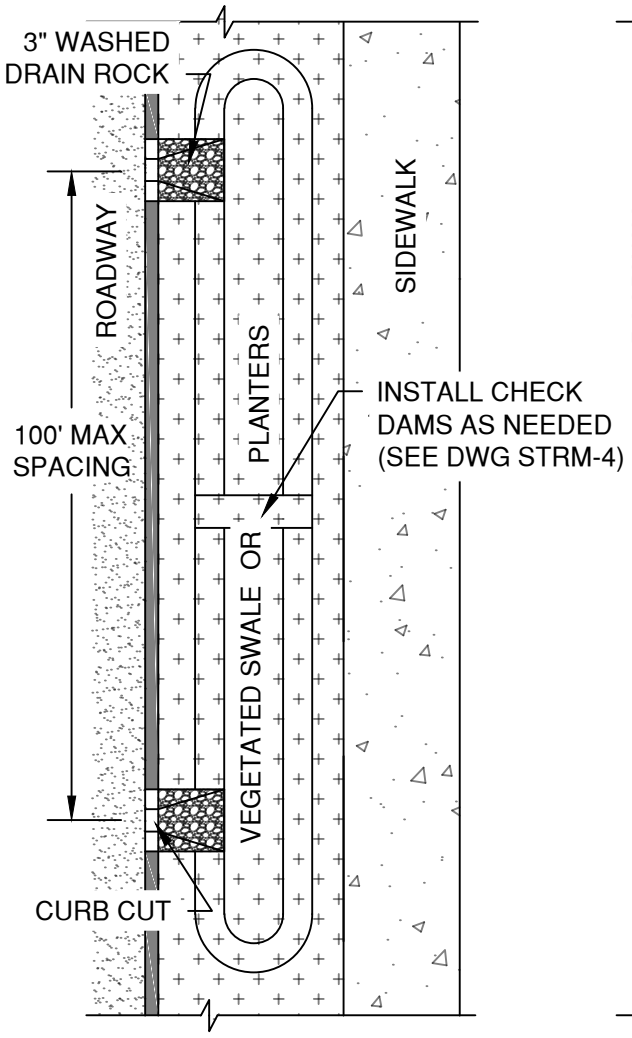

VEGETATED SWALE/ PLANTER

NTS

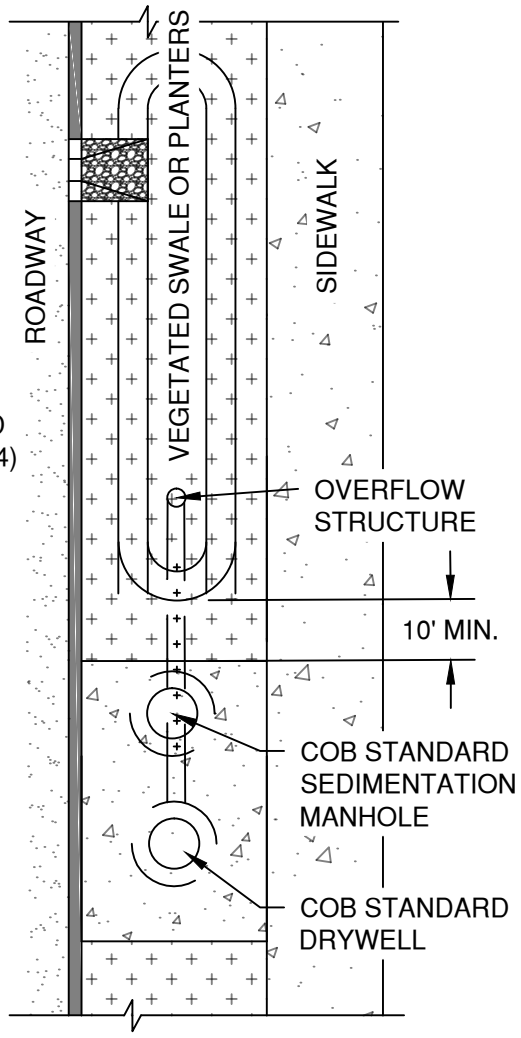

VEGETATED SWALE/ PLANTERS
W/ DRYWELL OVERFLOW

NTS

NOTE:
VOLUME AND DEPTH
TO BE DETERMINED
BY ENGINEER

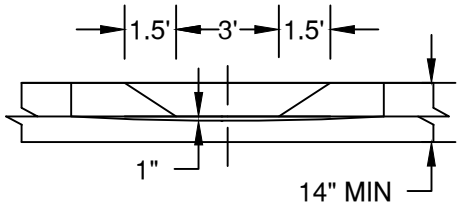

TYPICAL CURB CUT

DRAWN LJC	CITY OF BEND	CITY OF BEND	SCALE NTS
DIV STORM		STANDARD DRAWING	DATE 12/1/17
REV DATE		710 NW WALL ST., BEND, OREGON 97701	APPR
2 12/1/17		TYPICAL SWALE LAYOUT	STD DWG STRM-3

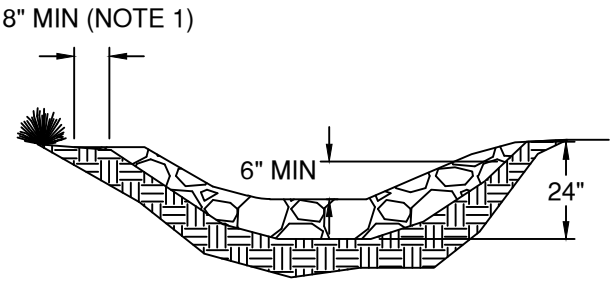

CHANNEL CROSS SECTION

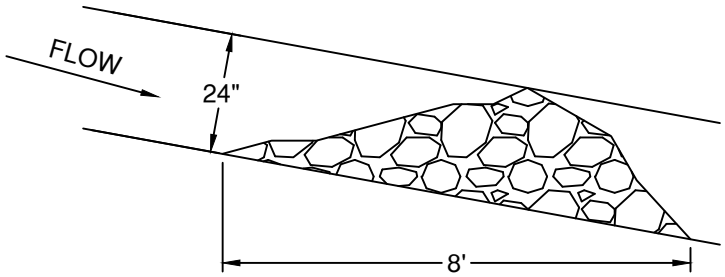

CHECK DAM PROFILE

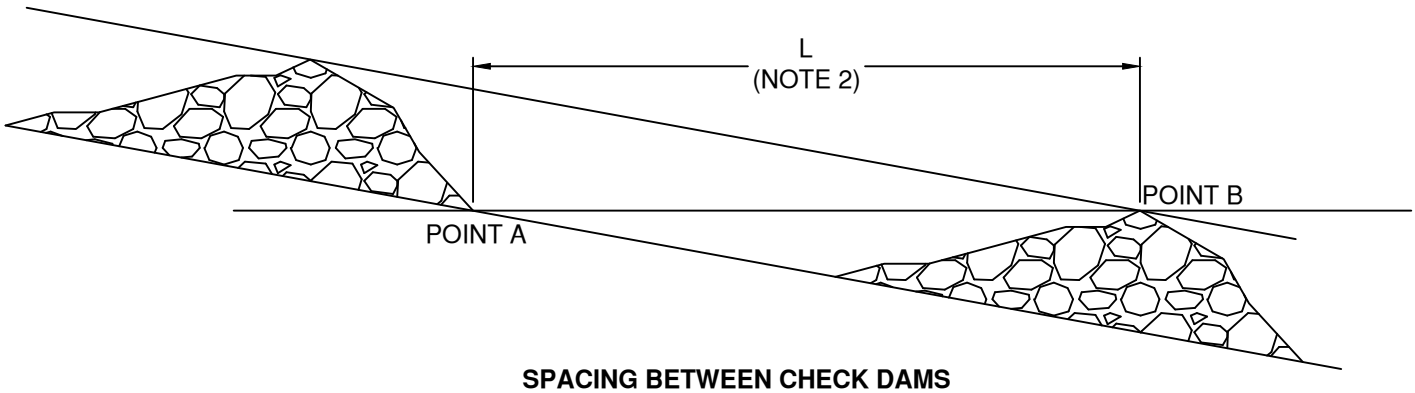

SPACING BETWEEN CHECK DAMS

NOTES:

1. KEY STONE INTO THE CHANNEL BANKS AND EXTEND DAM A MINIMUM OF 18" TO PREVENT FLOW AROUND DAM.
2. L IS EQUAL TO THE DISTANCE SUCH THAT 'POINT A' AND 'POINT B' ARE OF EQUAL ELEVATION.
3. CHECK DAMS SHALL BE INSTALLED PER CENTRAL OREGON STORMWATER MANUAL (COSM) REQUIREMENTS.

DRAWN LJC	CITY OF BEND	CITY OF BEND STANDARD DRAWING 710 NW WALL ST., BEND, OREGON 97701	SCALE NTS
DIV STORM			DATE 12/1/17
REV / DATE			APPR
	CITY OF BEND	CHECK DAM DETAIL	STD DWG STRM-4

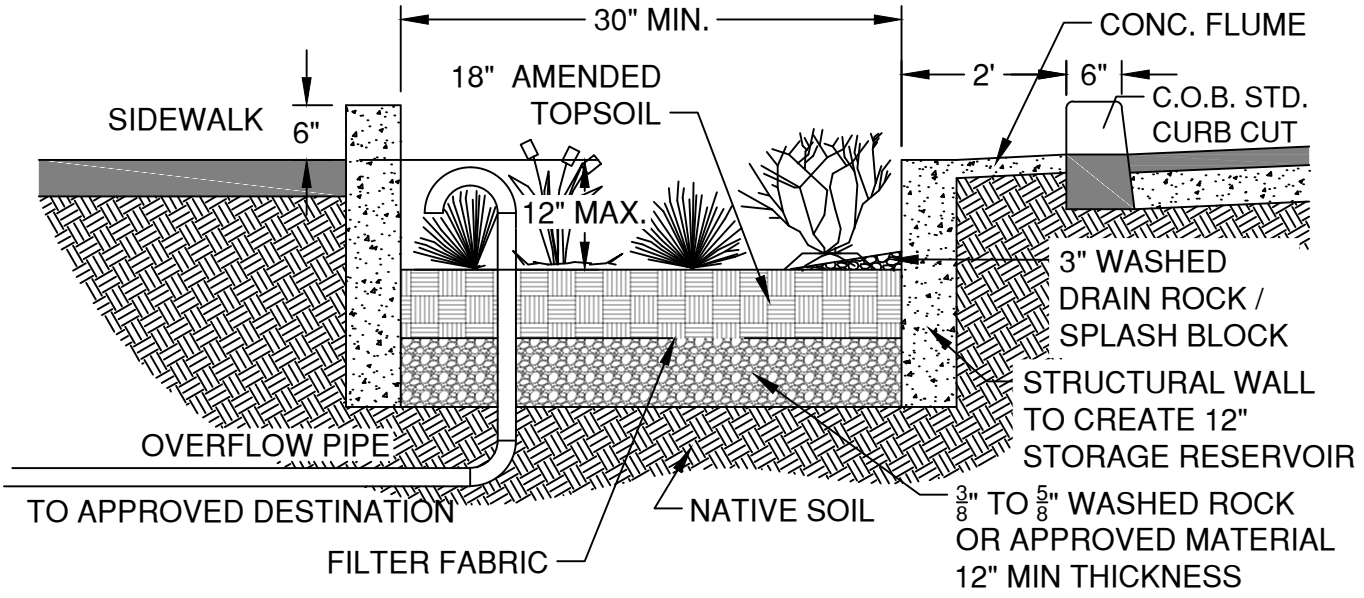

INFILTRATION PLANTER TYPICAL SECTION

NTS

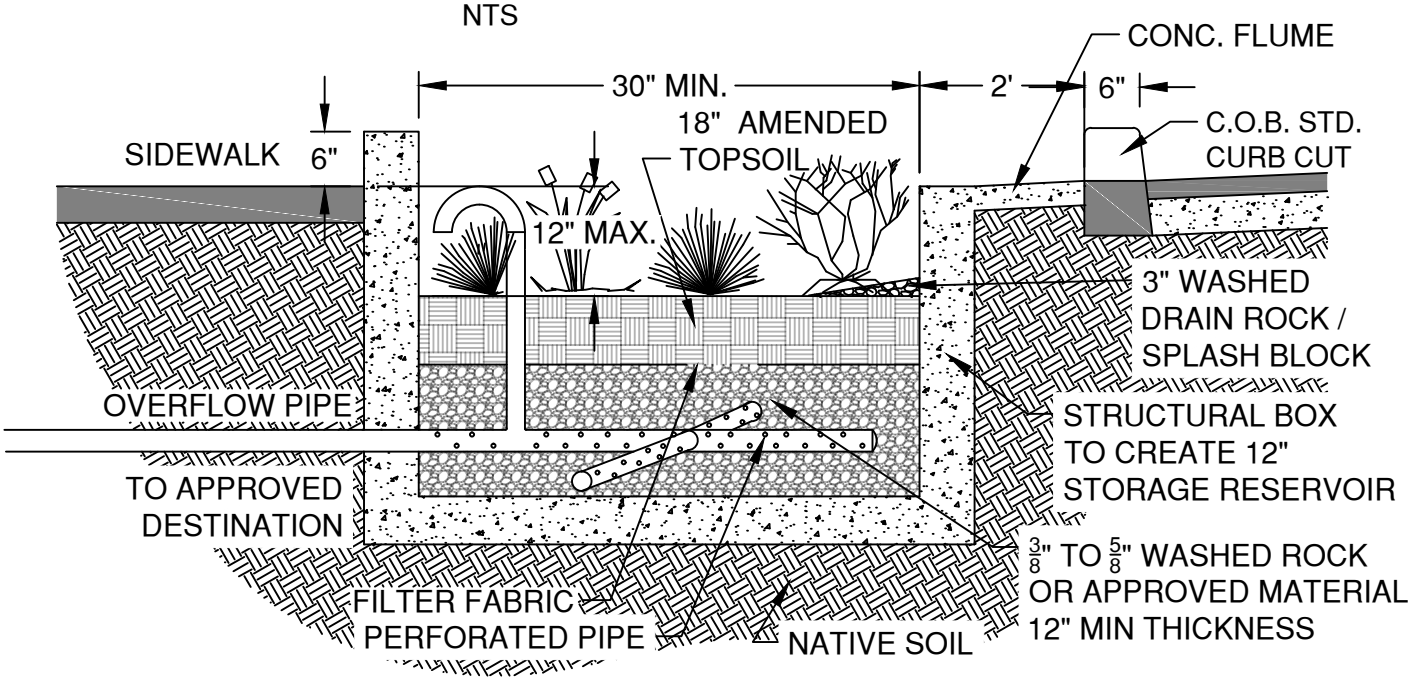

FLOW-THROUGH PLANTER TYPICAL SECTION

NTS

NOTE:

1. NOT FOR USE ALONG STREETS WITH POSTED SPEED ABOVE 25 MPH, UNLESS OUTSIDE THE CLEAR ZONE.
2. AMENDED TOPSOIL SHALL CONTAIN 20-30% TOPSOIL, 50-65% CLEAN SAND AND 5-20% COMPOST OR PEAT MOSS
3. VOLUME AND DEPTH TO BE DETERMINED BY ENGINEER.
4. USE INFILTRATION PLANTER IF EXISTING SITE HAS AN INFILTRATION RATES > 0.5 IN/HR.
5. PLACE OVERFLOW PIPE 2" BELOW TOP OF PLANTER.
6. TO AVOID UIC REGULATION DO NOT USE PERFORATED PIPE OUTSIDE OF THE

DRAWN LJC	CITY OF BEND	CITY OF BEND	SCALE NTS
DIV STORM		STANDARD DRAWING	DATE 12/1/17
REV DATE		710 NW WALL ST., BEND, OREGON 97701	APPR
		STORMWATER PLANTER DETAIL	STD DWG STRM-5

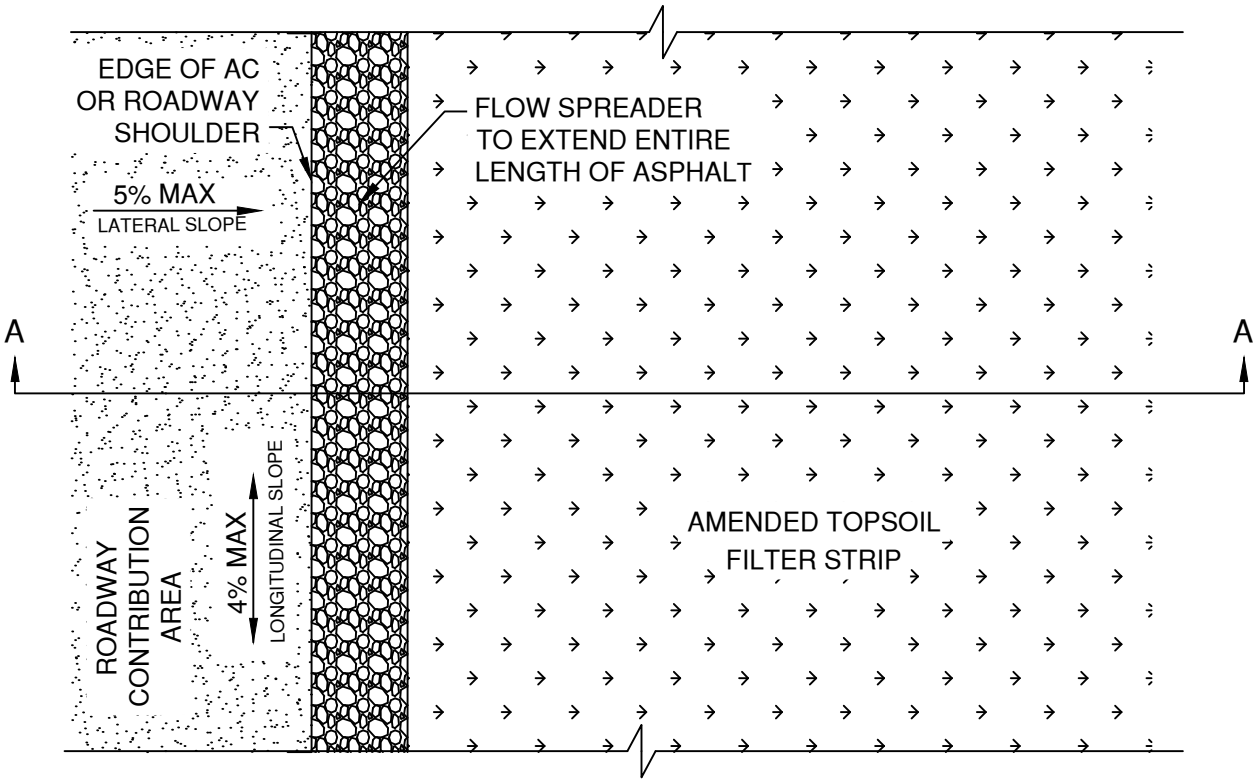

PLAN VIEW

NTS

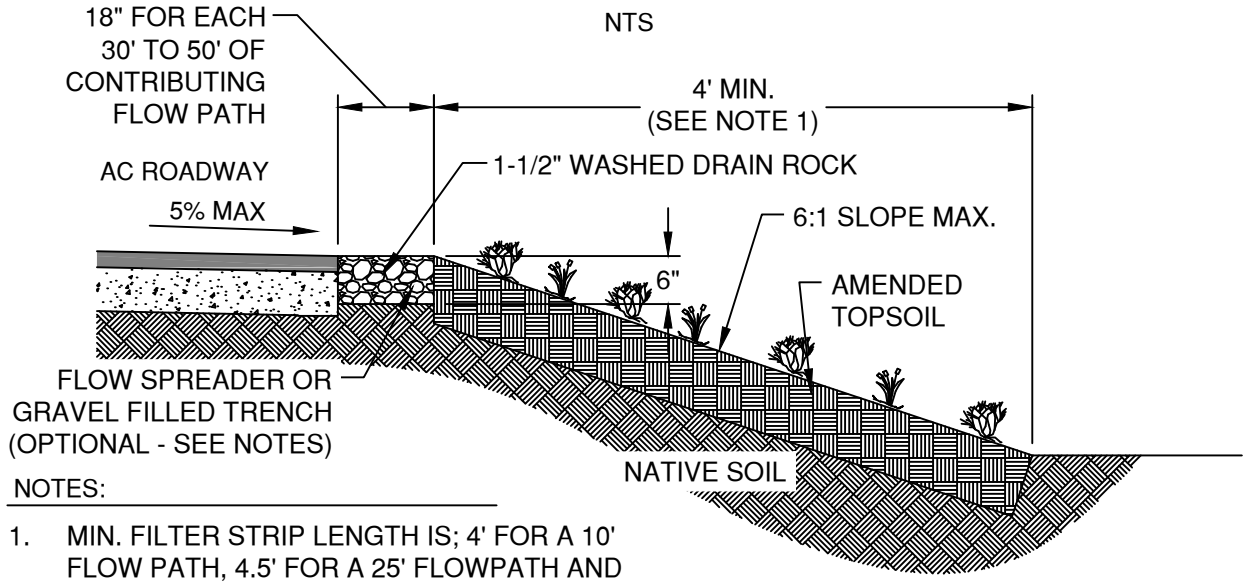

SECTION A-A

NTS

NOTES:

1. MIN. FILTER STRIP LENGTH IS; 4' FOR A 10' FLOW PATH, 4.5' FOR A 25' FLOWPATH AND 5.5' FOR A 30' FLOWPATH
2. AMENDED TOPSOIL SHALL CONTAIN 20-30% TOPSOIL, 50-65% CLEAN SAND AND 5-20% COMPOST OR PEAT MOSS
3. FLOW SPREADER IS OPTIONAL. IF USED THE GRAVEL MUST BE WIDER THAN DEEP TO AVOID UIC REGULATIONS.

DRAWN LJC	CITY OF BEND	CITY OF BEND	SCALE NTS
DIV STORM		STANDARD DRAWING	DATE 12/1/17
REV DATE		710 NW WALL ST., BEND, OREGON 97701	APPR
		STORMWATER FILTER DETAIL	STD DWG STRM-6

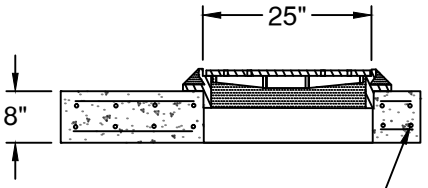

FLAT TOP
NTS

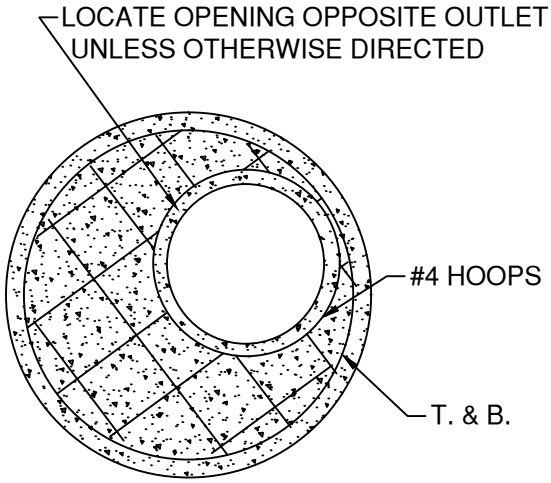

TOP VIEW

NOTES:

1. A 3 POINT MECHANICAL ADJUSTMENT SYSTEM SUCH AS RAD`S OR APPROVED EQUAL SHALL BE USED TO ADJUST MANHOLE FRAME AND COVER TO FINISH GRADE.

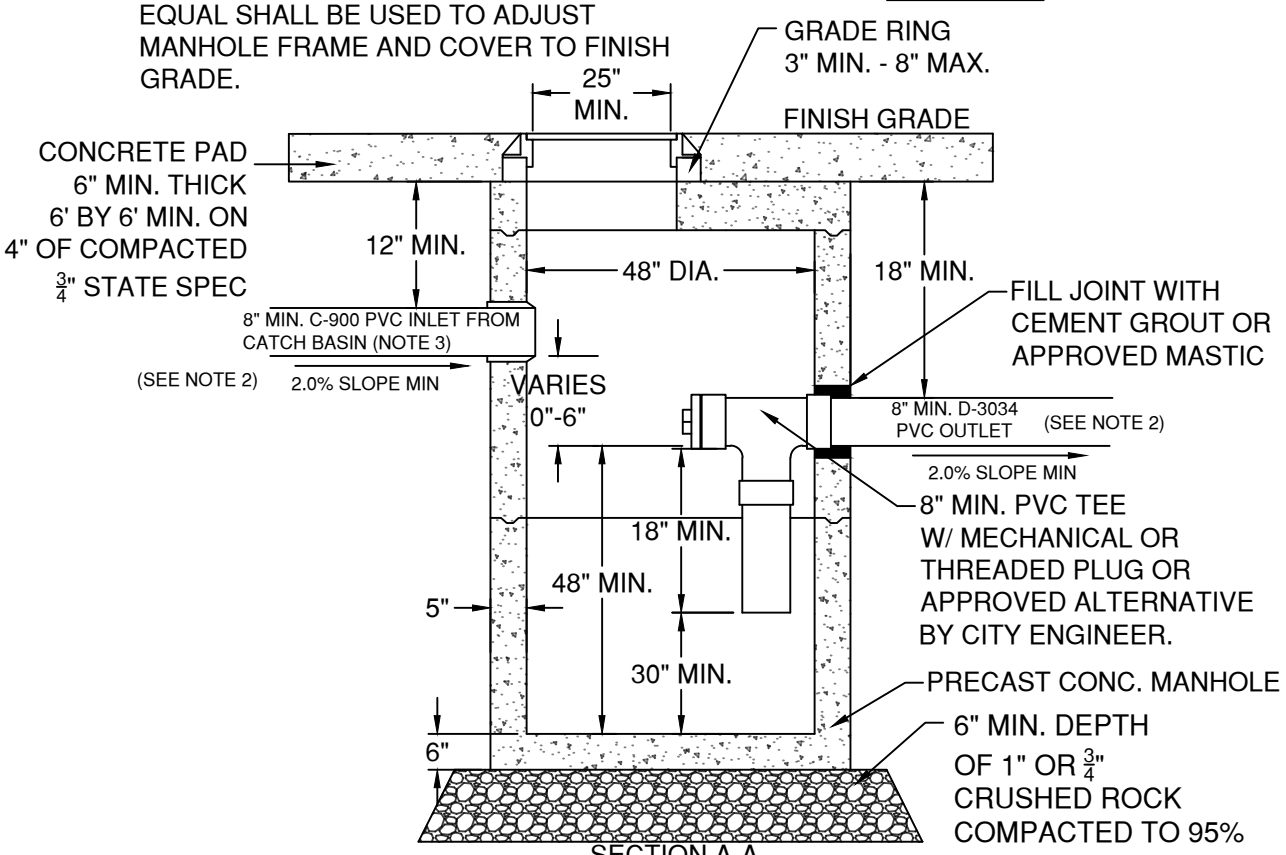

SECTION A-A
NTS

NOTES:

1. ALL PRE-CAST SECTIONS SHALL CONFORM TO REQUIREMENTS OF ASTM C-478.
2. ALL CONNECTING PIPES SHALL HAVE A FLEXIBLE JOINT WITHIN 18" OF MANHOLE WALL.
3. C-900 PIPE SHALL BE USED WITHIN TRAVEL AREAS. 3034 PIPE CAN BE USED IN LANDSCAPE STRIPS.
4. MANHOLES SHALL BE PLACED OUTSIDE SIDEWALK, APRONS & STREET SURFACES UNLESS APPROVED BY THE CITY ENGINEER.

DRAWN LJC	CITY OF BEND	CITY OF BEND	SCALE NTS
DIV STORM		STANDARD DRAWING	DATE 12/1/17
REV 2 / DATE 12/1/17		710 NW WALL ST., BEND, OREGON 97701	APPR
		STORMWATER SEDIMENTATION MANHOLE	STD DWG STRM-7

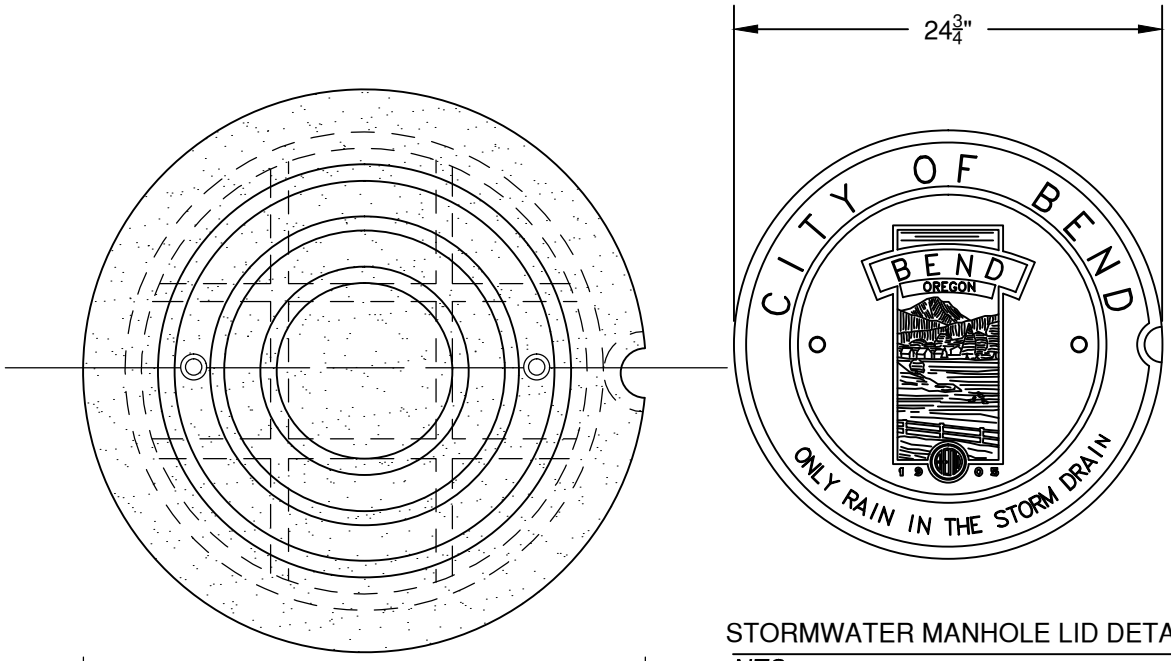

STORMWATER MANHOLE LID DETAIL

NTS

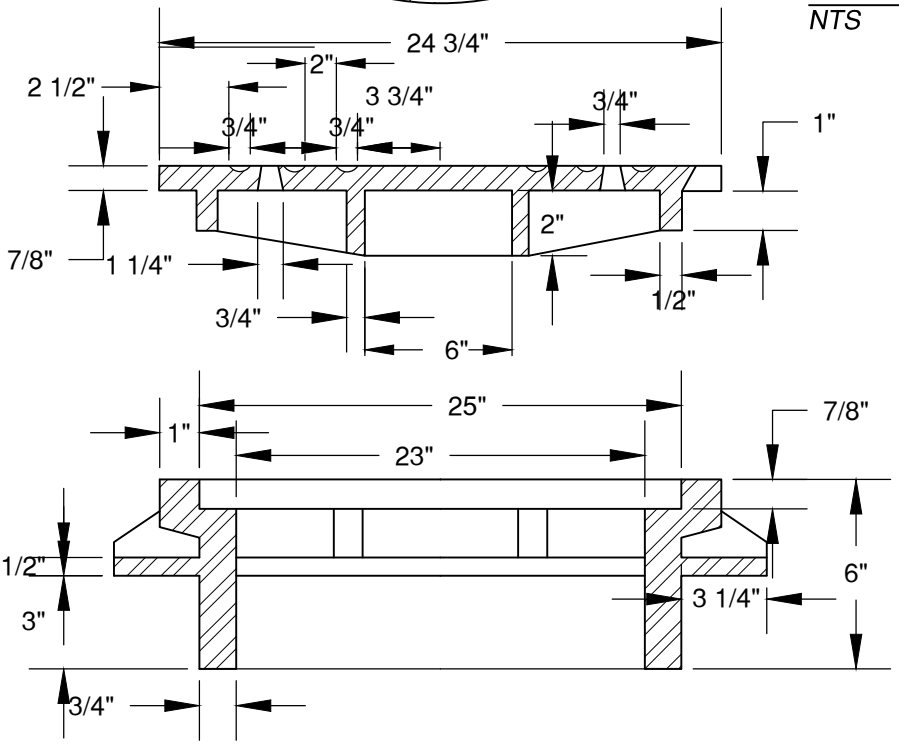

NOTE:

1. MANHOLE LID ONLY TO BE USED ON CITY OF BEND PUBLIC DRYWELLS AND SEDIMENTATION MANHOLES. PRIVATELY OWNED DRYWELLS AND SEDIMENT MANHOLES SHALL NOT USE A CITY OF BEND MANHOLE LID.
2. HINGED MANHOLE LIDS ARE NOT PERMITTED UNLESS OTHERWISE APPROVED BY THE CITY ENGINEER.
3. ALL MANHOLE LIDS SHALL BE PLACED OUTSIDE THE PATH OF TRAVEL OF SIDEWALKS AND DRIVEWAY APRONS.

DRAWN LJC	CITY OF BEND	CITY OF BEND	SCALE NTS
DIV STORM		STANDARD DRAWING	DATE 3/31/19
REV / DATE		710 NW WALL ST., BEND, OREGON 97701	APPR
		STORMWATER MANHOLE LID DETAIL	STD DWG STRM-8

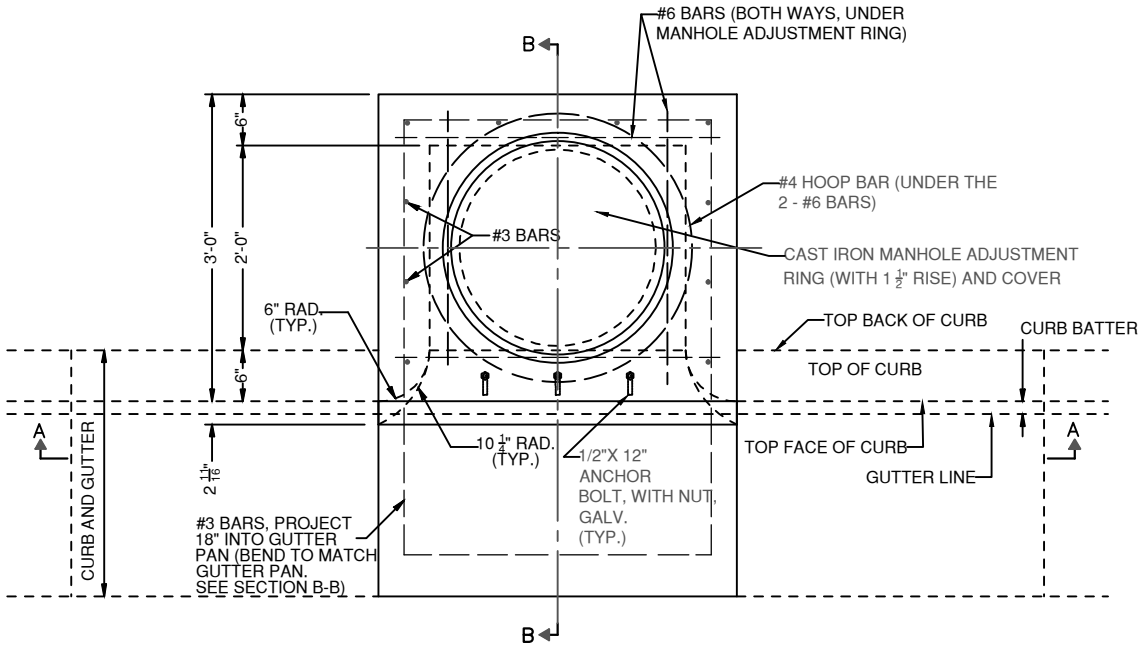

PLAN VIEW

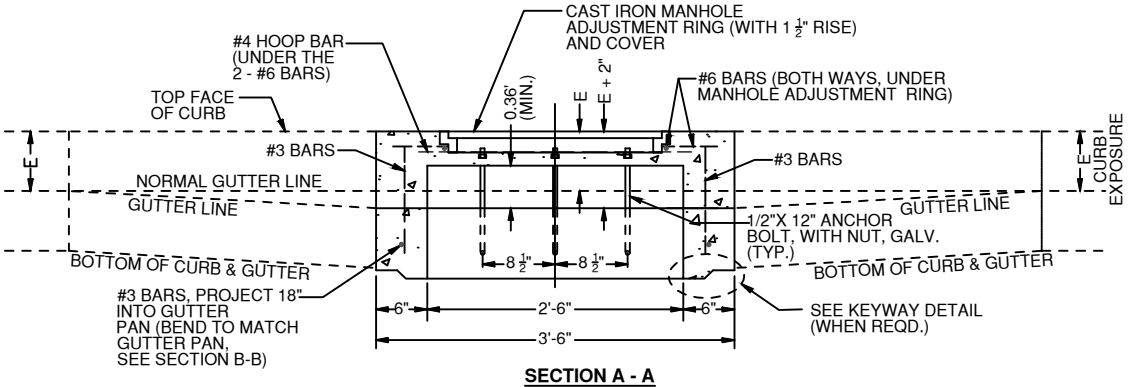

SECTION A - A

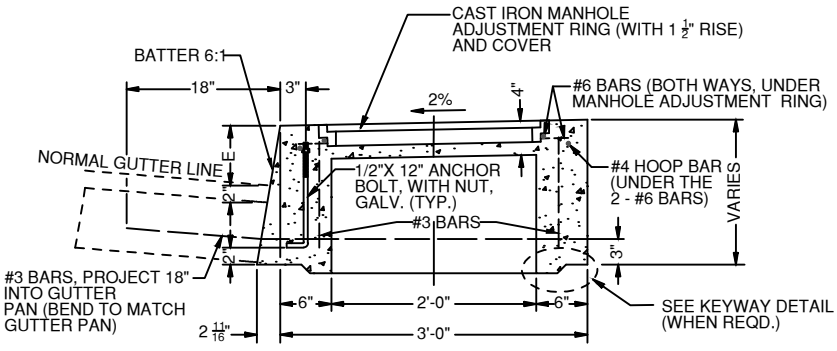

SECTION B - B

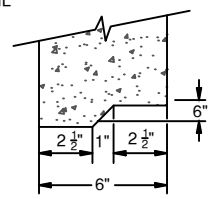

KEYWAY DETAIL

NOTES:

1. REMOVE SUFFICIENT CURB TO POUR BACK WALL. TOP SECTION MAY BE POURED MONOLITHIC WITH SIDEWALK.
2. CURB INLETS TO BE USED ON ARTERIAL AND COLLECTOR ROADWAYS.
3. "E" = CURB EXPOSURE.

DRAWN LJC	CITY OF BEND	CITY OF BEND	SCALE NTS
DIV STORM		STANDARD DRAWING	DATE 12/1/2017
REV / DATE		710 NW WALL ST., BEND, OREGON 97701	APPR
2 / 12/1/17		STANDARD CATCH BASIN SPECIAL INLETS	STD DWG STRM-9

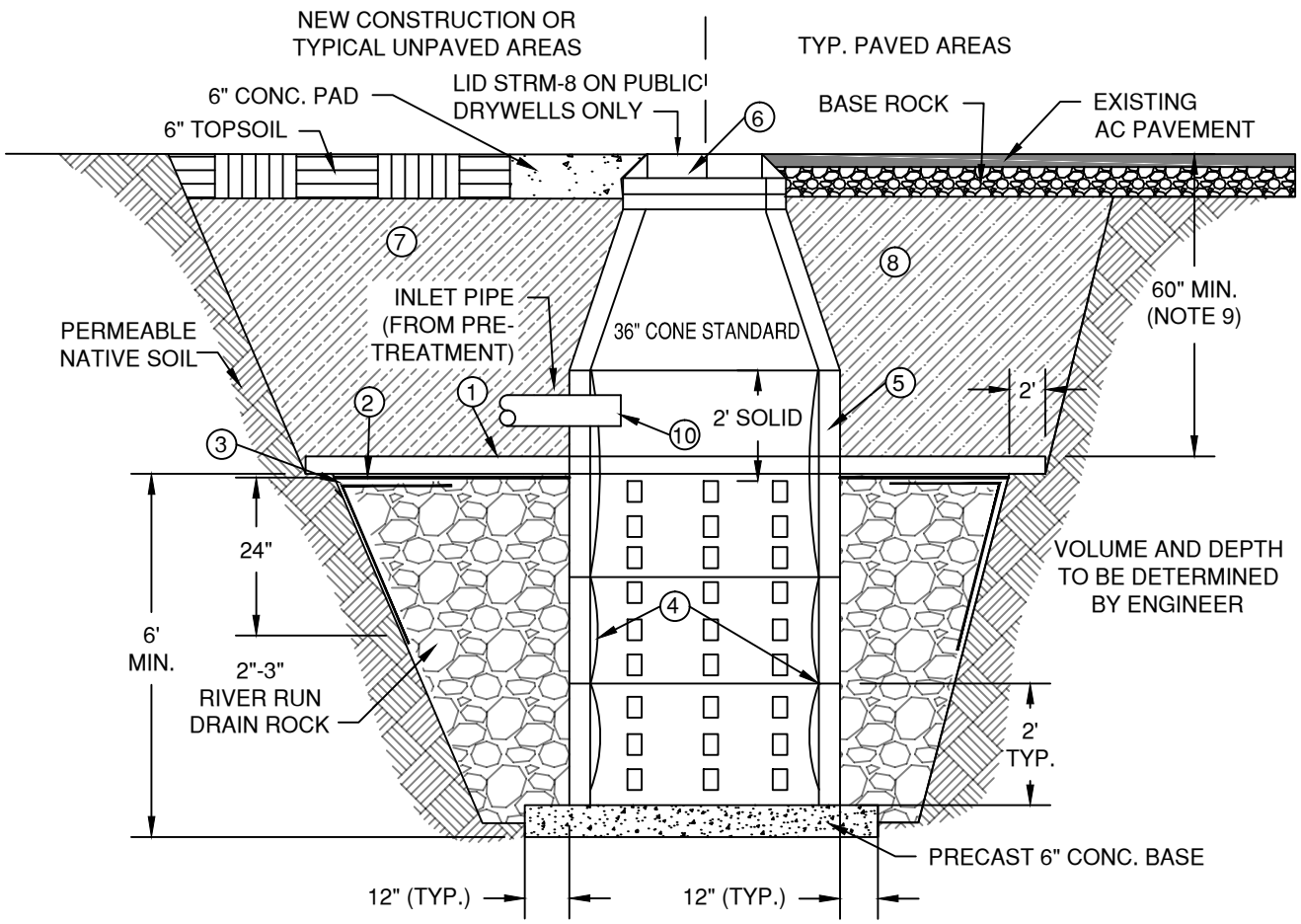

NOTES:

* SEE ALSO THE CITY OF BEND STANDARDS AND SPECIFICATIONS FOR DESIGN CRITERIA

1. 6" CONCRETE CAP, CL. 3000, EXTEND TO UNDISTURBED MATERIAL 2' MIN. REQUIRED WITHIN ALL CITY OF BEND RIGHT OF WAY UNLESS NOTED OTHERWISE.
2. MOISTURE BARRIER-2 LAYERS OF 4 MIL POLY. ON ALL ROCK INSTALLATIONS.
3. WOVEN GEOFABRIC CONFORMING TO DRAINAGE GEOTEXTILE, OREGON TABLE 02320-1 REQUIRED ON ALL EARTH OR GRAVEL EXCAVATIONS TO 24" INTO ROCK. LAP 24" WITH MOISTURE BARRIER.
4. LINE INSIDE OF PERFORATED BARREL WITH HEAVY WEIGHT VINYL SCREEN, SUCH AS FULL FLOW VINYL SCREEN. LINER SHALL BE FULLY AND CONTINUOUSLY ANCHORED, TOP AND BOTTOM OF EACH SECTION. ATTACH BY OVERLAPPING 12" MIN. BETWEEN JOINT OF MANHOLE CONE AND PERFORATED BARREL SECTION. INLET PIPE SHALL BE EXTENDED THROUGH THE SCREEN IF SCREEN IS ATTACHED ABOVE THE PIPE.
5. PRE-CAST SECTIONS SHALL CONFORM TO THE REQUIREMENTS OF ASTM C-478. CONCRETE SHALL BE CL.3300, AIR ENTRAINED CONCRETE.
6. STANDARD RING AND COVER REQUIRED IN RIGHT-OF-WAY AREAS. NO SLOTTED COVERS WILL BE ALLOWED IN LIEU OF A CATCH BASIN.
7. CLASS "A" BACKFILL COMPACTED TO 95.0% OPTIMUM DRY DENSITY (AASHTO T-99).
8. CLASS "B" BACKFILL COMPACTED TO 95.0% OPTIMUM DRY DENSITY (AASHTO T-99).
9. PERFORATIONS TO BE 60" BELOW EXISTING UNDISTURBED GROUND.
10. INLET PIPE MUST BE DESIGNED SO IT CAN BE PLUGGED IN CASE OF SPILL. ALL PIPE PENETRATIONS ARE TO BE GROUTED OR WATER-TIGHT SEALED. PIPE INLETS NOT TO ENTER DRYWELL WITH PERFORATED BARREL.
11. DRYWELL RIMS TO BE PLACED OUTSIDE OF SIDEWALK, APRON & STREET SURFACES UNLESS APPROVED BY THE CITY ENGINEER.
12. PLANS SHALL PROVIDE VOLUME AND AREA OF ROCK PLACEMENT. ROCK PLACEMENT SHALL BE OUTSIDE WATER/SEWER TRENCHES. WHERE ROCK ENTERS PRIVATE PROPERTY, A DRAINAGE EASEMENT SHALL BE RECORDED.

DRAWN LJC	CITY OF BEND	CITY OF BEND	SCALE NTS
DIV STORM		STANDARD DRAWING	DATE 12/1/17
REV 2 / DATE 12/1/17		710 NW WALL ST., BEND, OREGON 97701	APPR
		STANDARD PRE-CAST DRYWELL	STD DWG STRM-10

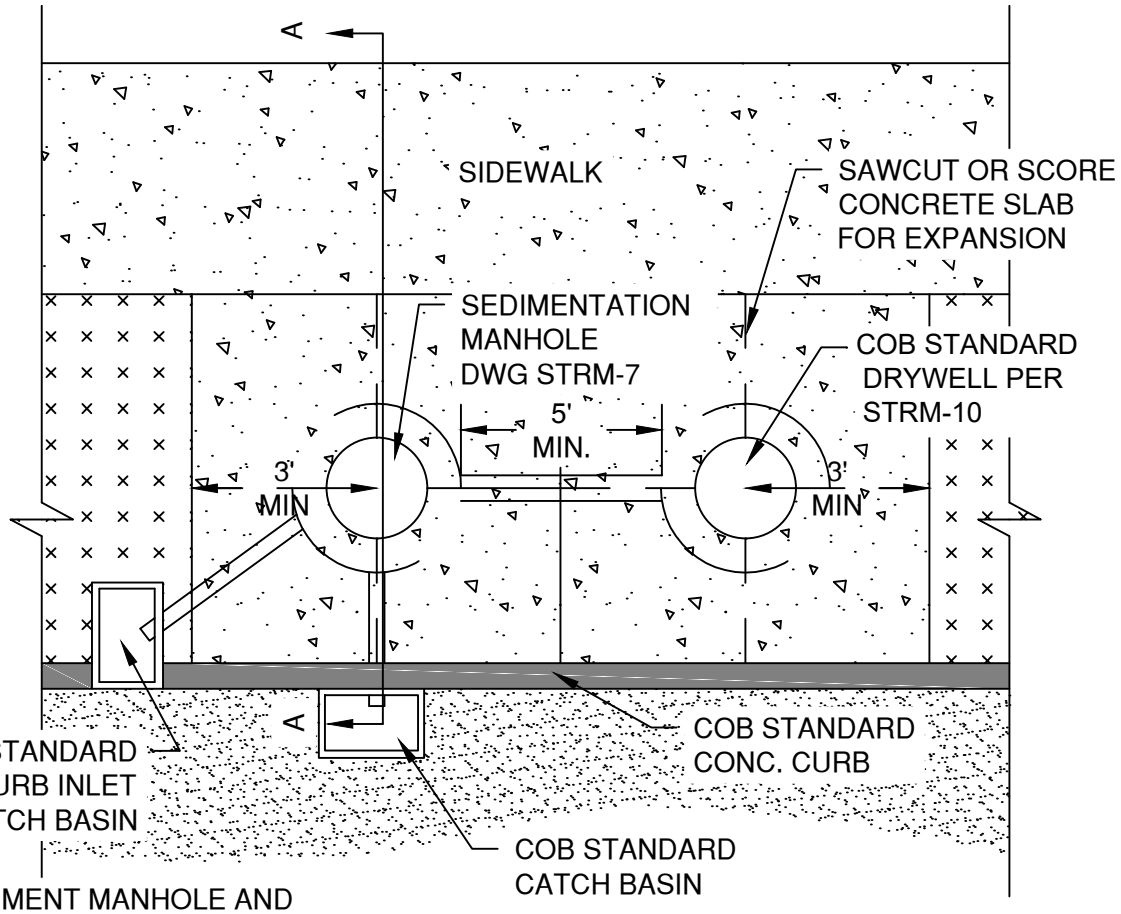

SEDIMENT MANHOLE AND DRYWELL REQUIRE A CONCRETE PAD 6" THICK AND A MINIMUM SIZE OF 6 FEET BY 6 FEET, JOINED TO THE CURB AND SIDEWALK.

PLAN VIEW
NTS

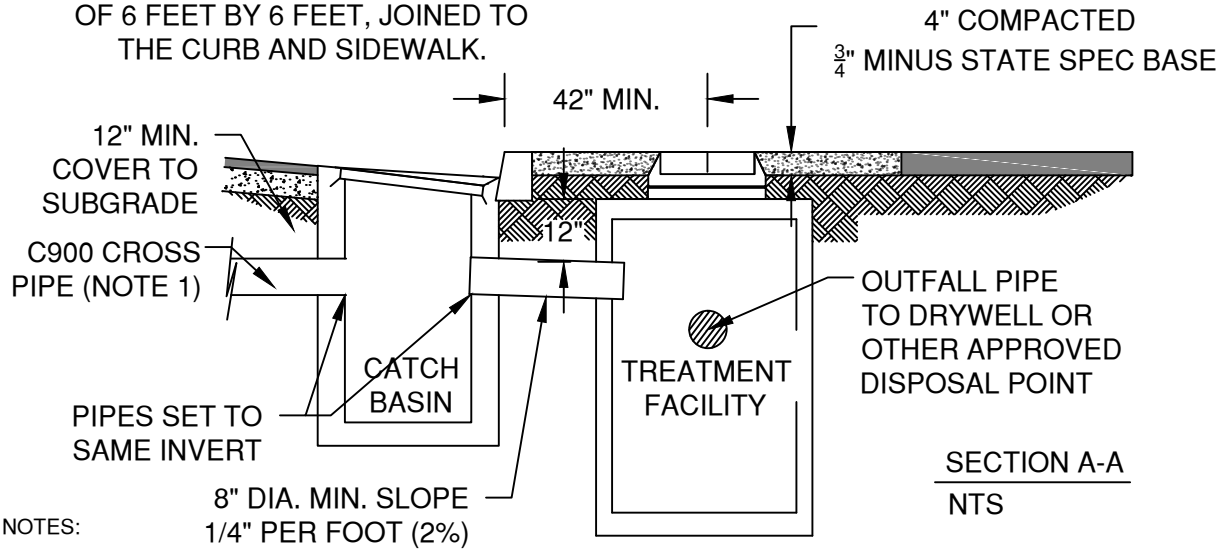

SECTION A-A
NTS

NOTES:

1. CROSS PIPE ELEV MAY REQUIRE OTHER UTILITIES (SEWER, WATER, ETC) TO BE LOWERED TO PROVIDE MINIMUM SEPARATIONS
2. ALL PIPE PENETRATIONS ARE TO BE GROUTED OR WATER TIGHT SEALED.
3. DRYWELL AND TREATMENT FACILITY NOT TO BE PLACED IN DRIVEWAY OR SIDEWALK UNLESS APPROVED BY THE CITY ENGINEER.

DRAWN LJC	CITY OF BEND	CITY OF BEND	SCALE NTS
DIV STORM		STANDARD DRAWING	DATE 12/1/2017
REV 2 / DATE 12/1/17		710 NW WALL ST., BEND, OREGON 97701	APPR
		DRYWELL W/ MANUFACTURED TREATMENT LAYOUT	STD DWG STRM-11

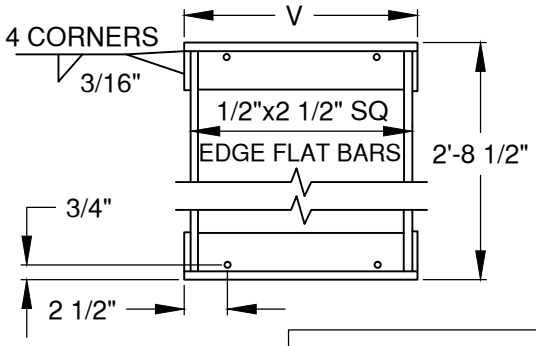

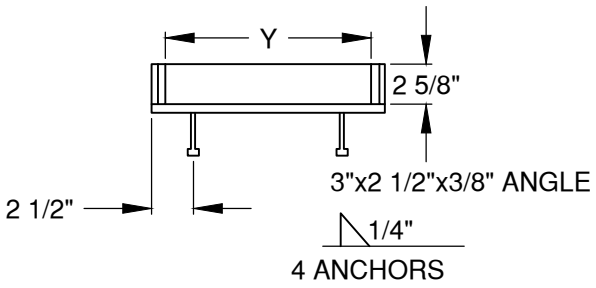

INLET TYPE	FRAME		GRATE (STRM- 13)		
	V	Y	Y1	NO OF BARS	TYPE
G-2, CG-2	2' - 4 3/4"	2' - 3 3/8"	1' - 1 1/2"	8	2"

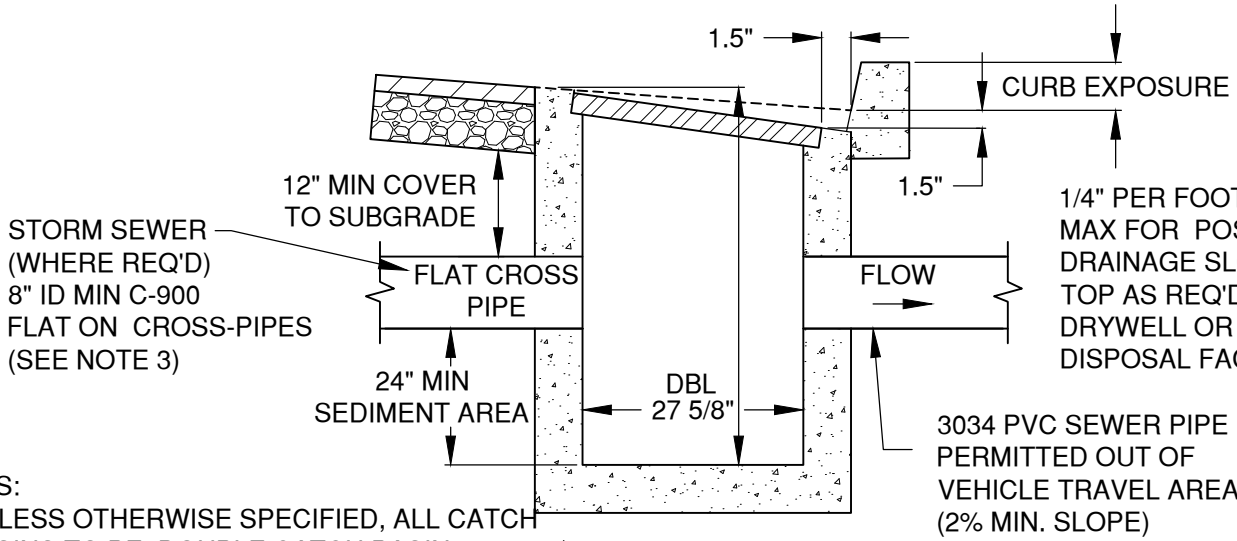

NOTES:

1. UNLESS OTHERWISE SPECIFIED, ALL CATCH BASINS TO BE DOUBLE CATCH BASIN
2. BACKFILL TO BE COMPACTED TO 95% OF OPTIMUM PER SPECIFICATION SECTION 00330.43
3. CROSS PIPE ELEV MAY REQUIRE OTHER UTILITIES (SEWER, WATER, ETC) TO BE LOWERED TO PROVIDE MINIMUM SEPARATIONS
4. ALL PIPE CONNECTIONS TO BE GROUTED PER SPECIFICATION SECTION 0470.40
5. CONTRACTOR IS RESPONSIBLE TO KEEP CATCH BASIN CLEAN AND FREE OF SEDIMENT DURING CONSTRUCTION
6. CONTRACTOR IS RESPONSIBLE TO COVER AND BARRICADE ALL CATCH BASINS UNTIL GRATE IS INSTALLED
7. STANDARD CATCH BASINS ARE LIMITED TO LOCAL STREETS AND SHALL NOT BE USED ON ARTERIAL & COLLECTOR ROADWAYS. CURB INLETS ARE TO BE USED ON ARTERIAL & COLLECTOR ROADWAYS.
8. SEE DRG R-14A FOR PAVEMENT RESURFACING

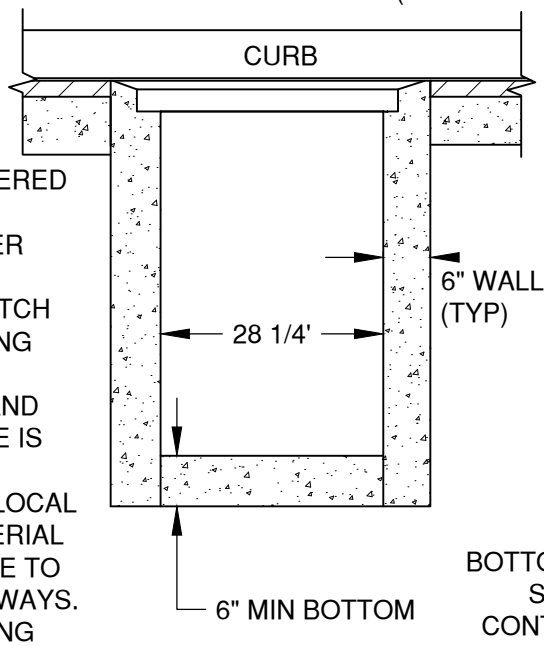

DETAIL SHOWING GRATE ORIENTATION TO CURB LINE. SEE STD DRG STRM-13 FOR GRATE DETAIL

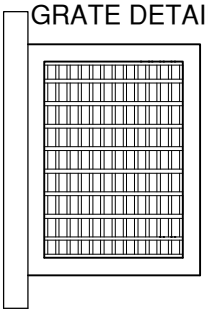

BOTTOM MAY BE POURED SEPARATELY AT CONTRACTOR'S OPTION

DRAWN LJC	CITY OF BEND	CITY OF BEND	SCALE NTS
DIV STORM		STANDARD DRAWING	DATE 3/31/19
REV / DATE: 4/9/18		710 NW WALL ST., BEND, OREGON 97701	APPR
		STANDARD CATCH BASIN	STD DWG STRM-12

GRATE

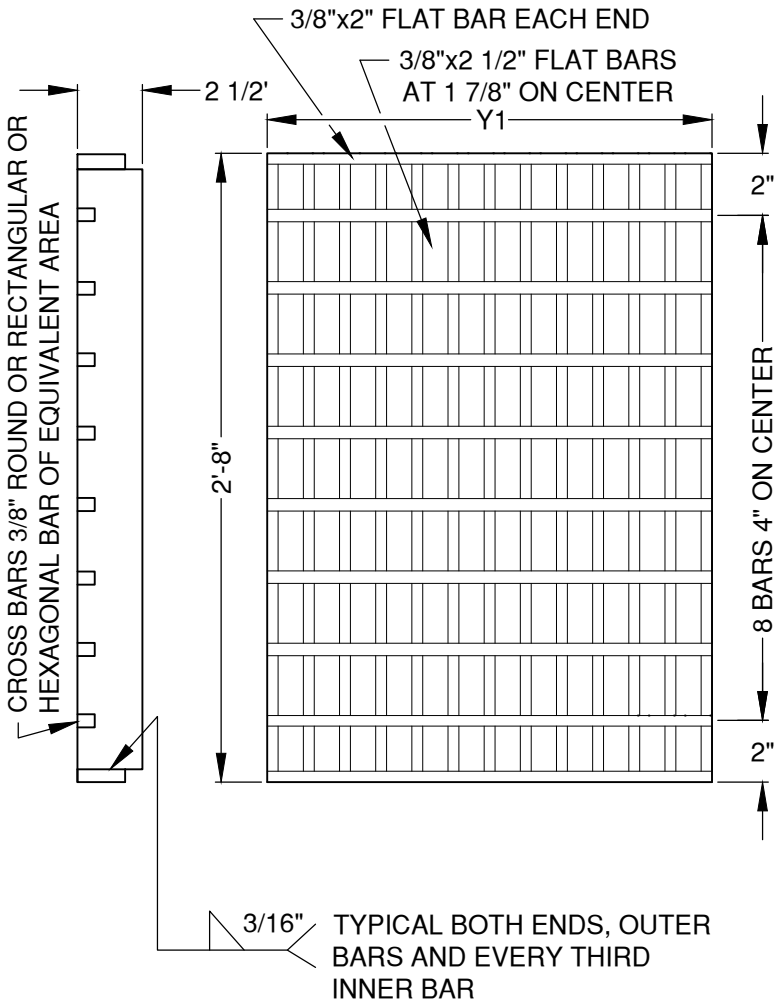

	FRAME		GRATE			
INLET TYPE	V (STRM-12)	Y (STRM-12)	Y1	NO. OF BARS	TYPE	REMARKS
G-2, CG-2	2'-4 3/4"	2'-3 3/8"	1'-1 1/2"	8	2"	2-GRATES

NOTES:

1. 3/8" CROSS BARS SHALL BE FLUSH WITH THE GRATE SURFACE AND MAY BE FILLET WELDED, RESISTANCE WELDED OR ELECTROFORGED TO BEARING BARS.
2. MUST MEET PROWAG STANDARD R302 WHEN IN THE PEDESTRIAN PATH OF TRAVEL.
3. SEE STANDARD DRG STRM-12 FOR STANDARD CATCH BASIN INSTALLATION

DRAWN LJC DIV STORM REV DATE	CITY OF BEND	CITY OF BEND STANDARD DRAWING 710 NW WALL ST., BEND, OREGON 97701 STANDARD CATCH BASIN GRATE	SCALE NTS DATE 3/31/19 APPR STD DWG STRM-13

NOTE: TAPER LENGTHS SHALL BE UTILIZED FOR ASPHALT PAVEMENT OVERLAY PROJECTS. ADJUST GRIND AS REQUIRED.

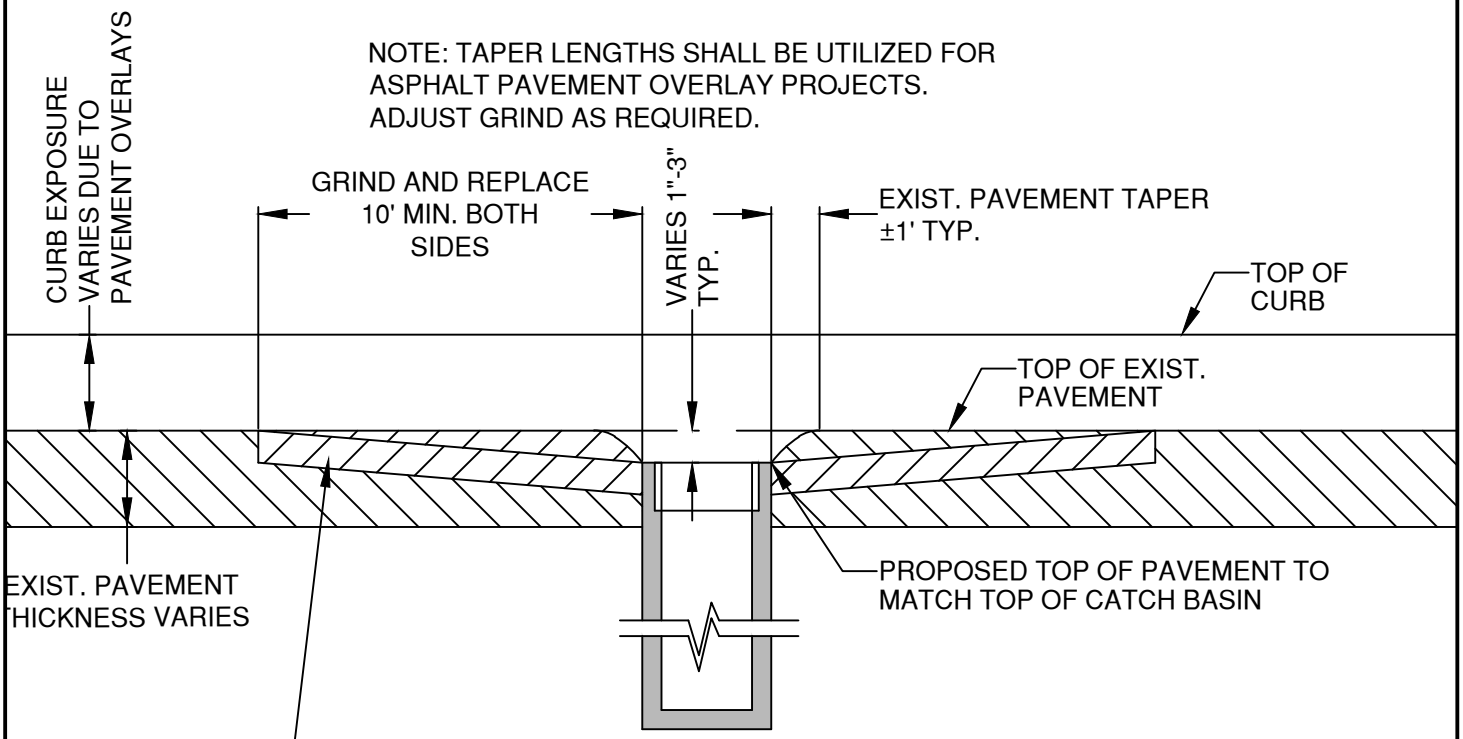

SECTION VIEW

SCALE:
HORIZONTAL: 1"=5'
VERTICAL: 1"=1'

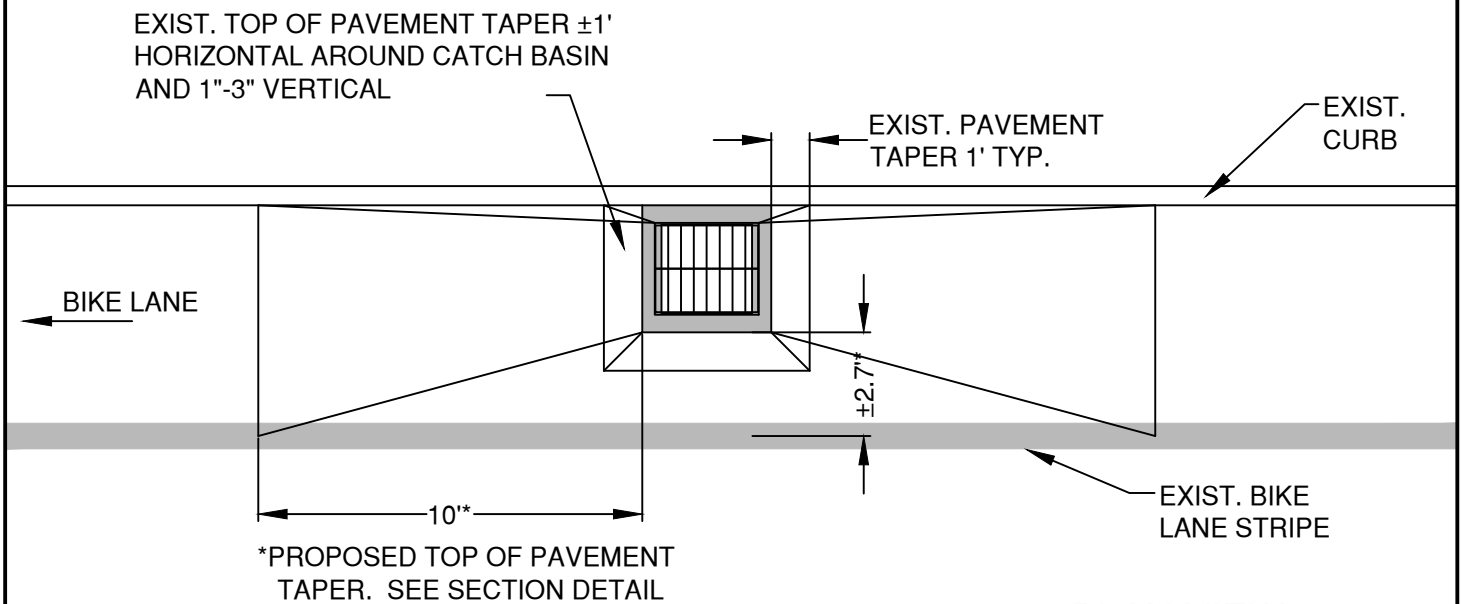

PLAN VIEW

SCALE:
HORIZONTAL: 1"=5'

DRAWN LJC DIV STORM REV DATE	CITY OF BEND	CITY OF BEND STANDARD DRAWING 710 NW WALL ST., BEND, OREGON 97701 EXISTING CATCH BASIN PAVEMENT RESURFACING	SCALE NTS DATE 3/31/19 APPR STD DWG STRM-14

CITY OF BEND STANDARD DRAWINGS

Erosion (E)

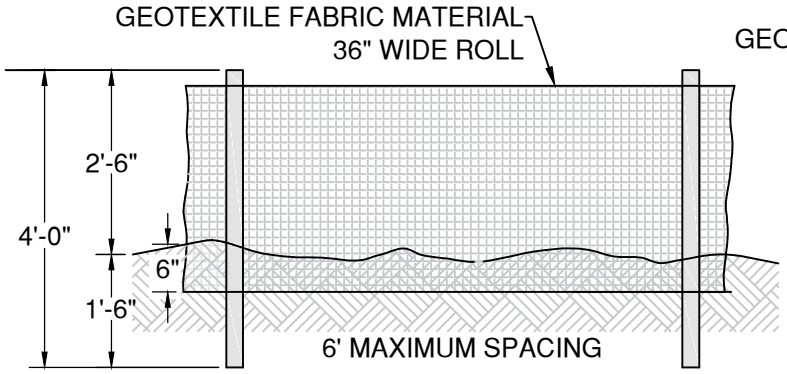

FRONT VIEW

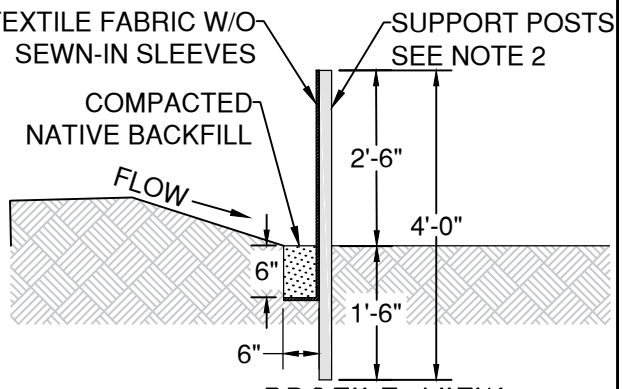

PROFILE VIEW

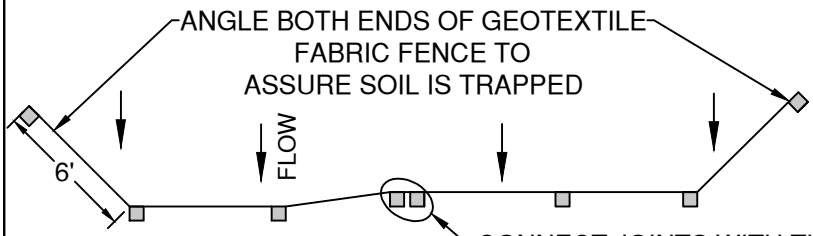

PLAN VIEW

CONNECT JOINTS WITH TURNED END OR POST SPACING OVERLAP CONNECTION (SEE DETAILS AND NOTE 1)

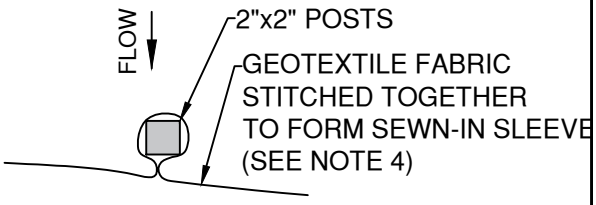

SEWN–IN SLEEVE

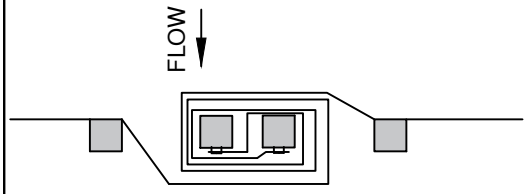

TURNED END CONNECTION

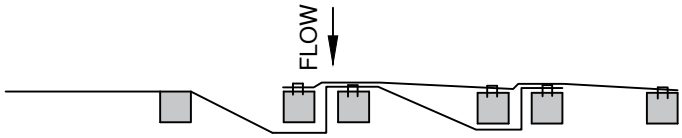

POST SPACING OVERLAP CONNECTION

NOTES:

1. THE GEOTEXTILE FABRIC SHALL BE PURCHASED IN A CONTINUOUS ROLL CUT TO THE LENGTH OF THE BARRIER TO AVOID USE OF JOINTS. WHEN JOINTS ARE NECESSARY, GEOTEXTILE SHALL BE SPLICED TOGETHER AT A SUPPORT POST UTILIZING A TURNED END OR POST SPACING OVERLAP CONNECTION.
2. THE FENCE POSTS SHALL BE SPACED A MAXIMUM OF 6 FEET APART AND INSTALLED INTO THE GROUND 18 INCHES MIN. FENCE POSTS SHALL BE 2" X 2" FIRE, PINE, OR STEEL AND INSTALLED ON THE DOWNHILL SIDE OF THE GEOTEXTILE FABRIC. THE GEOTEXTILE FABRIC FENCE SHALL BE INSTALLED TO FOLLOW THE SLOPE CONTOURS, TO MAXIMIZE PONDING EFFICIENCY WHERE FEASIBLE.
3. BURY BOTTOM OF THE GEOTEXTILE FABRIC 6 INCHES BELOW GRADE. BACKFILL AND COMPACT.
4. WHEN SEWN-IN SLEEVES ARE USED, THE POSTS SHALL BE INSTALLED WITHIN THE SLEEVE ON THE UPHILL SIDE GEOTEXTILE FABRIC.
5. GEOTEXTILE FABRIC FENCE SHALL BE REMOVED WHEN IT HAS SERVED ITS USEFUL PURPOSE, BUT NOT BEFORE THE UPSLOPE AREA HAS BEEN PERMANENTLY PROTECTED AND STABILIZED.
6. GEOTEXTILE FABRIC FENCES SHALL BE INSPECTED BY APPLICANT/CONTRACTOR AFTER EACH RAIN OR SNOW EVENT AND AT LEAST DAILY DURING PROLONGED RAINFALL. ANY REQUIRED REPAIRS SHALL BE MADE IMMEDIATELY.
7. MAXIMUM RECOMMENDED FENCE WIDTH IS 500 FEET. MAXIMUM TRIBUTARY AREA IS 0.25 ACRE PER 100' OF FENCE. MAXIMUM RECOMMENDED SLOPE LENGTH IS 100'.

DRAWN LJC DIV STORM REV DATE 4/9/18	CITY OF BEND	CITY OF BEND STANDARD DRAWING 710 NW WALL ST., BEND, OREGON 97701 SEDIMENT FENCE DETAIL	SCALE NTS DATE 3/31/19 APPR STD DWG E-1

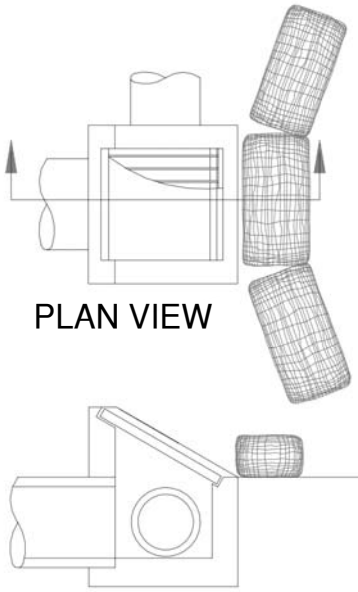

DITCH INLET

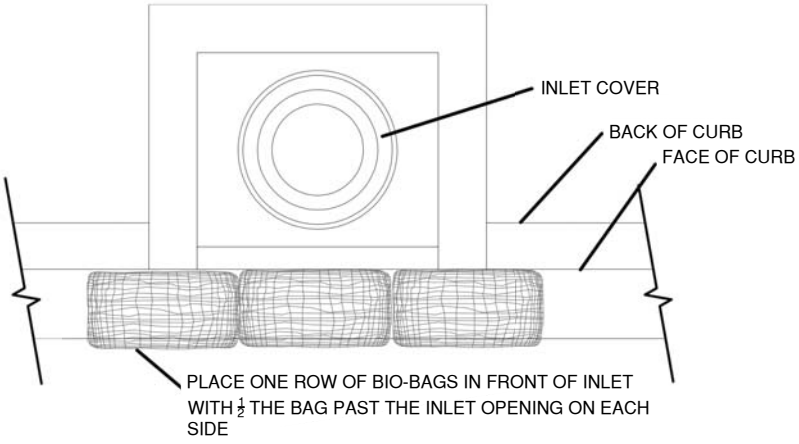

CURB INLET CATCH BASIN
BIO-BAG INLET PROTECTION

NOTES:
1. ADDITIONAL MEASURES MUST BE CONSIDERED DEPENDING ON SOIL TYPES.
2. BIO-BAGS SHOULD BE STAKED WHERE APPLICABLE USING (2) 1"X2"X3' WOOD STAKES OR APPROVED EQUAL.
3. BIO-FILTER BAGS MUST BE REMOVED AND HAULED OFF-SITE FOR DISPOSAL BY THE CONTRACTOR UPON PROJECT STABILIZATION.
4. BIO-FILTER BAGS MAY BE USED SHORT TERM WITH UTILITY WORK AND WITH PHASING OF DEVELOPMENT.
5. BIO-BAGS SHALL NOT BE USED ON ROADS WITH BIKE LANES.

MAINTENANCE NOTES:
6. SEDIMENT BARRIERS SHALL BE MAINTAINED UNTIL UPHILL AREA IS PERMANENTLY STABILIZED.
7. AT NO TIME SHALL MORE THAN 2-INCHES OF SEDIMENT BE ALLOWED TO ACCUMULATE BEHIND BIO-FILTER BAGS.
8. NEW SEDIMENT BARRIERS SHALL BE INSTALLED AS REQUIRED TO CONTROL SEDIMENT TRANSPORT.

DRAWN LJC		CITY OF BEND		SCALE NTS
DIV EROSION			STANDARD DRAWING	DATE 12/1/17
REV	DATE		710 NW WALL ST., BEND, OREGON 97701	APPR
	12/1/17	CITY OF BEND	BIO-FILTER BAG INLET PROTECTION	STD DWG E-2A

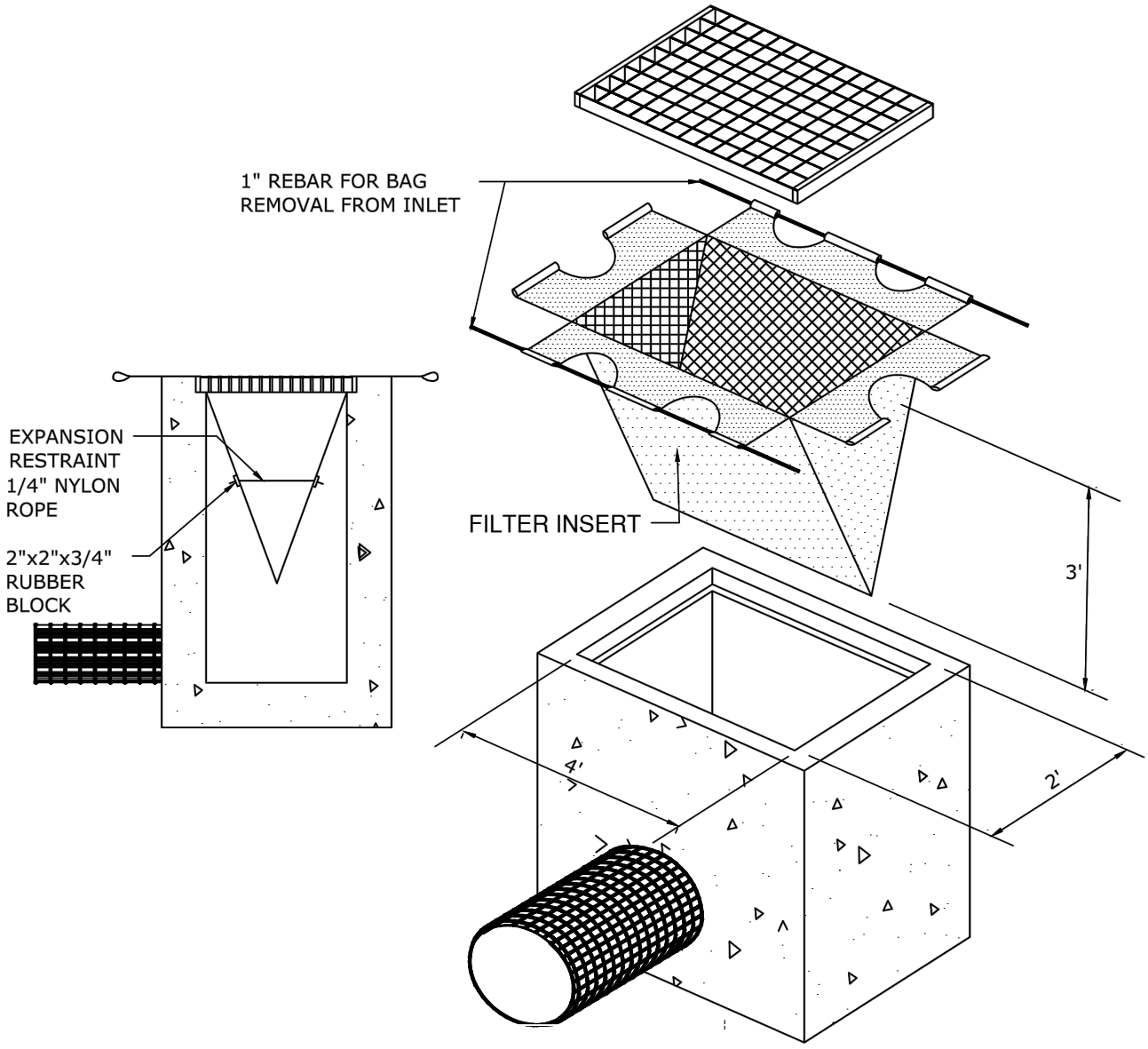

FILTER INSERT

NOTES:

1. INSTALL PRE-FABRICATED FILTER INSERTS ACCORDING TO MANUFACTURER'S RECOMMENDATIONS.
2. FIELD FABRICATED INSERTS ARE NOT PERMITTED.
3. PRE-FABRICATED INSERTS WITH PROVISIONS FOR OVERFLOW ARE ONLY ALLOWED WHEN ACCOMPANIED BY ADDITIONAL BMP TO PREVENT THE POTENTIAL OF SEDIMENTS ENTERING PROJECT STORM SYSTEMS.

DRAWN LJC	CITY OF BEND	CITY OF BEND	SCALE NTS
DIV EROSION		STANDARD DRAWING	DATE 12/1/17
REV / DATE: 12/1/17		710 NW WALL ST., BEND, OREGON 97701	APPR
		FILTER INSERT INLET PROTECTION	STD DWG E-2B

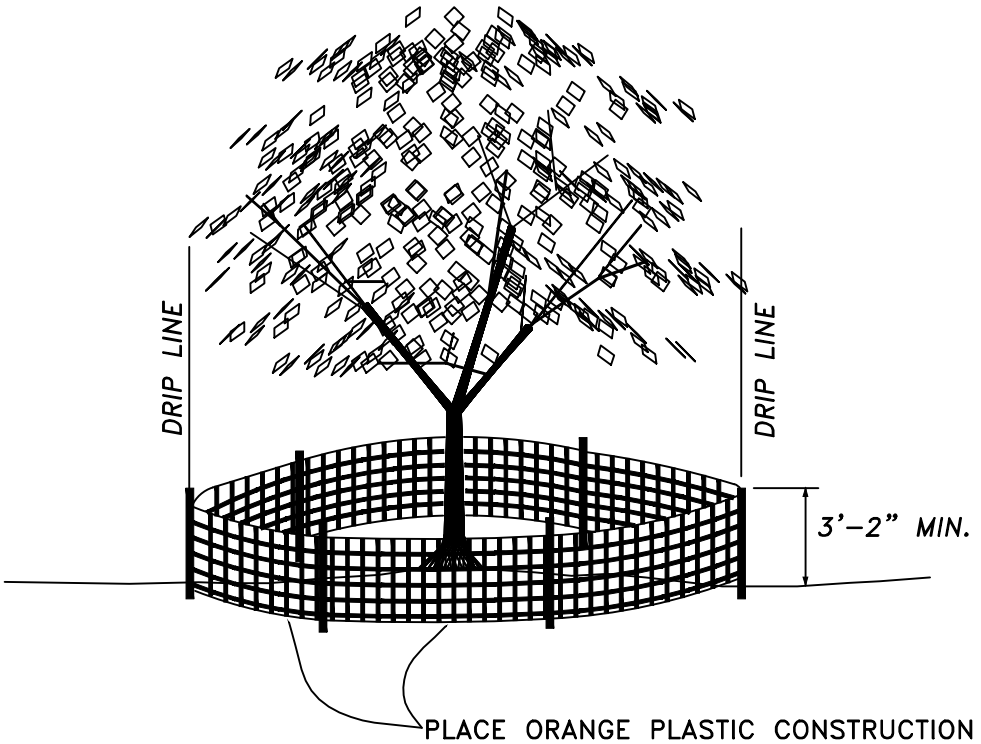

PLACE ORANGE PLASTIC CONSTRUCTION FENCING AROUND TREE OR PROTECTED VEGETATION PERIMETERS AT DRIP LINE, PRIOR TO ANY CONSTRUCTION ACTIVITIES ON SITE.

NOTE:

1. USE WOOD OR METAL FENCE POSTS. POST SPACING & DEPTH SHALL BE INSTALLED TO ADEQUATELY SUPPORT THE FENCE IN AN UPRIGHT MANNER.
2. MAXIMUM FENCE OPENINGS SHALL BE 2"X2".

DRAWN LJC	CITY OF BEND	CITY OF BEND	SCALE NTS
DIV EROSION		STANDARD DRAWING	DATE 12/1/17
REV / DATE: 12/1/17		710 NW WALL ST., BEND, OREGON 97701	APPR
		TREE/VEGETATION PROTECTION FENCING	STD DWG E-3

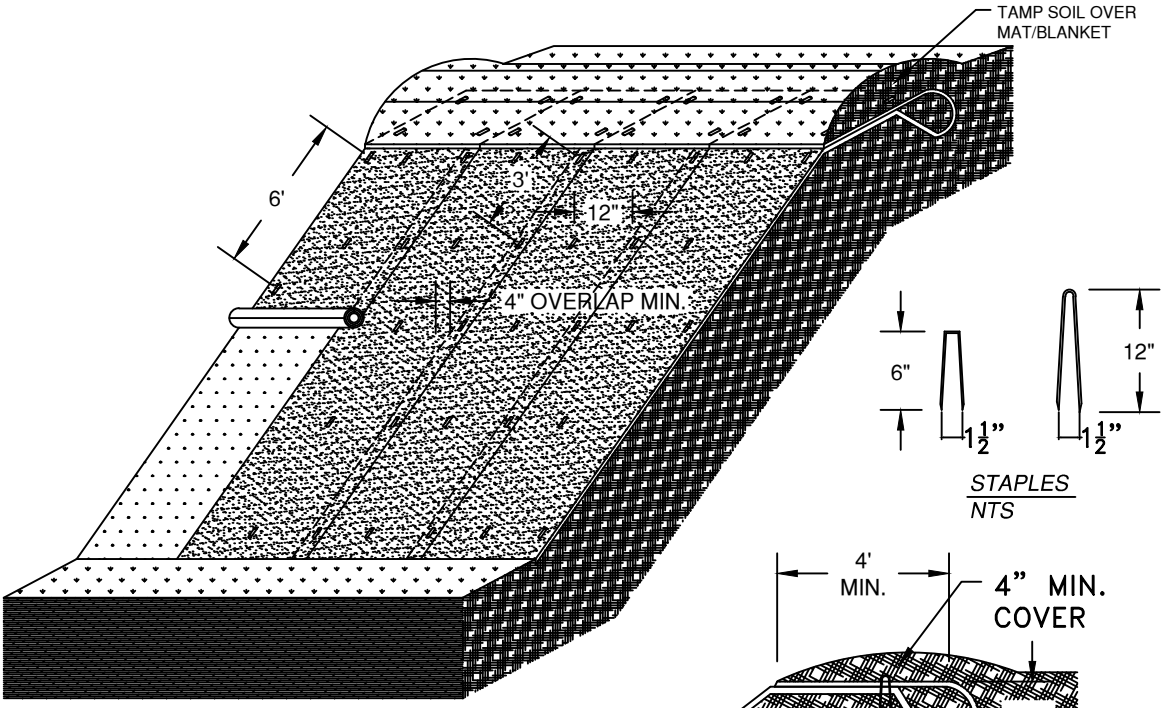

ISOMETRIC VIEW
NTS

STAPLES
NTS

TOP BERM
NTS

NOTES:
1. MATS/BLANKETS SHOULD BE INSTALLED VERTICALLY DOWN SLOPE.
2. SLOPE SURFACE SHALL BE FREE OF ROCKS, CLODS, STICKS, AND GRASS. MATS/BLANKETS SHALL HAVE GOOD SOIL CONTACT.
3. APPLY PERMANENT SEEDING BEFORE PLACING BLANKETS.
4. LAY BLANKETS LOOSELY AND STAKE OR STAPLE TO MAINTAIN DIRECT CONTACT WITH SOIL. DO NOT STRETCH.

SLOPE SOIL STABILIZATION
NTS

DRAWN LJC	CITY OF BEND	CITY OF BEND STANDARD DRAWING 710 NW WALL ST., BEND, OREGON 97701	SCALE NTS
DIV EROSION			DATE 12/1/17
REV / DATE: 12/1/17			APPR
	CITY OF BEND	EROSION BLANKET - SLOPE INSTALLATION	STD DWG E-5

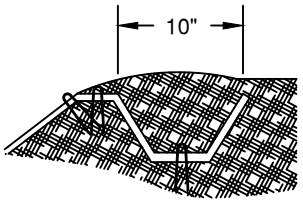

LONGITUDINAL ANCHOR TRENCH
NTS

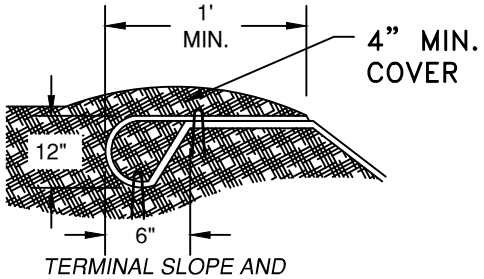

TERMINAL SLOPE AND CHANNEL ANCHOR TRENCH
NTS

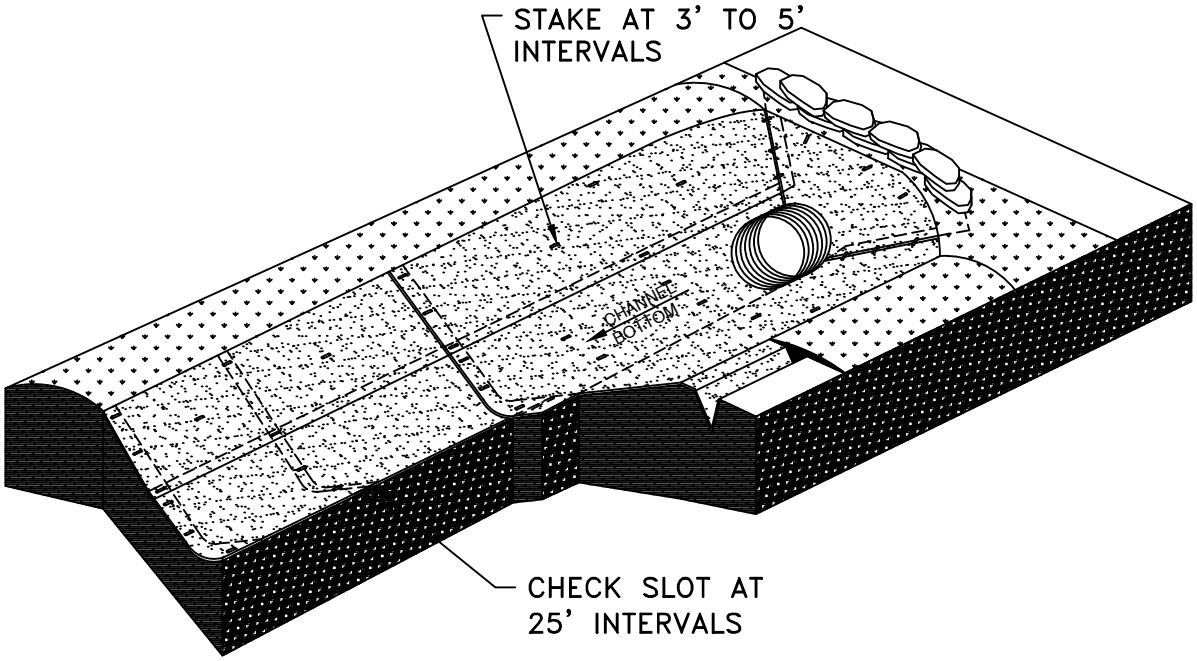

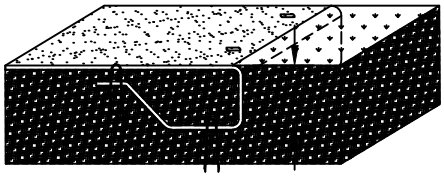

INITIAL ANCHOR TRENCH
NTS

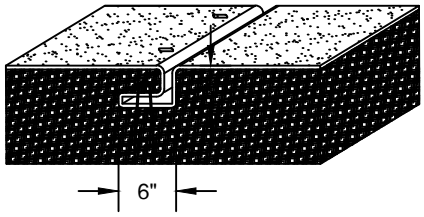

INTERMITTENT CHECK SLOT
NTS

NOTES:
1. CHECK SLOTS TO BE CONSTRUCTED PER MANUFACTURERS RECOMMENDATIONS.
2. STAKING OR STAPLING LAYOUT PER MANUFACTURES RECOMMENDATIONS.
3. SLOPE SURFACE SHALL BE FREE OF ROCKS, CLODS, STICKS, AND GRASS. MATS/BLANKETS SHALL HAVE GOOD SOIL CONTACT.
4. APPLY PERMANENT SEEDING BEFORE PLACING BLANKETS.
5. LAY BLANKETS LOOSELY AND STAKE OR STAPLE TO MAINTAIN DIRECT CONTACT WITH SOIL. DO NOT STRETCH.

CHANNEL STABILIZATION
NTS

DRAWN LJC	CITY OF BEND	CITY OF BEND	SCALE NTS
DIV EROSION		STANDARD DRAWING	DATE 12/1/17
REV DATE		710 NW WALL ST., BEND, OREGON 97701	APPR
		EROSION BLANKET - CHANNEL INSTALLATION	STD DWG E-6

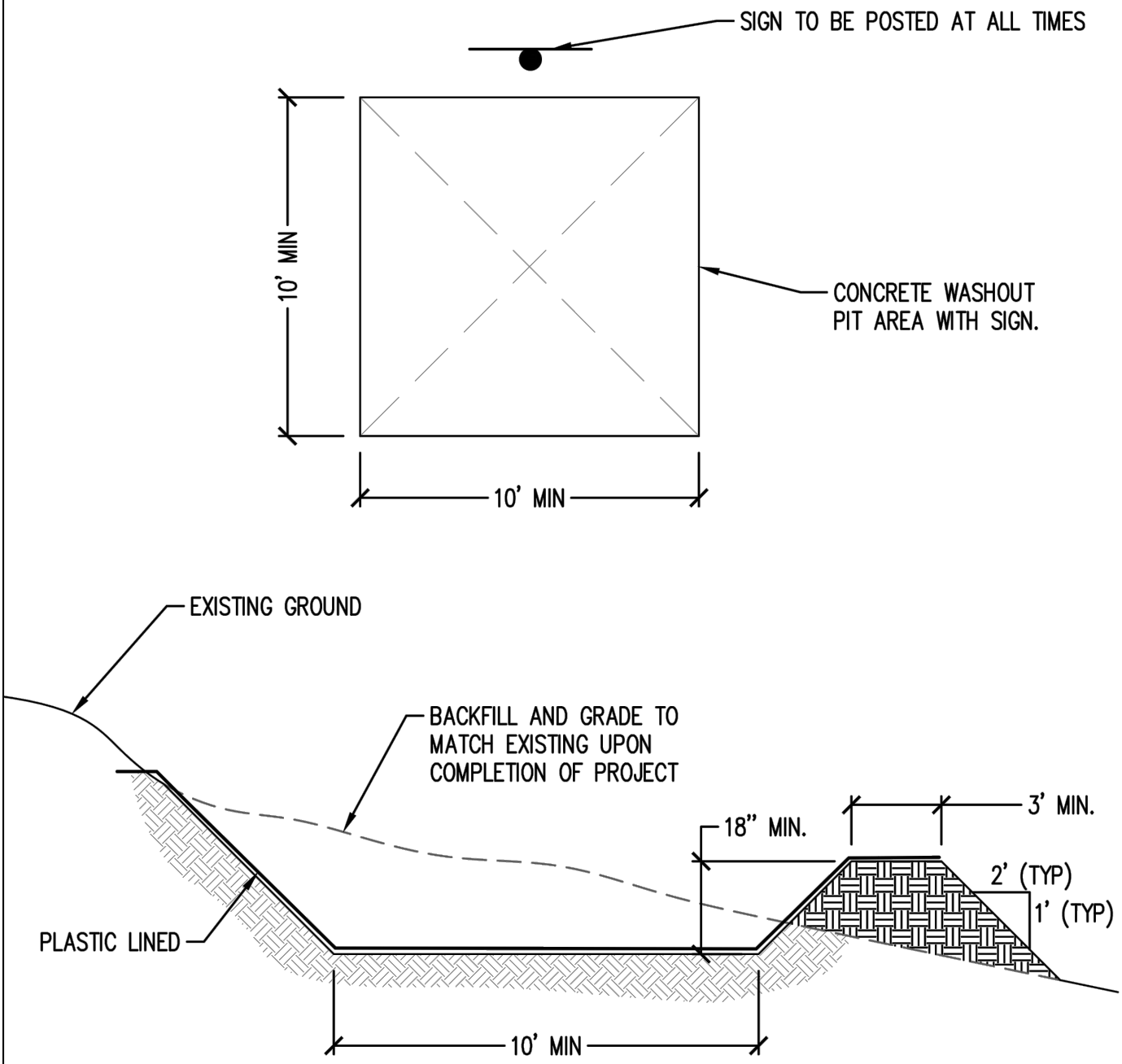

NOTES:

1. REMOVE AND LEGALLY DISPOSE OF WASTE MATERIAL WHEN IT ACCUMULATES TO $\frac{2}{3}$ OF WET STORAGE CAPACITY OF PIT.
2. CONCRETE WASHOUT AREA TO BE REPAIRED AND/OR ENLARGED AS NECESSARY TO MAINTAIN CAPACITY FOR CONCRETE.
3. UPON COMPLETION OF CONSTRUCTION ACTIVITIES REQUIRING CONCRETE WASHOUT, THE WASHOUT SHALL BE REMOVED AND THE AREA RESTORED TO FINISH GRADE AND EXISTING CONDITION.
4. CONTRACTOR SHALL TAKE PRECAUTIONS SO AS TO NOT OVERFLOW PIT.

DRAWN LJC DIV EROSION REV DATE	CITY OF BEND	CITY OF BEND STANDARD DRAWING 710 NW WALL ST., BEND, OREGON 97701 CONCRETE TRUCK WASHOUT	SCALE NTS DATE 12/1/17 APPR STD DWG E-7

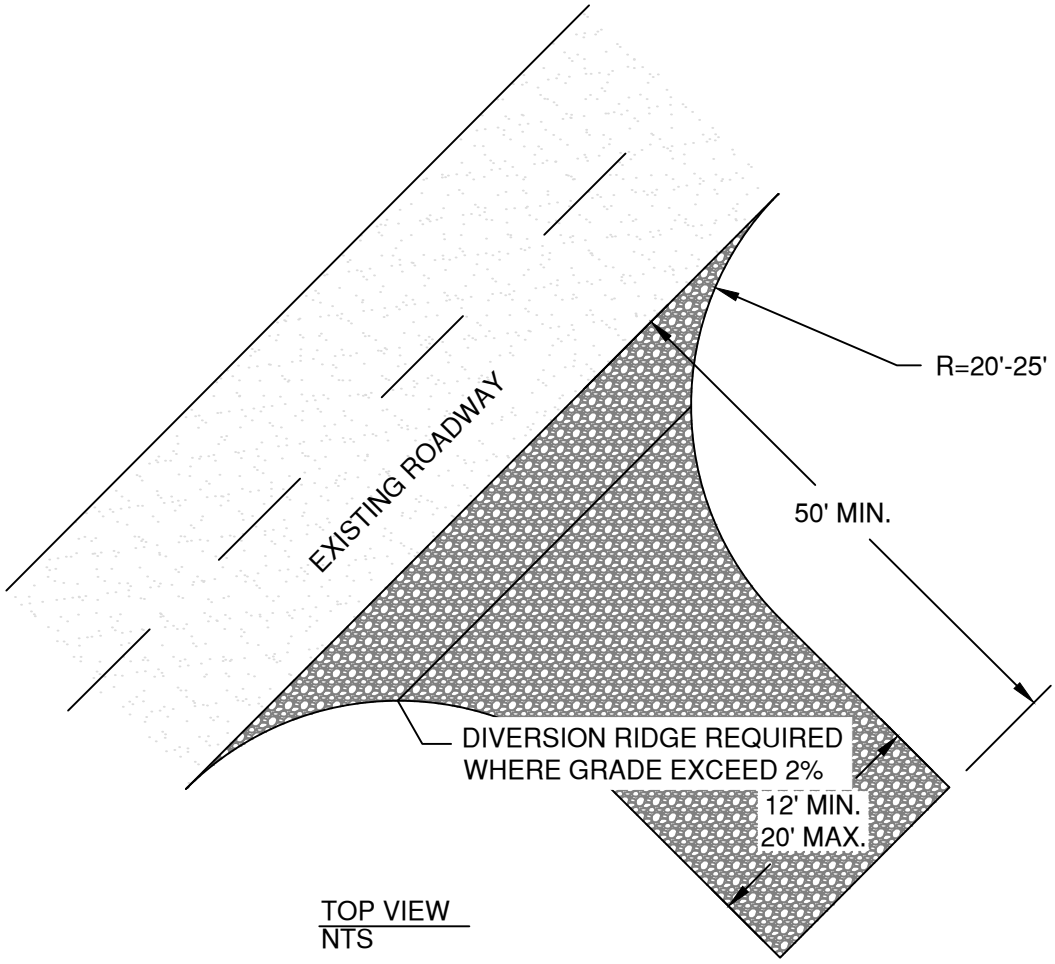

TOP VIEW
NTS

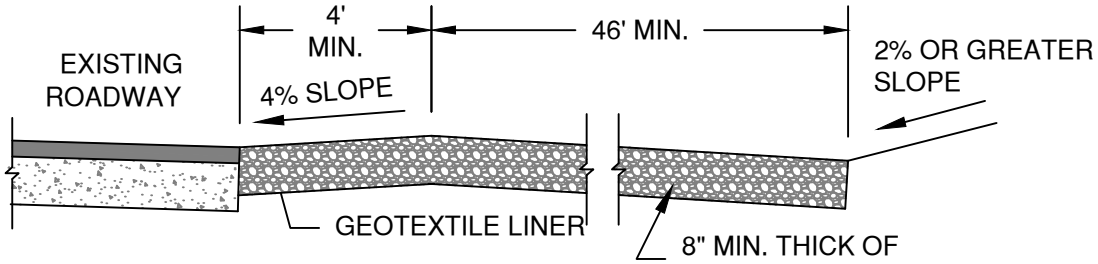

PROFILE VIEW
NTS

NOTES:

1. CONSTRUCTION ENTRANCE TO BE INSTALLED PRIOR TO ANY OTHER WORK ON SITE AND IS APPLICABLE AT ALL POINTS OF INGRESS AND EGRESS UNTIL SITE IS STABILIZED.
2. TRUCK WASH WATER MAY BE REQUIRED ON SITE TO PREVENT TRACKING ONTO EXISTING ROADWAY.
3. THE CONSTRUCTION AND USE OF THIS ENTRANCE IN NO WAY NEGATES THE CONTRACTOR`S RESPONSIBILITIES TO PREVENT TRACKING OF MATERIAL ONTO EXISTING ROADWAY.
4. MUST BE MAINTAINED IN A CONDITION THAT WILL PREVENT TRACKING OR DIRECT FLOW OF MUD/SEDIMENT ONTO STREETS. PERIODIC TOP DRESSING WITH STONE AND/OR CLEANOUT OR REPAIR SHALL BE NECESSARY.
5. ANY MATERIAL THAT STILL MAKES IT ONTO THE ROAD MUST BE SWEPT UP IMMEDIATELY.

DRAWN		CITY OF BEND	CITY OF BEND STANDARD DRAWING 710 NW WALL ST., BEND, OREGON 97701	SCALE NTS
DIV EROSION				DATE 3/31/19
REV	DATE			APPR
1			GRAVEL CONSTRUCTION ENTRANCE	STD DWG E-8

CITY OF BEND STANDARD DRAWINGS

Landscaping (L)

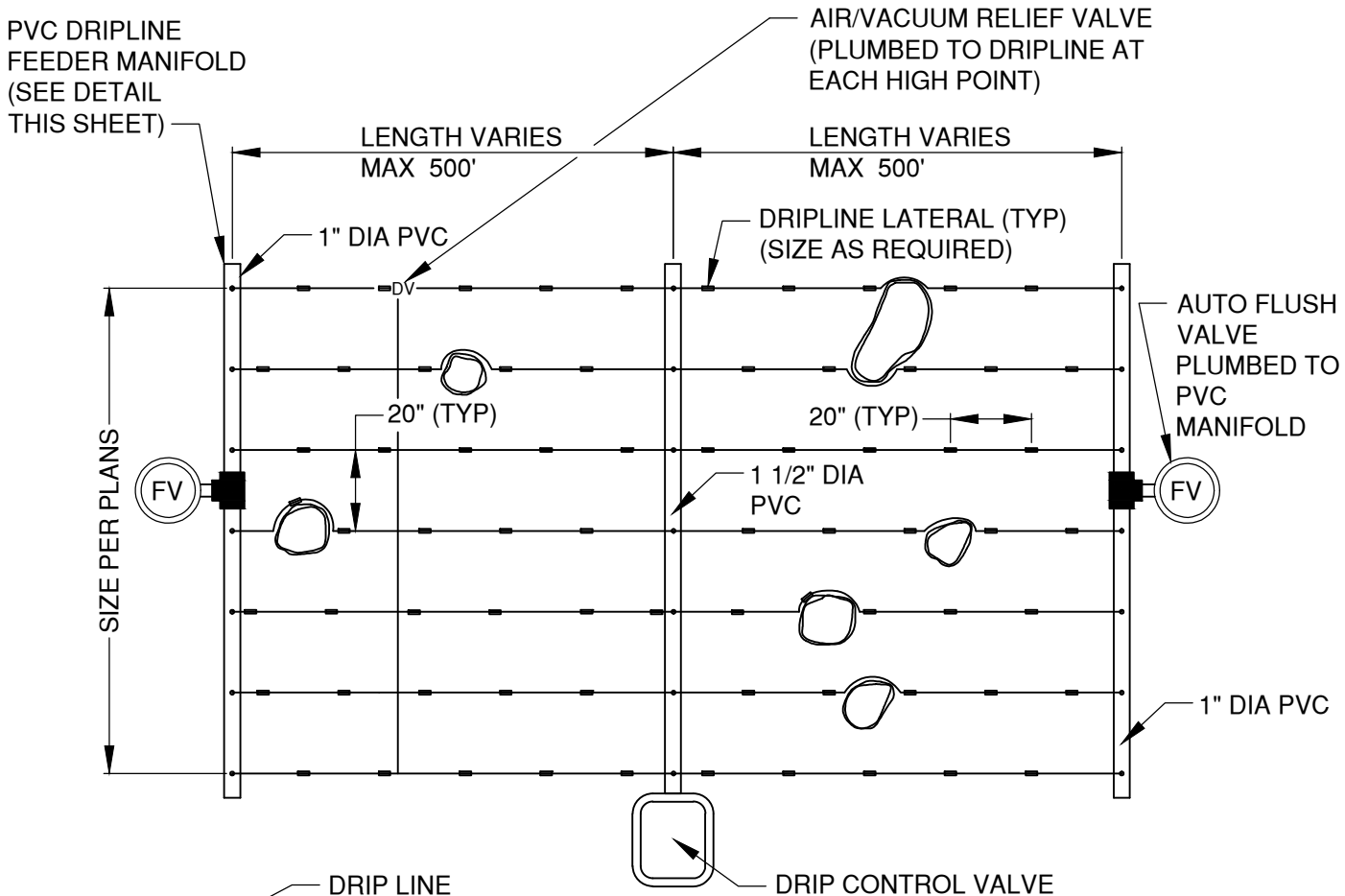

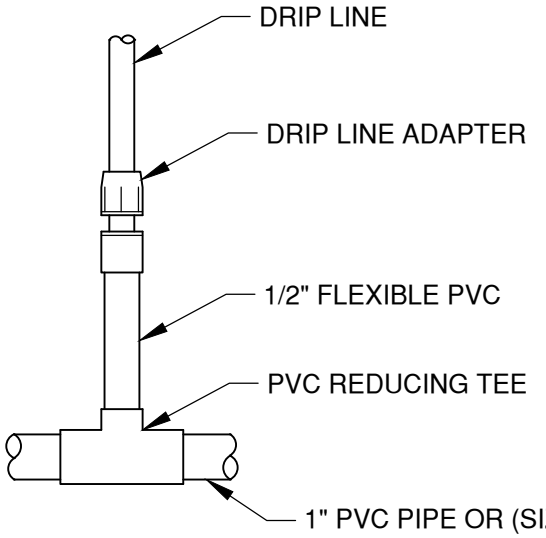

TYPICAL PVC DRIPLINE MANIFOLD CONNECTION

NOTES:

1. RELOCATE DRIP LINES AROUND OBSTACLES AS NEEDED

DRAWN LJC	CITY OF BEND	CITY OF BEND	SCALE NTS
DIV LNDSCP		STANDARD DRAWING	DATE 12/1/17
REV DATE		710 NW WALL ST., BEND, OREGON 97701	APPR
		PLANTING OR TURF BED DRIP LAYOUT	STD DWG L-1

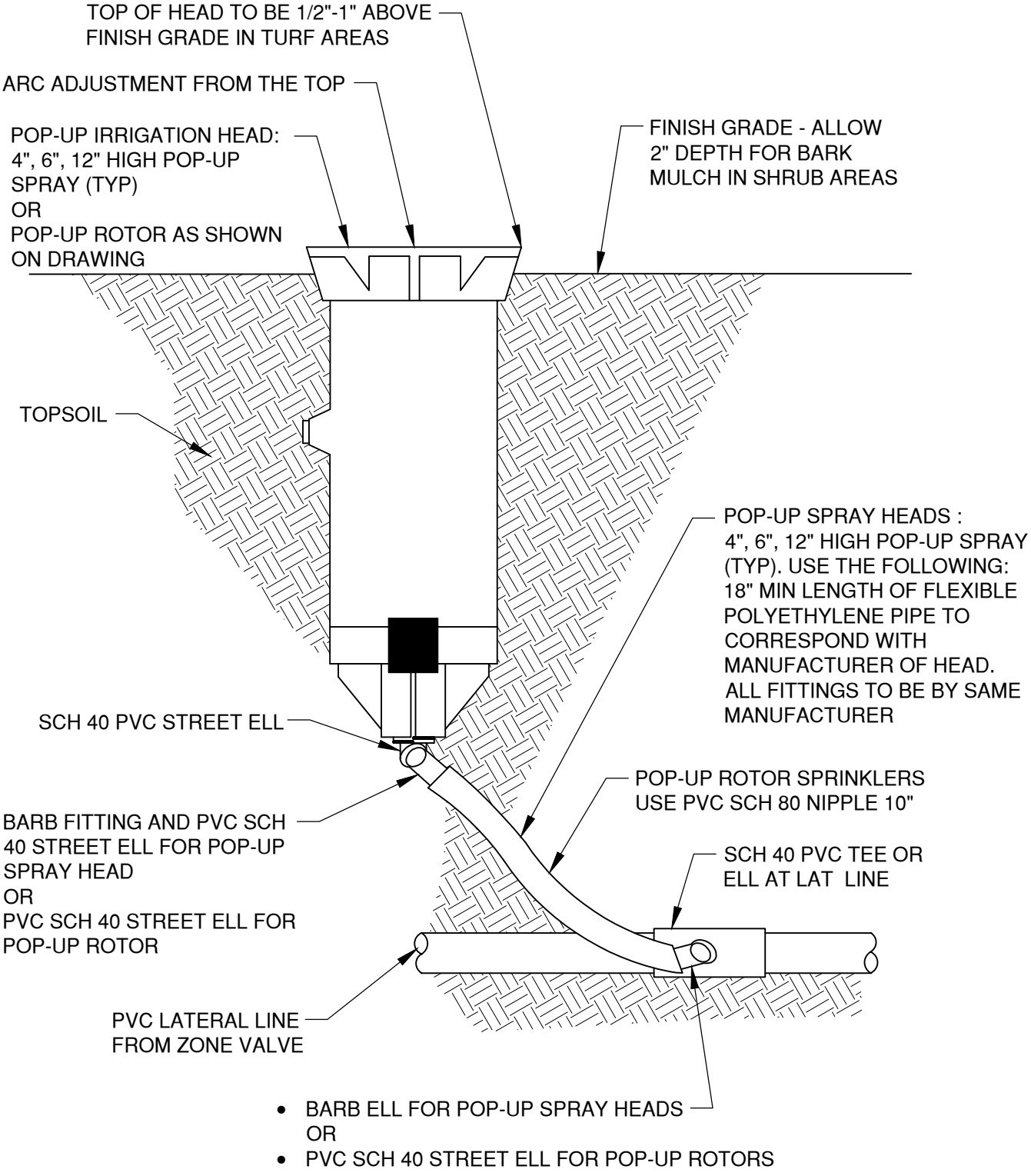

DRAWN LJC	CITY OF BEND	CITY OF BEND	SCALE NTS
DIV LNDSCP		STANDARD DRAWING	DATE 12/1/17
REV DATE		710 NW WALL ST., BEND, OREGON 97701	APPR
		SPRINKLER HEAD AND JOINTS	STD DWG L-2

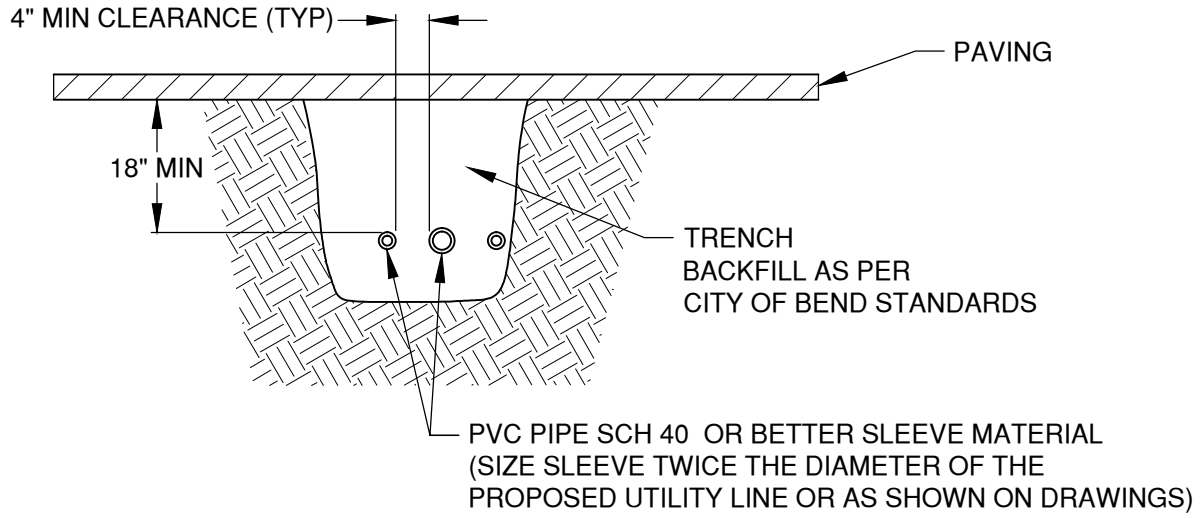

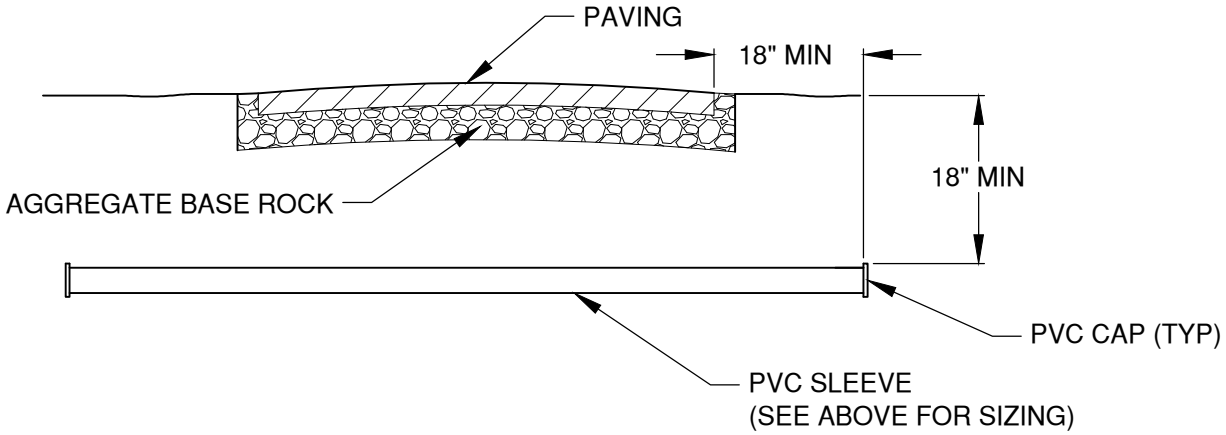

DRAWN LJC DIV LNDSCP REV DATE	CITY OF BEND	CITY OF BEND STANDARD DRAWING 710 NW WALL ST., BEND, OREGON 97701 IRRIGATION SLEEVE UNDER PAVING	SCALE NTS DATE 12/1/17 APPR STD DWG L-3

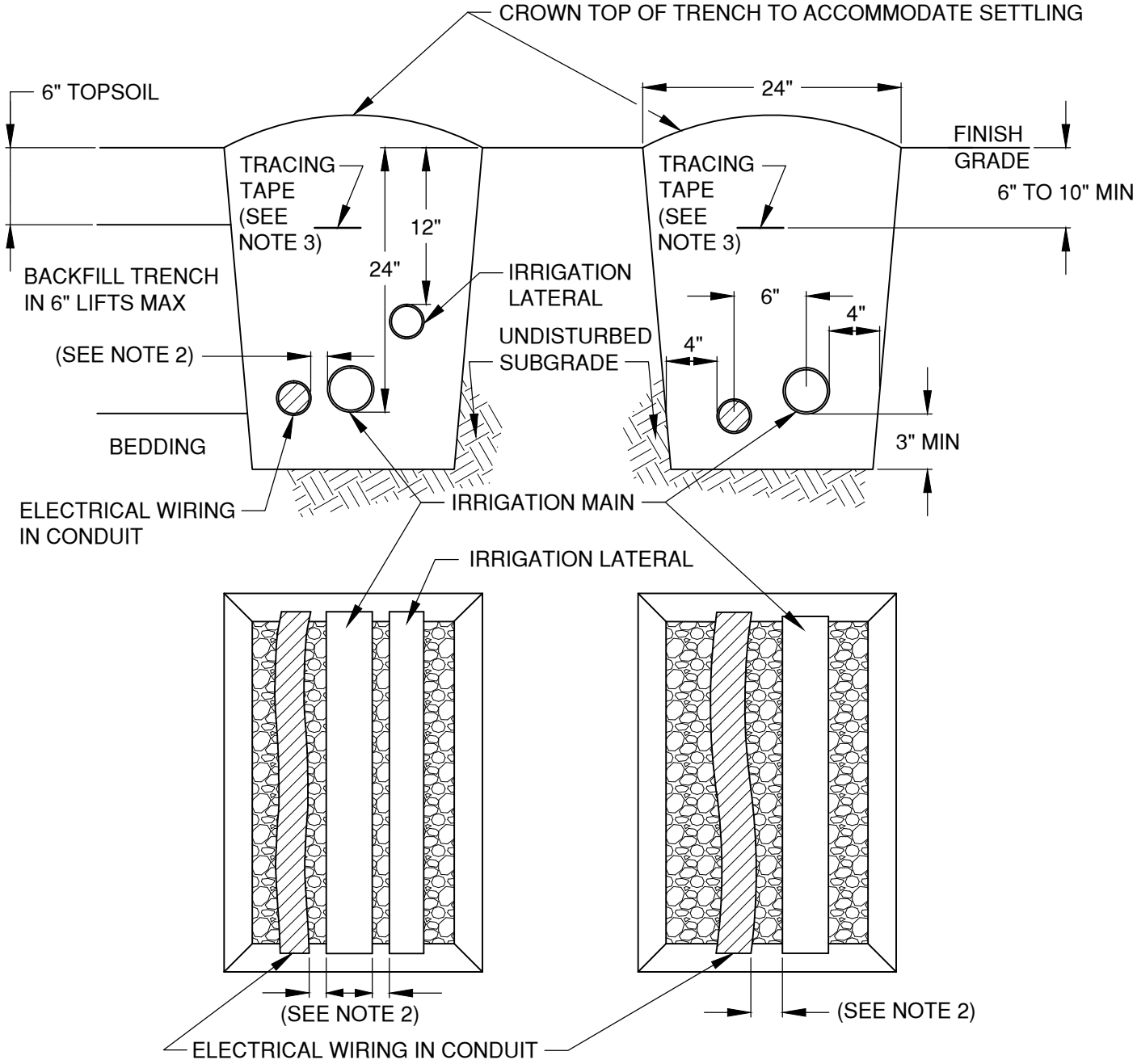

NOTES:

1. MINIMUM DEPTH OVER PVC PIPE:
   - 10" FOR 1-1/4" OR SMALLER
   - 12" FOR 1-1/2" TO 2" PIPE
   - 14" FOR 2-1/2" TO 3" LATERALS
   - 18" FOR MAINLINE PIPING AND SLEEVES
2. CLEARANCE BETWEEN PIPE:
   - 4" FOR PIPE 2" AND SMALLER
   - 6" FOR LARGER PIPE
3. PROVIDE A DETECTABLE TAPE OR WIRE USING A CONTINUOUS MINIMUM 14 GAUGE SINGLE STRAND LOCATOR WIRE IN TRENCH A MINIMUM 6" TO 10" BELOW FINISH GRADE. TRACING TAPE OR WIRE SHALL BE LOCATED A MINIMUM 6" ABOVE PIPING ON MAINLINE INSTALLATIONS

DRAWN LJC	CITY OF BEND	CITY OF BEND	SCALE NTS
DIV LNDSCP		STANDARD DRAWING	DATE 12/1/17
REV / DATE		710 NW WALL ST., BEND, OREGON 97701	APPR
		IRRIGATION - TYPICAL TRENCH	STD DWG L-4

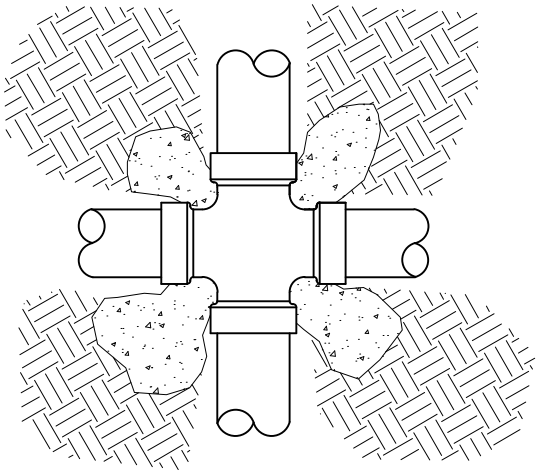

CROSS

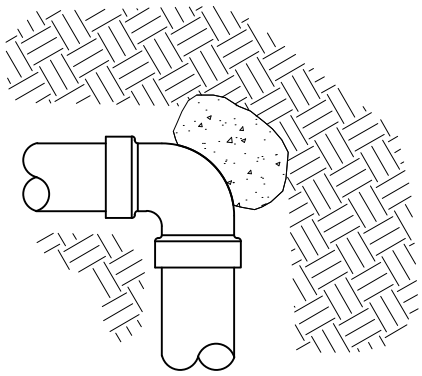

ELL

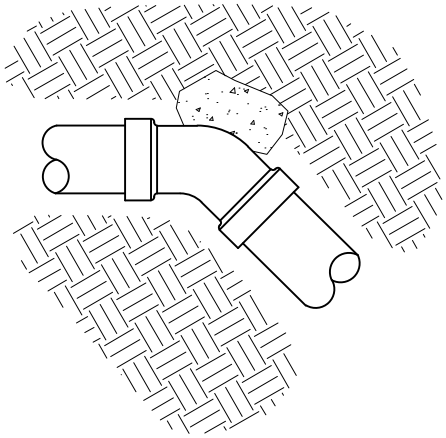

45° ELL

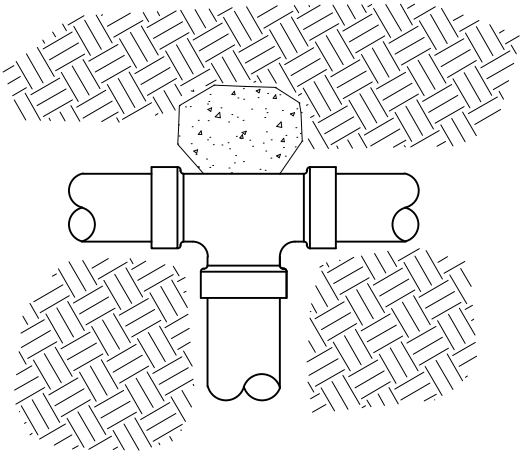

TEE

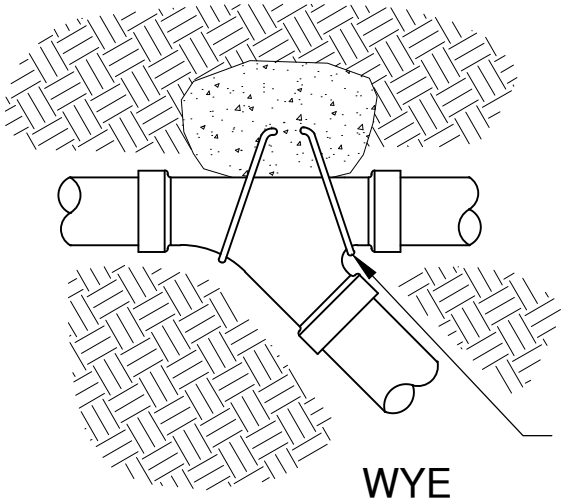

WYE

NOTES:

1. SUPPLY LINES 3" IN DIAMETER AND LARGER SHALL RECEIVE THRUST BLOCKS
2. USE A MINIMUM 1 CU FT OF CONCRETE IN EACH THRUST BLOCK POUR

DRAWN LJC	CITY OF BEND	CITY OF BEND	SCALE NTS
DIV LNDSCP		STANDARD DRAWING	DATE 12/1/17
REV DATE		710 NW WALL ST., BEND, OREGON 97701	APPR
		IRRIGATION FITTINGS	STD DWG L-5

1 30" LINEAR LENGTH OF WIRE, COILED

2 WATER PROOF CONNECTION (1 OF 2)

3 ID TAG

4 VALVE BOX WITH COVER: AMETEK STANDARD OR EQUAL

5 FINISH GRADE/TOP OF MULCH ALLOW 2" DEPTH MIN FOR BARK IF LOCATED IN SHRUB BED

6 REMOTE CONTROL VALVE: AS SPECIFIED ON DRAWING

7 PVC CLASS 200 PIPE

8 PVC SADDLE FEMALE THREAD

9 TREATED WOOD OR BRICK SUPPORT (LENGTH AS REQ'D.)

10 CONTROL WIRING 24 VAC

11 PVC MAINLINE PIPE

12 SCH 80 MALE ADAPTER

13 PVC ELECTRICAL CONDUIT SIZE AS SHOWN ON DRAWINGS

14 PVC SCH 40

15 GRAVEL BED AT BOTTOM OF BOX 6" MIN DEPTH

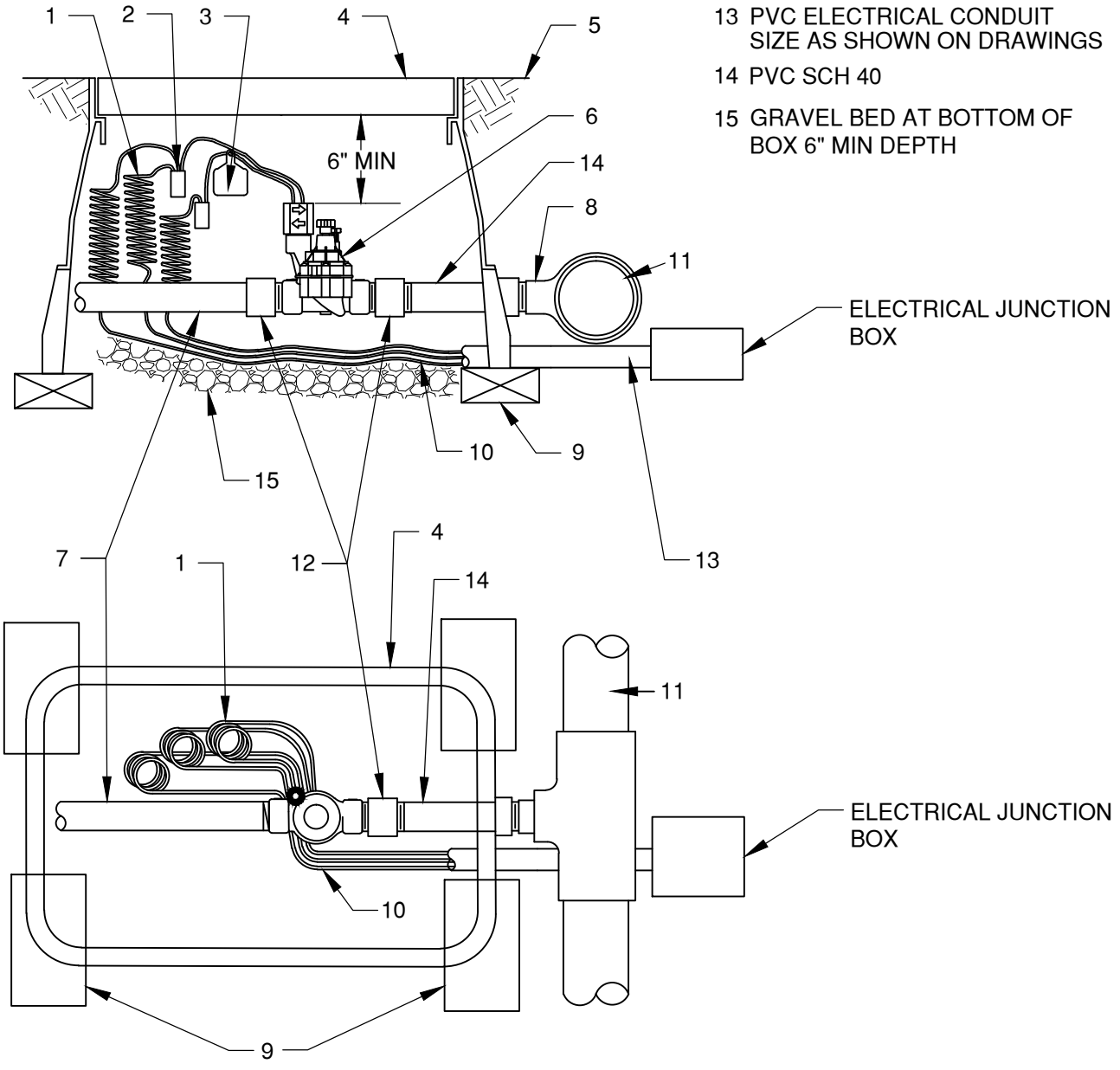

DRAWN LJC	CITY OF BEND	CITY OF BEND	SCALE NTS
DIV LNDSCP		STANDARD DRAWING	DATE 12/1/17
REV DATE		710 NW WALL ST., BEND, OREGON 97701	APPR
		IRRIGATION REMOTE CONTROL VALVE	STD DWG L-6

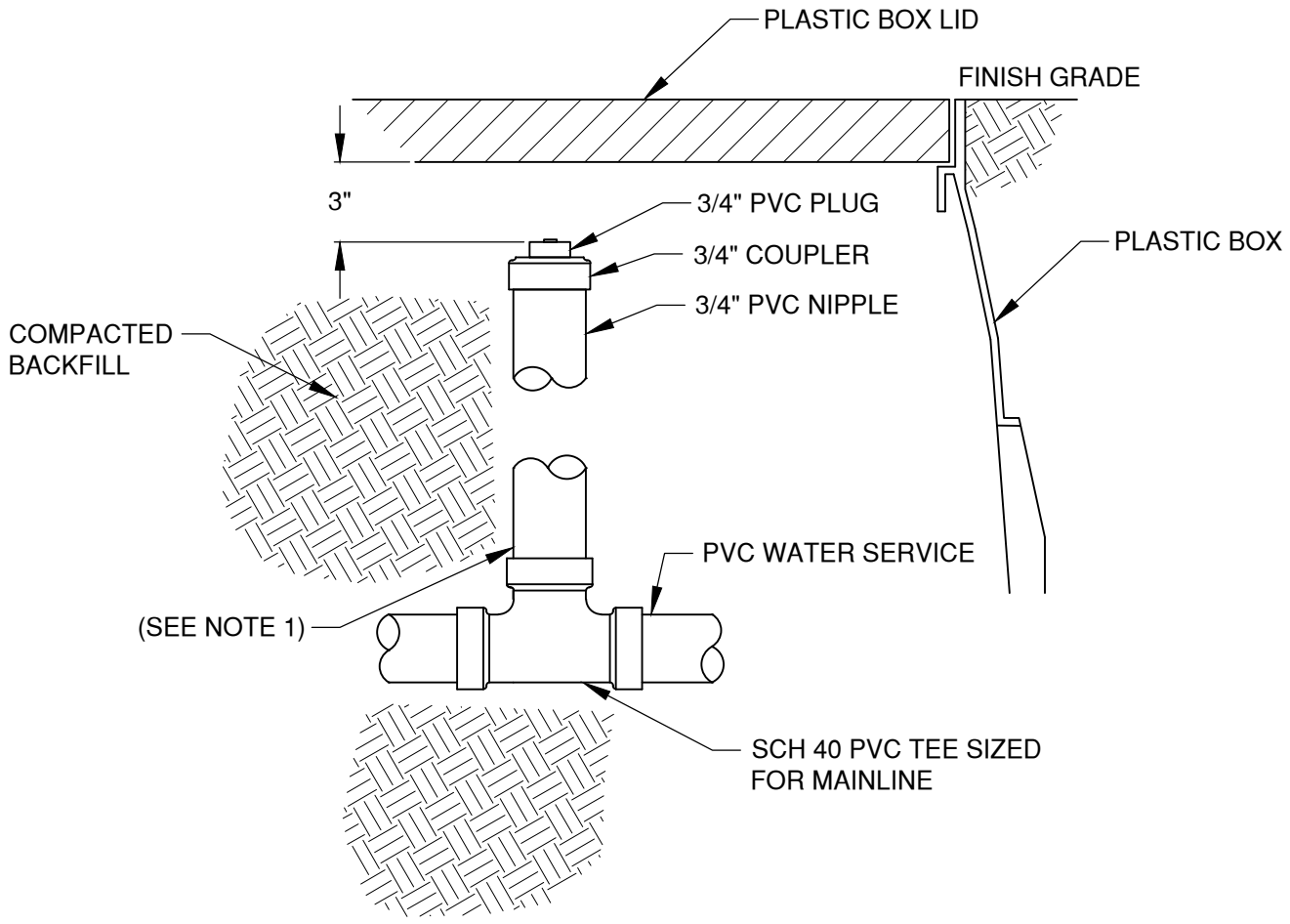

NOTES:

1. PROVIDE PVC BUSHINGS AS REQUIRED TO REDUCE SIZE FROM TEE
2. PROVIDE ALL THREADED PVC CONNECTIONS WITH A NON-HARDENING JOINT COMPOUND, COMPATIBLE WITH MANUFACTURERS RECOMMENDATION

DRAWN LJC DIV LNDSCP REV DATE	CITY OF BEND	CITY OF BEND STANDARD DRAWING 710 NW WALL ST., BEND, OREGON 97701 IRRIGATION BLOW OUT	SCALE NTS DATE 12/1/17 APPR STD DWG L-7

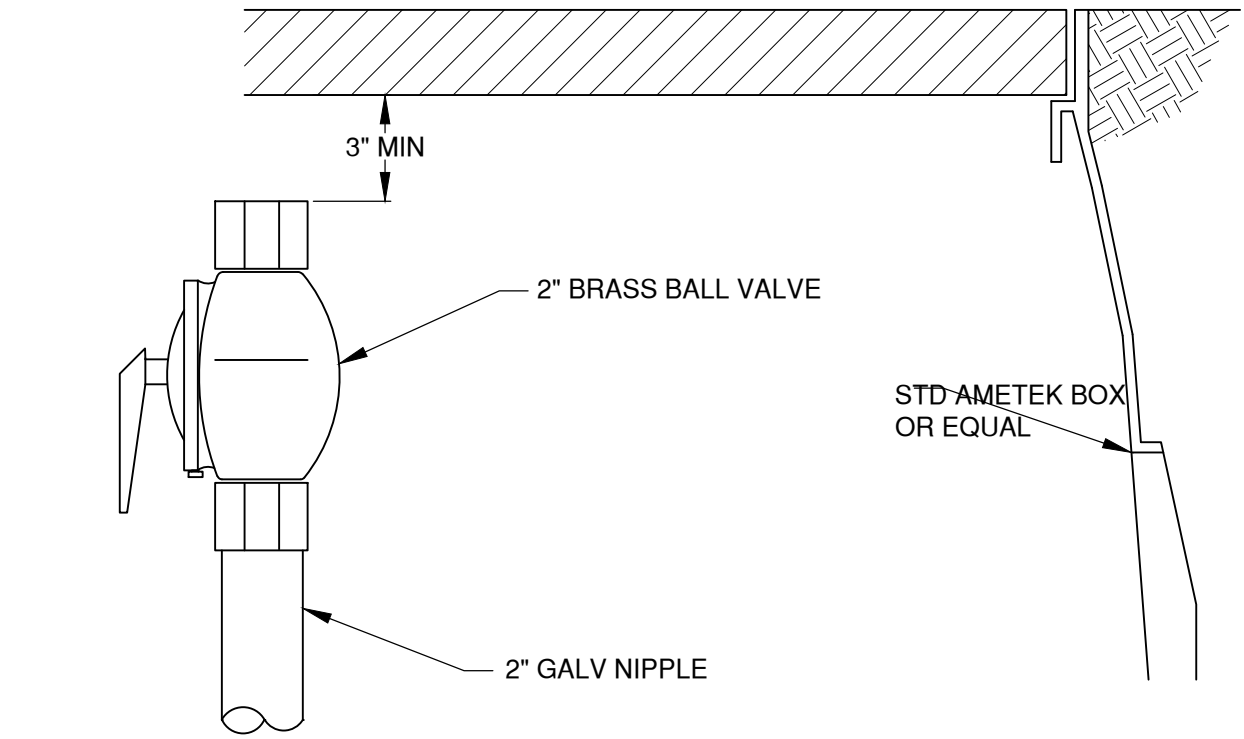

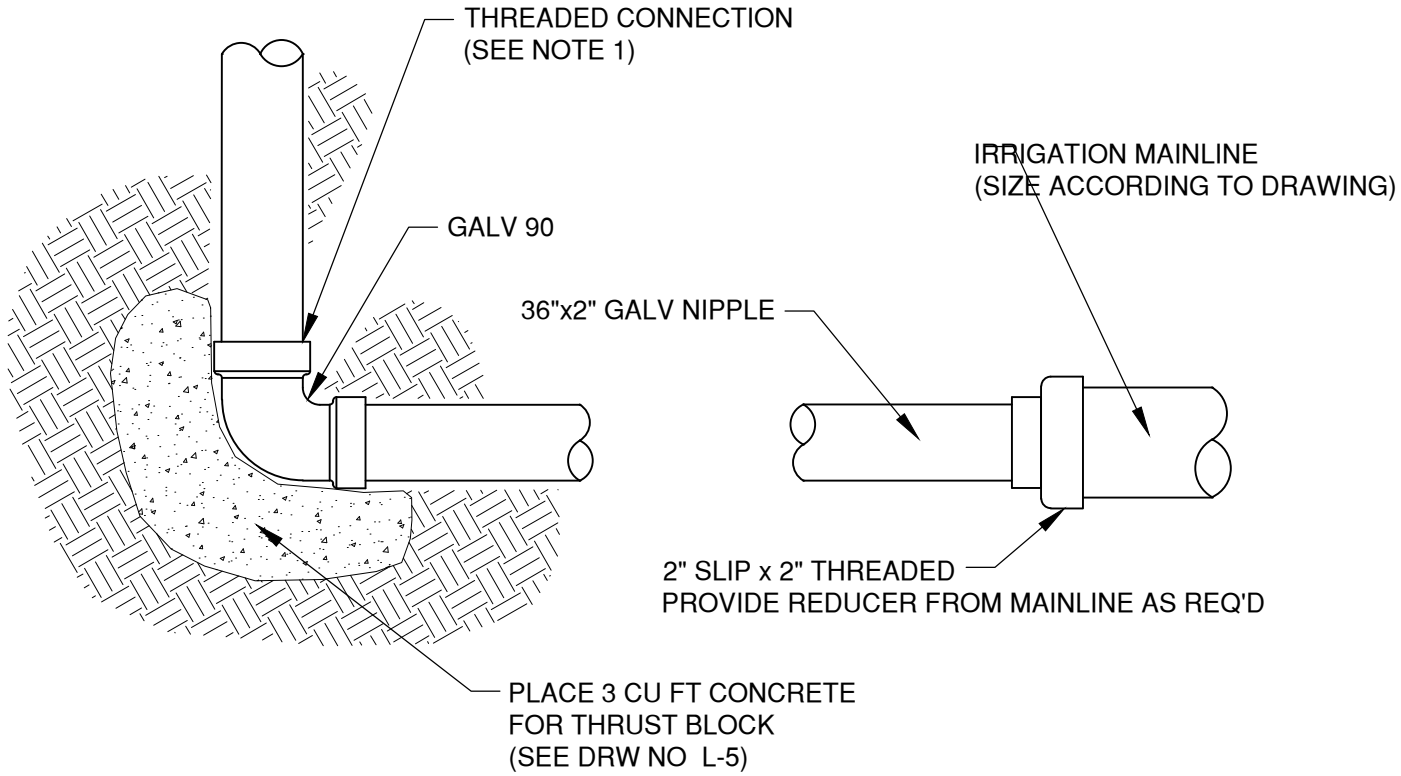

NOTES:

1. PROVIDE ALL THREADED CONNECTIONS WITH A NON-HARDENING, JOINT COMPOUND, COMPATIBLE WITH MANUFACTURERS RECOMMENDATION

DRAWN LJC	CITY OF BEND	CITY OF BEND	SCALE NTS
DIV LNDSCP		STANDARD DRAWING	DATE 12/1/17
REV DATE		710 NW WALL ST., BEND, OREGON 97701	APPR
		TERMINATION POINT	STD DWG L-8

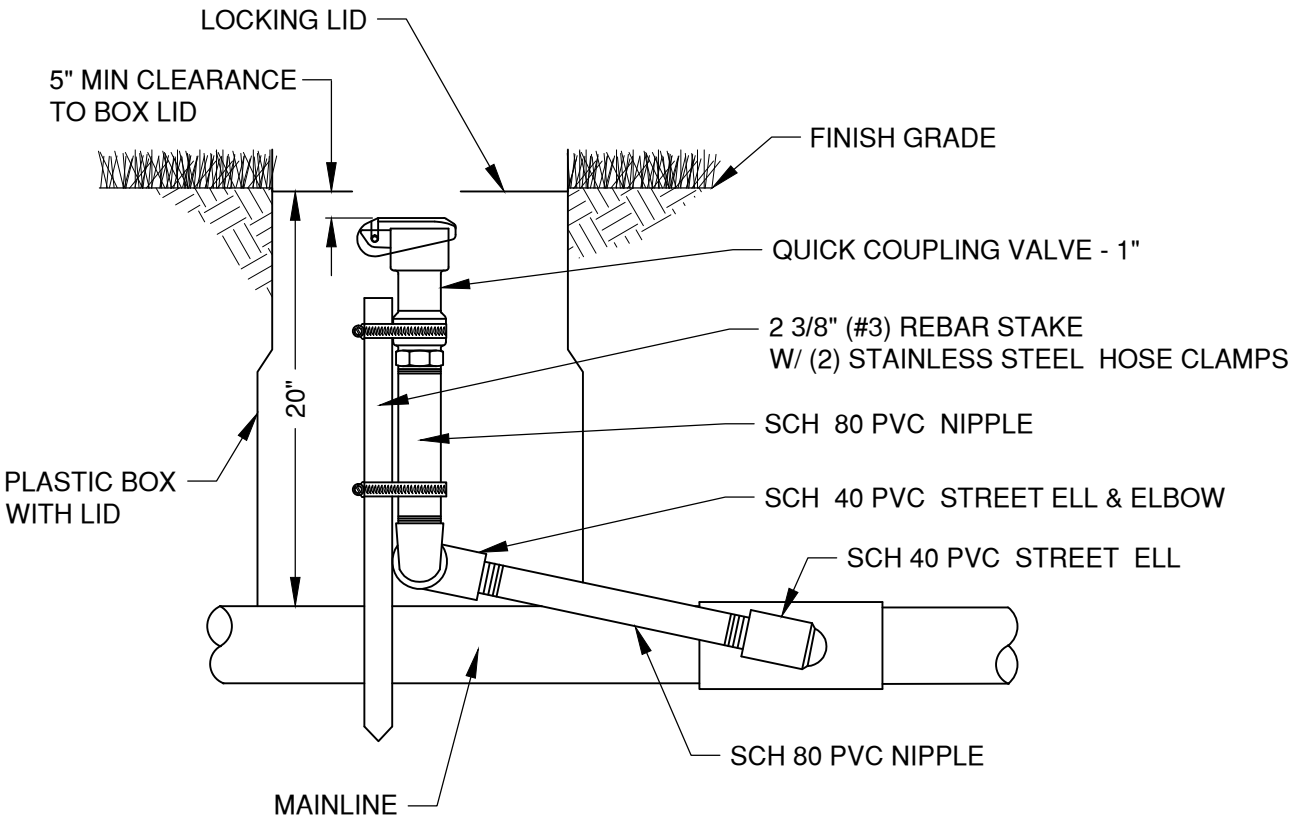

DRAWN LJC	CITY OF BEND	CITY OF BEND	SCALE NTS
DIV LNDSCP		STANDARD DRAWING	DATE 12/1/17
REV DATE		710 NW WALL ST., BEND, OREGON 97701	APPR
		QUICK COUPLING VALVE	STD DWG L-9

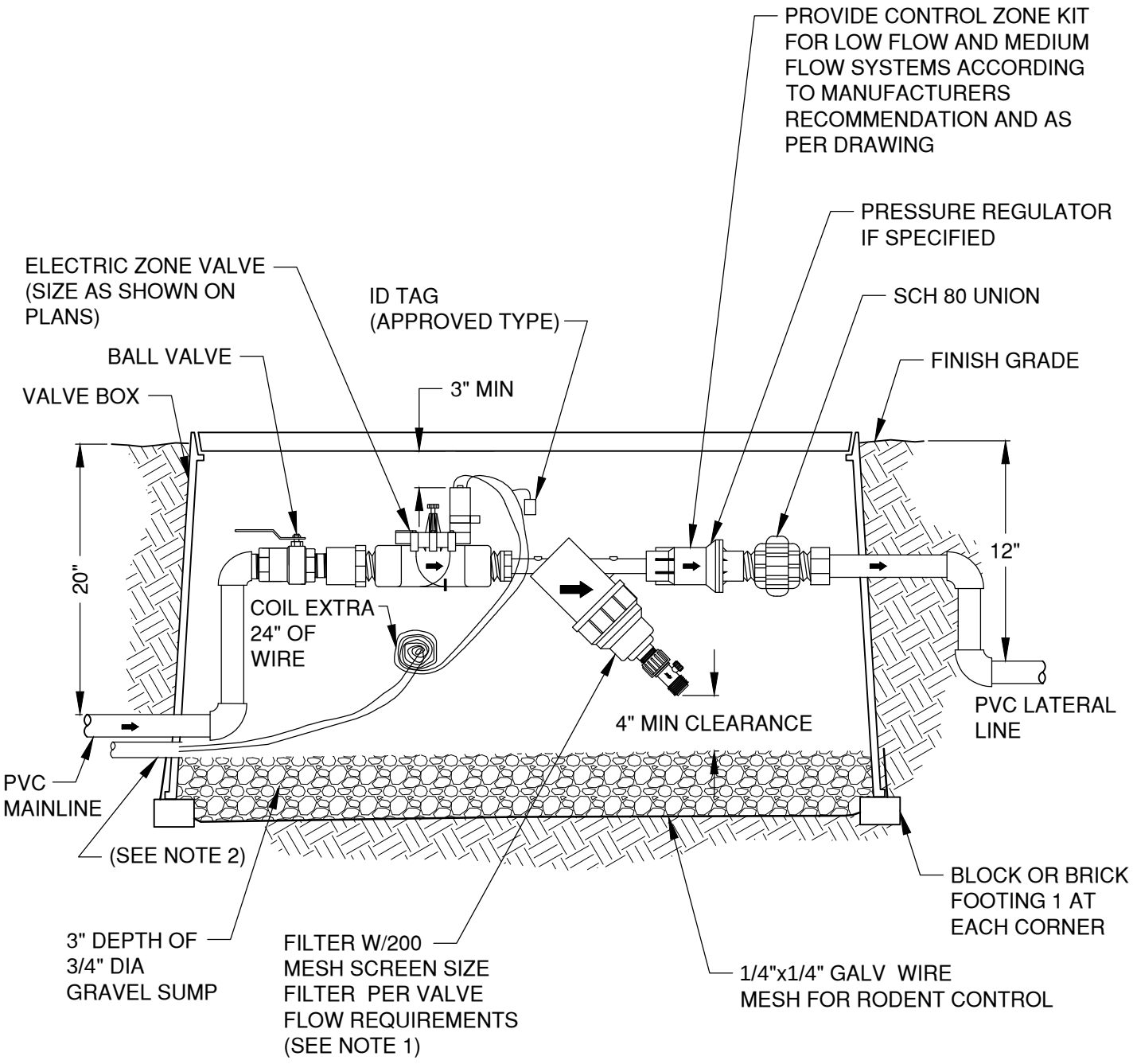

NOTES:

1. PROVIDE ADEQUATE SPACE FOR SERVICING THE SYSTEM
2. ALL ELECTRICAL WIRE TO BE INSTALLED IN APPROVED CONDUIT

DRAWN LJC	CITY OF BEND	CITY OF BEND	SCALE NTS
DIV LNDSCP		STANDARD DRAWING	DATE 12/1/17
REV DATE		710 NW WALL ST., BEND, OREGON 97701	APPR
		DRIP CONTROL VALVE, FILTER, AND REGULATOR	STD DWG L-10

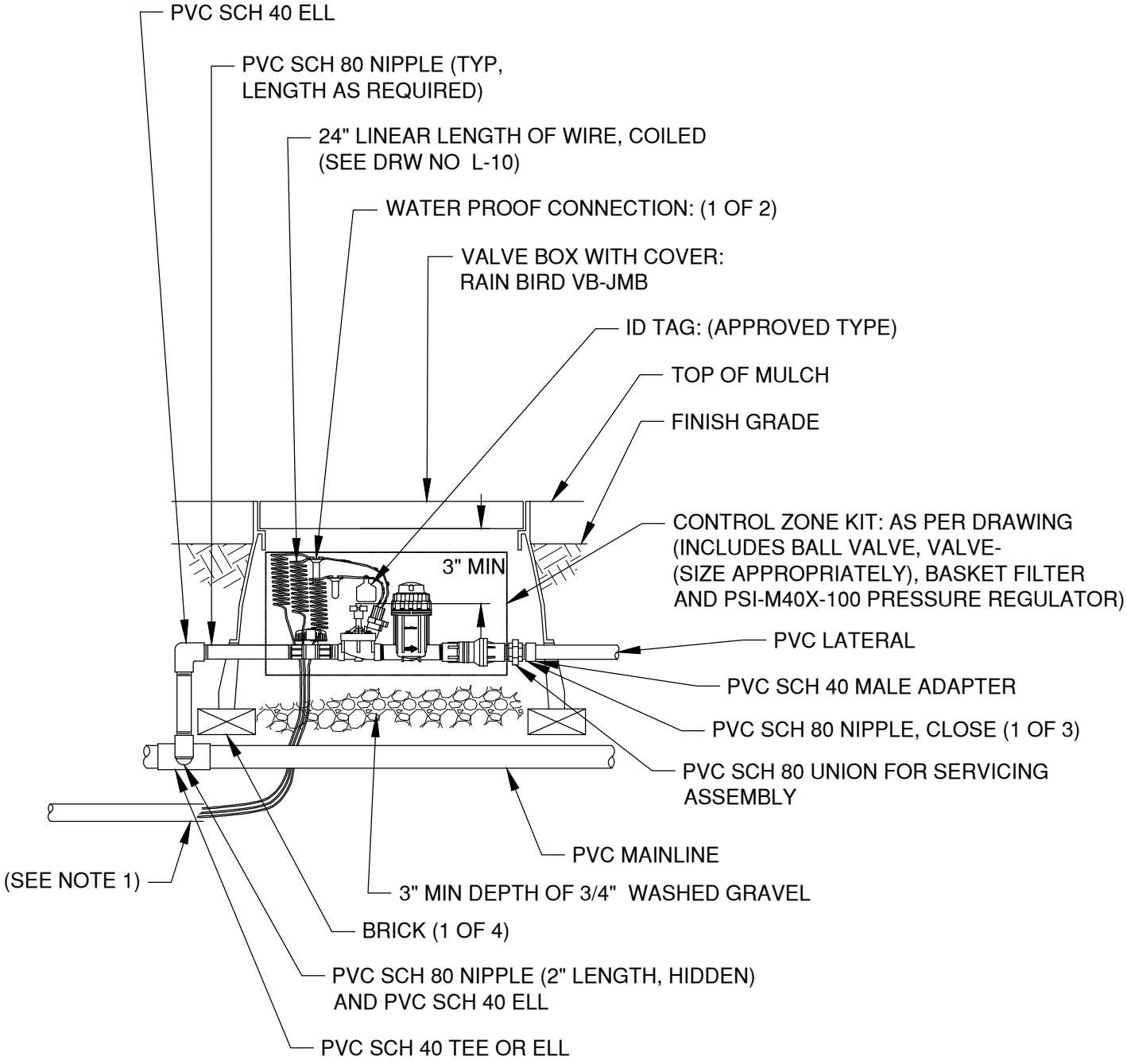

NOTES:

1. ALL ELECTRICAL WIRE TO BE INSTALLED IN APPROVED CONDUIT

DRAWN LJC DIV LNDSCP REV DATE	CITY OF BEND	CITY OF BEND STANDARD DRAWING 710 NW WALL ST., BEND, OREGON 97701 1" COMM. CONTROL ZONE KIT WITH BASKET FILTER	SCALE NTS DATE 12/1/17 APPR STD DWG L-12

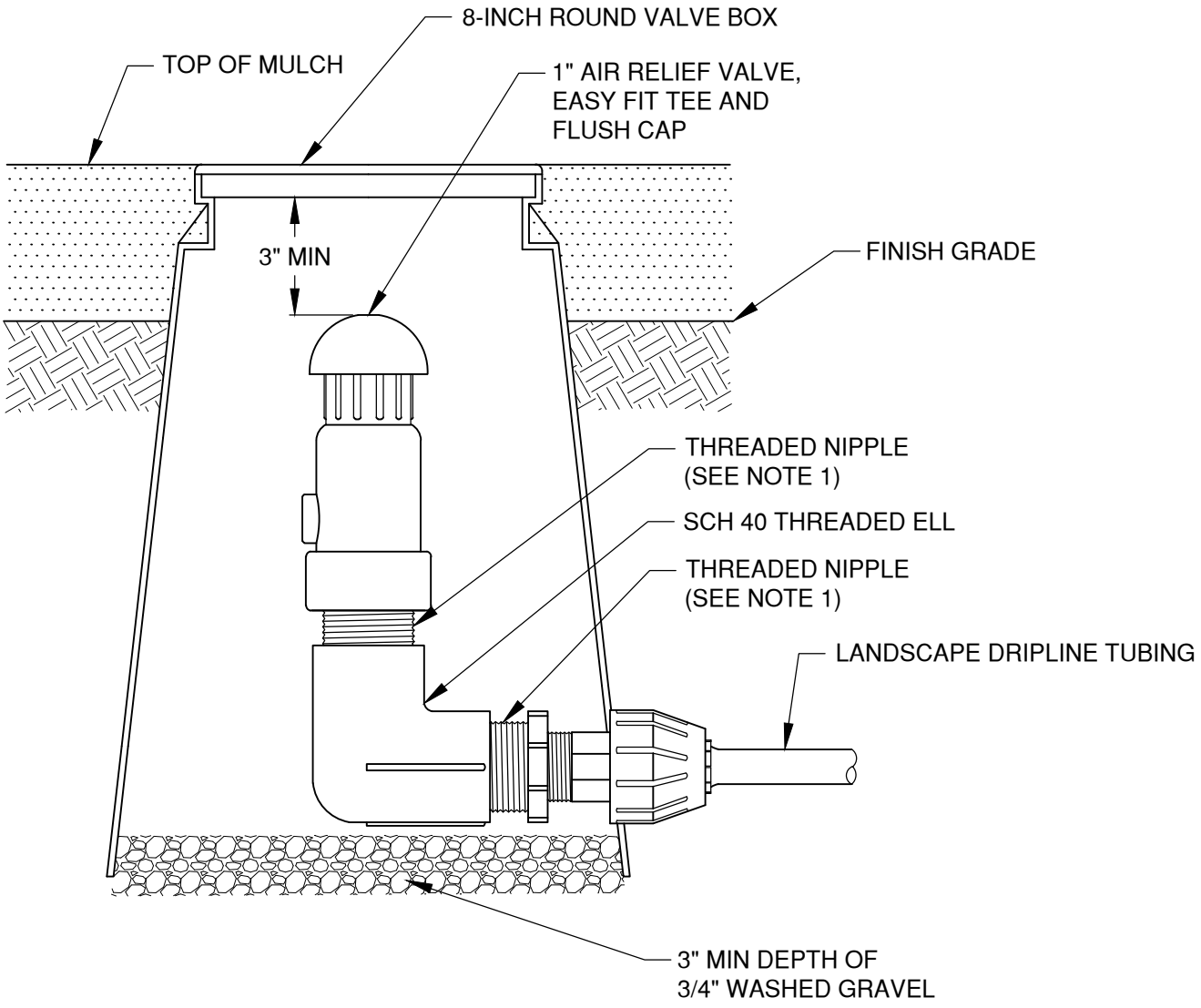

NOTES:

1. PROVIDE ALL THREADED CONNECTIONS WITH A NON-HARDENING, JOINT COMPOUND, COMPATIBLE WITH MANUFACTURERS RECOMMENDATIONS

DRAWN LJC	CITY OF BEND	CITY OF BEND	SCALE NTS
DIV LNDSCP		STANDARD DRAWING	DATE 12/1/17
REV DATE		710 NW WALL ST., BEND, OREGON 97701	APPR
		AIR RELIEF VALVE IN KIT - AR VALVE KIT	STD DWG L-13

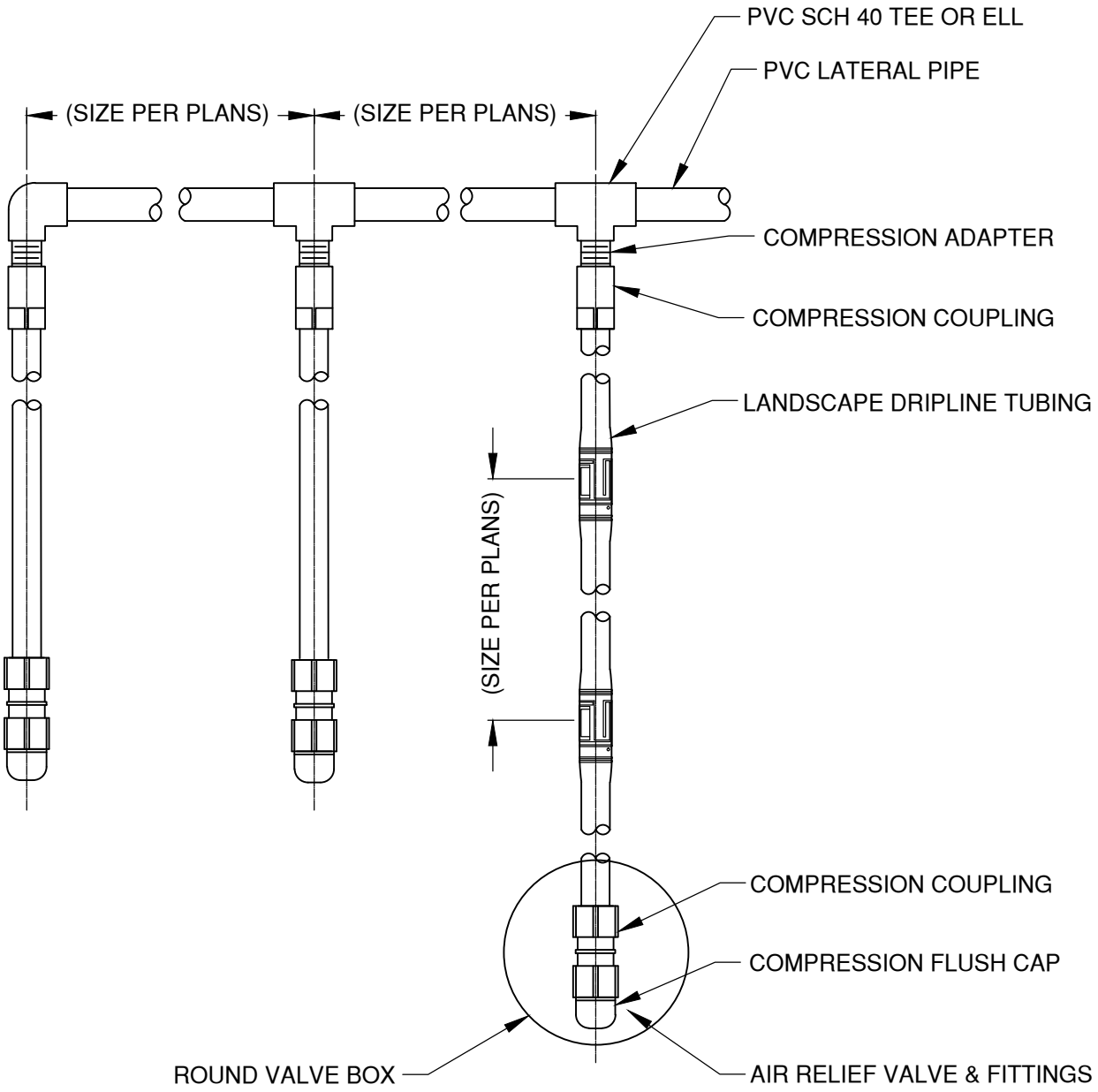

NOTES:

1. LATERAL AND EMITTER SPACING DEPENDS ON SOIL TYPE, AND PLANT SPECIES.
2. SEE OSS - DET 6110 - PLANTING OR TURF BED DRIP LAYOUT FOR OVERALL SPECIFICATION

DRAWN LJC	CITY OF BEND	CITY OF BEND STANDARD DRAWING 710 NW WALL ST., BEND, OREGON 97701	SCALE NTS
DIV LNDSCP			DATE 12/1/17
REV / DATE			APPR
		DRIP IRRIGATION MAINLINE LAYOUT	STD DWG L-14

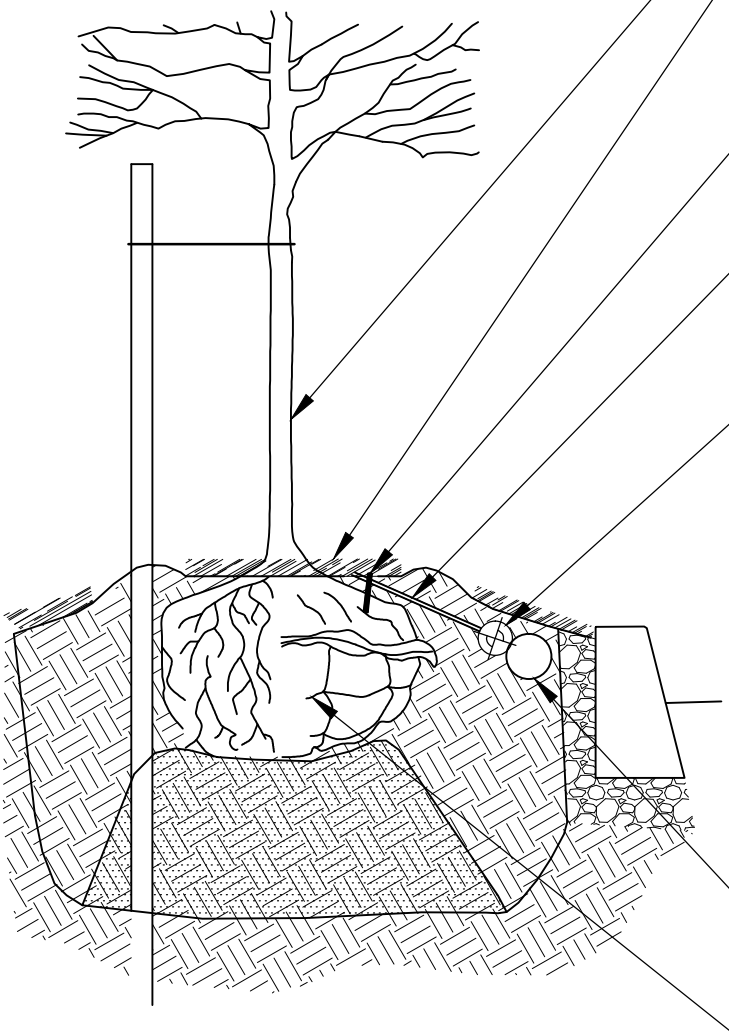

TREE OR SHRUB

MULCH AS SPECIFIED - ABOVE 1/2" DRIP LINE. 1/2" DRIP LINE TO BE LOCATED ON TOP OF FINISHED GRADE AND STAKED UNDERNEATH MULCH

STAKE AT END OF VINYL EMITTER DISTRIBUTION TUBING WITH END OF TUBE ABOVE FINISH GRADE

1/4" VINYL EMITTER DISTRIBUTION TUBING. STAKE AT END OF TUBING NEAR ROOT BALL, WITH 1/4" TUBING STAKE

DRIP EMITTERS PLUGGED INTO POLY DRIPLINE TUBING WITH SELF-PIERCING BARB CONNECTORS AT TREE LOCATIONS. SEE PLAN FOR QUANTITY PER TREE. PROVIDE EMITTERS EVENLY SPACED AROUND TREE OR SHRUB AS SPECIFIED, WITH A MIN OF 2 DISTRIBUTION POINTS PER PLANT

1/2" POLYETHYLENE DRIPLINE TUBING 2" BELOW FINISH GRADE AND STAKED 4' O/C

PLANT ROOTBALL/CONTAINER SOIL

NOTES:

1. USE MANUFACTURERS RECOMMENDED TOOL TO PERFORATE 1/2" POLYETHYLENE TUBING, FOR BARB CONNECTION POINTS OF ENTRY

DRAWN LJC	CITY OF BEND	CITY OF BEND	SCALE NTS
DIV LNDSCP		STANDARD DRAWING	DATE 12/1/17
REV DATE		710 NW WALL ST., BEND, OREGON 97701	APPR
		POINT SOURCE DRIP EMITTER	STD DWG L-15

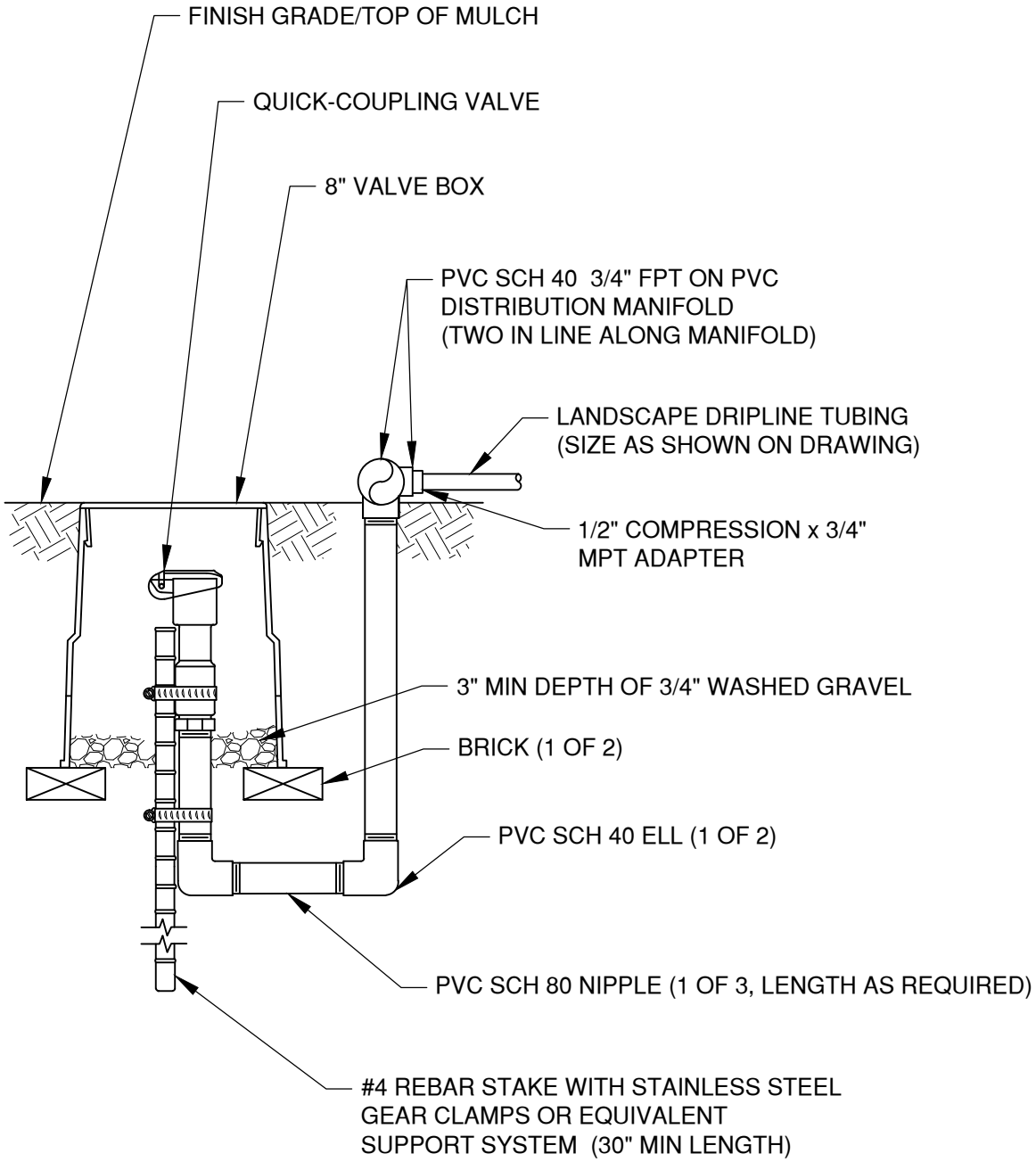

NOTES:

1. FURNISH FITTINGS AND PIPING NOMINALLY SIZED IDENTICAL TO NOMINAL QUICK COUPLING VALVE INLET SIZE

DRAWN LJC DIV LNDSCP REV DATE	CITY OF BEND	CITY OF BEND STANDARD DRAWING 710 NW WALL ST., BEND, OREGON 97701 LANDSCAPE DRIPLINE FLUSH POINT POTABLE SYSTEM	SCALE NTS DATE 12/1/17 APPR STD DWG L-17

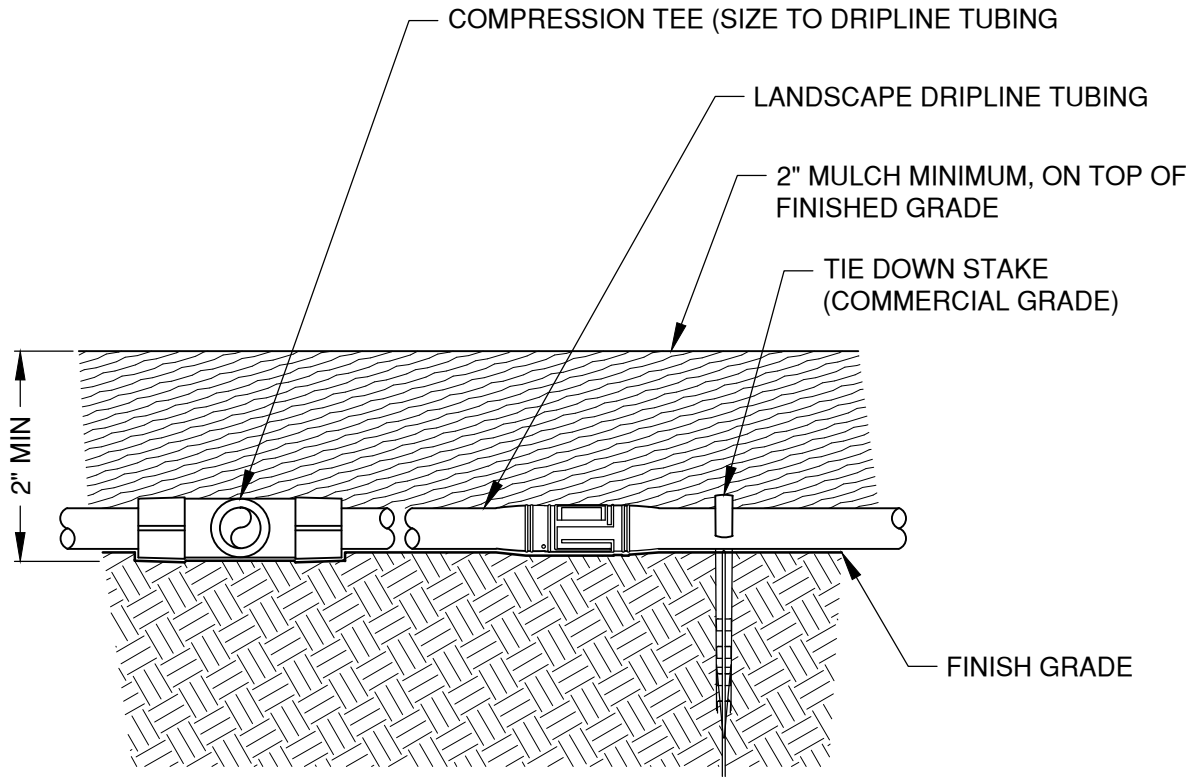

NOTES:

1. IF PUTTING LANDSCAPE DRIPLINE UNDER SOIL, DO NOT BURY MORE THAN 2" BELOW GRADE AND INCLUDE AIR RELIEF VALVE (SEE DRW NO L-13 "AIR RELIEF VALVE KIT-AR VALVE KIT")

DRAWN LJC	CITY OF BEND	CITY OF BEND	SCALE NTS
DIV LNDSCP		STANDARD DRAWING	DATE 12/1/17
REV / DATE		710 NW WALL ST., BEND, OREGON 97701	APPR
		DRIPLINE 2" BELOW GRADE POTABLE SYSTEM	STD DWG L-19

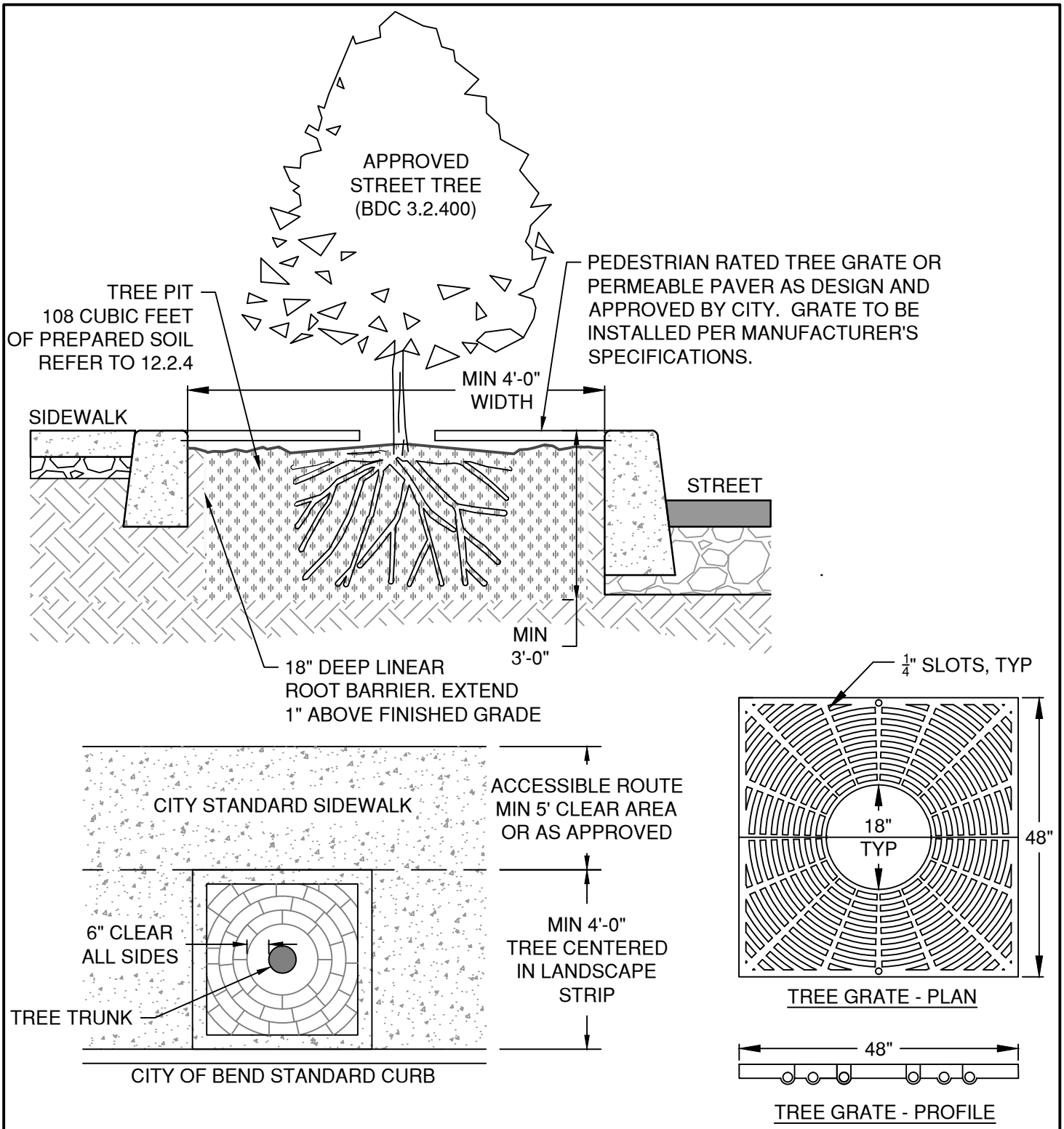

NOTES:

1. MINIMUM TREE WELL DIMENSIONS DICTATED BY BEND DEVELOPMENT CODE 12.2.4.1.
2. VEGETATION WITHIN THE TREE WELL SHALL HAVE DRIP SYSTEM IRRIGATION INSTALLED PER L-15.
3. TREE GRATE SHALL BE EJ 8954 PLAZA SET, OR APPROVED EQUAL.

DRAWN LJC	CITY OF BEND	CITY OF BEND STANDARD DRAWING 710 NW WALL ST., BEND, OREGON 97701	SCALE NTS
DIV LNDSCP			DATE 3/31/19
REV / DATE			APPR
		TREE WELL DETAIL	STD DWG L-20

PART VII

APPENDICES

PART VII – APPENDIX A

Example Tier III Right of Way Plan Set

[PROJECT NAME]

[MONTH, YEAR]

[CITY PROJECT OR FILE NUMBER]

CITY OF BEND, DESCHUTES COUNTY, OREGON

CITY OF BEND

VICINITY MAP

N

VICINITY MAP

SCALE:

SITE PLAN (AREA CAN BE RESIZED TO FIT PROJECT)

N

SITE PLAN

SCALE:

OWNER:

[NAME]

[ADDRESS]
[CITY, STATE & ZIP]
[PHONE NUMBER]

SCHEDULE OF IMPROVEMENTS:

CITY OF BEND:

LF FULL STREET IMPROVEMENT
LF SIDEWALK
LF #" CURB
CURB RAMPS
STREET LIGHTS
LF #" PVC-3034 SEWER MAIN
MANHOLES
#-4" SEWER SERVICES
STORM CATCH BASINS
DRYWELLS
LF #" STORM PIPE
LF #" DI WATER MAIN
LF #" DI WATER MAIN
FIRE HYDRANTS
#- #" WATER SERVICES

PRIVATE:

LF #" DI WATER MAIN
LF #" DI WATER MAIN
FIRE HYDRANTS
#- #" WATER SERVICES

LEGEND:

BENCHMARK (FOUND)
BENCHMARK (SET)
CATCH BASIN
CLEANOUT
CONCRETE
CONIFEROUS TREE
CONTROL MON
CULVERT
DECIDUOUS TREE
DITCH INLET
DRYWELL
GAS METER
GAS VALVE
GRAVEL
GUY WIRE
HANDICAP
MAILBOX
MONUMENT (FOUND)
MONUMENT (SET)
RAILROAD CROSSING ARM
SANITARY MANHOLE
SIGN
STORM MANHOLE
TELEPHONE RISER
TELEPHONE MANHOLE
TRAFFIC SIGNAL CONTROL BOX
TRAFFIC SIGNAL W/ MAST ARM
UTILITY POLE
UTILITY POLE/LIGHT
UTILITY VAULT W/ MANHOLE
WATER AIR RELEASE VALVE
WATER BELL JOINT
WATER BLIND FLANGE
WATER BLOW OFF VALVE
WATER BUTTERFLY VALVE
WATER CHECK VALVE
WATER COMBINATION AIR RELEASE VALVE
WATER DOUBLE DETECTOR CHECK VALVE
WATER FIRE DEPT CONNECTION
WATER FIRE HYDRANT
WATER FLANGED GATE VALVE
WATER FLANGED BY MECHANICAL JOINT GATE VALVE
WATER GATE VALVE
WATER MECHANICAL JOINT
WATER METER
WATER PRESSURE REDUCING VALVE
WATER PRESSURE REGULATOR/SUSTAINING
WATER PRESSURE RELIEF VALVE
WATER RESTRAINED MECHANICAL JOINT
WATER SAMPLE STATION
WATER SINGLE DETECTOR CHECK VALVE
WATER THRUST BLOCK (STRADDLE)
WATER THRUST BLOCK

BANK (BOTTOM)
BANK (TOP
CABLE TV
CANAL
CENTERLINE
DITCH (CENTER)
EDGE OF CONCRETE
EDGE OF GRAVEL
EDGE OF PAVEMENT
EASEMENT
FENCE (OTHER)
FENCE (SILT)
FENCE (STEEL)
FENCE (WOOD)
FIBER OPTICS
FORCE MAIN
GAS
GRADE BREAK
GUARDRAIL
IRRIGATION
JERSEY BARRIER
PAVEMENT REPAIR
PROPERTY BOUNDARY
PROPERTY SETBACKS
POWER
POWER (OVERHEAD)
RAILROAD
RIVER
SANITARY SEWER
STORM DRAIN
TELEPHONE
WATER

FADED BACK FEATURES ARE EXISTING (EXCEPT FOR FOUND MONUMENTS)

[ON COVER SHEET IF APPLICABLE]

APPROVALS:

CITY OF BEND ENGINEER:_____

NOTE: SIGNATURE DOES NOT GRANT APPROVAL TO COMMENCE CONSTRUCTION.

BEND FIRE DEPARTMENT:_____

[REQUIRED UTILITY:_____]

[REQUIRED UTILITY:_____]

[REQUIRED UTILITY:_____]

[REQUIRED UTILITY:_____]

PERMANENT BENCH MARKS USED:

IDENTIFICATION	DESCRIPTION

SHEET INDEX:

SHEET 1 COVER SHEET
SHEET 2 CONTRUCTION NOTES
SHEET 3 EXISTING CONDITIONS
SHEET 4 EROSION CONTROL
SHEET 5 SITE PLAN & PROFILE
SHEET 6 GRADING PLAN & PROFILE
SHEET 7 DETAILS

STAMP]
[ENGINEERS

[PROJECT NAME]
[PROJECT NAME 2ND LINE]
COVER
DESCHUTES COUNTY, OREGON

CITY OF BEND

REVISIONS:
1.
2.
3.

[COMPANY NAME]
[COMPANY ADDRESS]

DESIGNED BY:
DRAWN BY:
SCALE:
FILE:
DATE: / /

VERIFY SCALES
0 1"
BAR EQUALS ONE INCH ON ORIGINAL DRAWING

SHEET:
1/7

COB #

GENERAL NOTES:

1. NO CONSTRUCTION SHALL BE STARTED WITHOUT A NOTICE TO PROCEED BY THE CITY ENGINEERING DEPARTMENT. THE CITY ENGINEERING DEPARTMENT AND THE DESIGN ENGINEER SHALL BE NOTIFIED AT LEAST 24 HOURS PRIOR TO THE START OF CONSTRUCTION. ANY CONSTRUCTION WORK DONE PRIOR TO NOTICE TO PROCEED BEING ISSUED OR WITHOUT INSPECTION WILL BE REJECTED.
2. CONTRACTOR SHALL VERIFY ALL CONDITIONS ON THE JOB SITE INCLUDING BUT NOT LIMITED TO, ALL DIMENSIONS, GRADES, ELEVATIONS, EXTENT AND COMPATIBILITY TO THE EXISTING SITE CONDITIONS, AND WITH THE WORK DESCRIBED ON THE ENGINEER'S DRAWINGS. ANY DISCREPANCIES OR UNEXPECTED CONDITIONS THAT AFFECT OR CHANGE THE WORK DESCRIBED IN THE CONTRACT DOCUMENTS SHALL BE BROUGHT TO THE ENGINEER'S ATTENTION IMMEDIATELY. CONTRACTOR SHALL NOT PROCEED WITH ANY OF THE WORK IN THE AREA OF DISCREPANCIES UNTIL ALL SUCH DISCREPANCIES ARE RESOLVED. IF THE CONTRACTOR CHOOSES TO DO SO, THEN IT IS UNDERSTOOD THAT THE CONTRACTOR IS CHOOSING TO PROCEED AT THE CONTRACTOR'S OWN RISK AND SHALL INCUR ALL COSTS, IF ANY TO RESOLVE THE ISSUES TO THE SATISFACTION OF THE ENGINEER.
3. A CITY INSPECTOR ACTING ON BEHALF OF THE CITY MAY REQUIRE REVISIONS IN PLANS TO SOLVE UNFORESEEN PROBLEMS THAT MAY ARISE IN THE FIELD.
4. ALL CONSTRUCTION WORK AND INSTALLATIONS SHALL CONFORM TO THE CITY STANDARDS AND SPECIFICATIONS, AND ALL WORK SHALL BE SUBJECT TO THE APPROVAL OF THE CITY.
5. IT SHALL BE THE RESPONSIBILITY OF THE CONTRACTOR TO CONTACT "UNDERGROUND LOCATE SERVICE" AT 1-800-332-2344 AT LEAST 48 BUSINESS-DAY HOURS PRIOR TO THE START OF CONSTRUCTION FOR THE LOCATION OF POWER, GAS, CABLE TV AND TELEPHONE UNDERGROUND FACILITIES. THE CONTRACTOR WILL ALSO BE RESPONSIBLE FOR CONTACTING THE APPROPRIATE PUBLIC AGENCY FOR THE LOCATION OF UNDERGROUND FACILITIES.
6. ALL UTILITIES SHOWN ARE ACCURATE TO THE EXTENT OF AVAILABLE RECORDS AND KNOWLEDGE. NO POTHOLING TO VERIFY LOCATIONS AND ELEVATIONS WAS AUTHORIZED BY THE OWNER. THE CONTRACTOR HAS THE TOTAL RESPONSIBILITY TO VERIFY THE LOCATION OF EXISTING UNDERGROUND UTILITIES AND TO NOTIFY THE UTILITY COMPANIES WHEN WORKING IN THEIR PROXIMITY. CONTRACTOR TO VERIFY LOCATION OF EXISTING UTILITIES PRIOR TO CONSTRUCTION. OREGON LAW REQUIRES YOU TO FOLLOW RULES ADOPTED BY THE OREGON UTILITY NOTIFICATION CENTER. THOSE RULES ARE SET FORTH IN OAR 952-001-0010 THROUGH 952-001-0090. YOU MAY OBTAIN COPIES OF THE RULES BY CALLING THE CENTER. THE TELEPHONE NUMBER FOR THE OREGON UTILITY NOTIFICATION CENTER IS (503)232-2987.
7. ALL GRADING SHALL BE IN CONFORMANCE WITH THE CURRENT CITY STANDARDS AND SPECIFICATIONS AND CURRENT GRADING ORDINANCE. ALL SUBGRADE MATERIAL SHALL BE CONSIDERED CLASS A AND COMPACTED TO 95% OF OPTIMUM DENSITY. AS SPECIFIED IN THESE PLANS, ALL FILL MATERIAL SHALL BE COMPACTED TO 95% RELATIVE COMPACTION PER THE CITY TESTING REQUIREMENTS.
8. ALL FINAL CUT AND FILL SLOPES SHALL NOT EXCEED A GRADE OF 2 HORIZONTAL TO 1 VERTICAL UNLESS OTHERWISE APPROVED.
9. ALL UNSUITABLE SOILS MATERIALS, RUBBISH AND DEBRIS RESULTING FROM GRADING OPERATIONS SHALL BE REMOVED FROM THE JOB SITE AND DISPOSED OF PROPERLY.
10. THE CONTRACTOR SHALL EMPLOY ALL LABOR, EQUIPMENT, AND METHODS REQUIRED TO PREVENT DUST IN AMOUNTS DAMAGING TO PROPERTY, CULTIVATED VEGETATION AND DOMESTIC ANIMALS OR CAUSING A NUISANCE TO PERSONS OCCUPYING BUILDINGS IN THE VICINITY OF THE JOB SITE. THE CONTRACTOR SHALL BE RESPONSIBLE FOR ANY DAMAGE CAUSED BY DUST RESULTING FROM CONSTRUCTION.
11. THE CONTRACTOR SHALL FOLLOW ALL APPLICABLE INDUSTRIAL SAFETY REGULATIONS. THE CITY AND DESCHUTES COUNTY AND THEIR OFFICIALS, THE ENGINEER, AND THE OWNER SHALL NOT BE RESPONSIBLE FOR ENFORCING SAFETY REGULATIONS.
12. MATERIAL QUANTITIES USED, NOTED, OR PROVIDED IN A SEPARATE ITEMIZED QUANTITY TAKE-OFF ARE AN ENGINEER'S OPINION OF PROBABLE MATERIAL REQUIREMENTS, AND IS AN ESTIMATE ONLY. CONTRACTORS HAVE THE SOLE RESPONSIBILITY OF MAKING THEIR OWN QUANTITY TAKE-OFF AND COST ESTIMATE.
13. ALL WORK IN THE PUBLIC RIGHT OF WAY SHALL BE PERFORMED BY A CITY APPROVED CONTRACTOR (INCLUDING SUBCONTRACTORS).
14. UTILITIES SHALL HAVE THE RIGHT TO INSTALL, MAINTAIN, AND OPERATE THEIR EQUIPMENT ABOVE AND BELOW GROUND AND ALL OTHER RELATED FACILITIES WITHIN THE PUBLIC UTILITY EASEMENTS (PUE) IDENTIFIED ON THIS PLAT MAP AS MAY BE NECESSARY OR DESIRABLE IN SERVING THE LOTS IDENTIFIED HEREIN, INCLUDING THE RIGHT OF ACCESS TO SUCH FACILITIES AND THE RIGHT TO REQUIRE THE REMOVAL OF ANY OBSTRUCTIONS INCLUDING TREES AND VEGETATION THAT MAY BE PLACED WITH IN THE PUE AT THE LOT OWNERS EXPENSE. AT NO TIME MAY ANY PERMANENT STRUCTURES BE PLACED WITHIN THE PUE OR ANY OTHER OBSTRUCTION WHICH INTERFERES WITH THE USE OF THE PUE WITHOUT PRIOR WRITTEN APPROVAL OF THE UTILITIES AND FACILITIES IN THE PUE.
15. CITY ENGINEER'S SIGNATURE DOES NOT CONSTITUTE APPROVAL OF FACILITIES PROPOSED ON PRIVATE PROPERTY. SEPARATE PERMITS ISSUED BY THE BUILDING DEPARTMENT ARE REQUIRED AND SHALL BE OBTAINED BY THE DEVELOPER FOR FACILITIES LOCATED OUTSIDE OF THE PUBLIC RIGHT-OF-WAY.
16. ANY WORK WITHIN EXISTING PUBLIC RIGHT-OF-WAY OR DEDICATED CITY EASEMENTS REQUIRES A SEPARATE RIGHT-OF-WAY EXCAVATION PERMIT OBTAINED FROM THE CITY ENGINEERING DIVISION.
17. ALL WATER MAIN CONNECTION TO BE DESIGNED AND CONSTRUCTED WITH CROSS CONNECTION PROTECTION.
18. CONTRACTOR SHALL OBTAIN HYDRANT METER PERMIT FOR USE OF TESTING WATER MAIN. A MINIMUM OF 48 HOURS ADVANCED NOTICE IS REQUIRED TO THE CITY OF BEND UTILITIES DEPARTMENT.
19. ALL RESTORATION TO BE COMPLETED AS SOON AS POSSIBLE UPON COMPLETION AND APPROVAL FROM THE INSPECTOR FOR ON-SITE WORK AND UNDERGROUND WORK.
20. ALL RESTORATION SHALL COMPLY WITH CITY OF BEND STANDARDS AND SPECIFICATIONS AND FOLLOW THE BMP PAVING GUIDELINES ESTABLISHED BY STREET DEPARTMENT.
21. PRIOR TO IMPLEMENTING ANY TRAFFIC CONTROL PLANS, NOTIFICATION AND APPROVAL IS REQUIRED BY THE CITY OF BEND PRIVATE DEVELOPMENT ENGINEERING DEPARTMENT.
22. THESE PLANS WILL EXPIRE ONE YEAR FROM THE "CITY OF BEND ENGINEER" SIGNATURE DATE ON THE COVER.
23. PRIVATE INSPECTIONS WILL BE REQUIRED PER PART V OF THE CITY OF BEND STANDARDS AND SPECIFICATIONS UNLESS SPECIFIED OTHERWISE.

TRAFFIC CONTROL NOTES:

1. THE CONTRACTOR IS RESPONSIBLE FOR IMPLEMENTING THE APPROVED TRAFFIC CONTROL PLAN (TCP) TO PROVIDE SAFE AND EFFICIENT VEHICULAR, BICYCLE AND PEDESTRIAN MOVEMENT IN AND AROUND THE WORK ZONES. CERTIFIED TRAFFIC CONTROL FLAGGERS AND PROFESSIONALS MAY BE REQUIRED PER THE CONDITIONS OF THE PERMIT. THE CITY OF BEND RESERVES THE RIGHT TO MODIFY THE TCP AT ANY TIME BASED ON FIELD CONDITIONS.
2. THE CONTRACTOR SHALL COMPLY WITH ALL PERMIT REQUIREMENTS INCLUDING THE MANUAL OF UNIFORM TRAFFIC CONTROL DEVICES (MUTCD) AND THE OREGON TEMPORARY TRAFFIC CONTROL HANDBOOK FOR OPERATIONS OF THREE DAYS OR LESS, DATED DECEMBER 2011 AND PREPARED BY ODOT (ORANGE BOOK).
3. UNLESS APPROVED BY THE CITY ENGINEER, ARTERIAL ROADS SHALL HAVE NO LANE RESTRICTIONS FROM 6:30 TO 9:00 AM AND FROM 3:30 TO 6:30 PM. COLLECTORS AND LOCAL NEIGHBORHOOD MAIN ROUTES SHALL HAVE NO LANE RESTRICTIONS FROM 7:00 AM TO 8:30 AM AND FROM 4:00 PM TO 6:00 PM.
4. TCP SHALL BE SUBMITTED TO THE CITY OF BEND A MINIMUM OF 14 DAYS PRIOR TO IMPLEMENTATION FOR REVIEW. 48 HOURS PRIOR TO IMPLANTATION THE CITY OF BEND SHALL BE NOTIFIED IN ORDER TO PROVIDE ADEQUATE PUBLIC NOTIFICATION.

UTILITIES NOTES:

1. UTILITIES CROSSING SHALL BE PERPENDICULAR (90 DEGREES) TO THE CITY WATER, STORM, AND SEWER LINES.
2. UTILITY CROSSINGS SHALL MAINTAIN A MINIMUM VERTICAL SEPARATION OF 12 INCHES FROM ALL WATER AND SEWER MAIN LINES.
3. ANY UTILITY THAT IS LOCATED PARALLEL TO A CITY WATER OR SEWER MAIN LINE SHALL MAINTAIN A MINIMUM OF 10-FT OF HORIZONTAL SEPARATION.
4. THE CITY REQUIRES VISUAL INSPECTION (POT HOLING) OF ALL UTILITY CROSSINGS OF CITY WATER, STORM, AND SEWER LINES. SEWER LINES MAY BE INSPECTED BY CLOSED CIRCUIT CAMERA AT THE APPROVAL OF THE CITY ENGINEER.
5. EXCAVATION AND DIRECTIONAL DRILLING REQUIRES POT HOLING PRIOR TO ANY WORK BEING CONDUCTED AND DURING DRILLING
6. DIRECTIONAL DRILLING REQUIRES ADVANCED PROFILING OF THE CROSSING BEFORE WORK CAN BE PERMITTED.
7. NO EXCAVATION IS PERMITTED WITHIN 10 FT BEHIND A FORCE MAINS, PRESSURE MAINS, FIRE HYDRANT OR WATER MAINS THRUST BLOCK.
8. UTILITY CROSSINGS SHALL MAINTAIN 2 FT CLEARANCE HORIZONTALLY FROM CITY UTILITIES SUCH AS MANHOLES, VALVE CANS, INLETS, CATCH BASINS, ETC.
9. UTILITY LINES SHALL NOT BE PLACED IN THE ROOT AREAS OF TREES AND SHALL MAINTAIN 5 FT CLEARANCE FROM THE DRIPLINE OF TREES OR AS DIRECTED BY THE CITY ENGINEER. ANY TREES DAMAGED ARE TO BE REPLACED
10. COMPACTION IS REQUIRED AND TESTING PER SECTION 00405.46 (C) OR AT THE DISCRETION OF THE CITY ENGINEER. ALL LIFTS MUST BE MECHANICALLY COMPACTED WITH ADEQUATE COMPACTION EQUIPMENT, WITH A MINIMUM OF 5 PASSES FOR EACH LIFT OR AS DIRECTED BY THE CITY.

STREET NOTES:

1. IF ANY WORK (NEW CONSTRUCTION OR RECONSTRUCTION) IMPACTS A CURB WHERE THERE IS A PEDESTRIAN WALKWAY (E.G. A SIDEWALK OR TRAIL/PATH) INTERSECTING A ROADWAY THEN A NEW RAMP OR REPLACEMENT OF AN EXISTING NON-COMPLIANT CURB RAMP MUST BE CONSTRUCTED.
2. IF ANY NEW WORK INCLUDES RESURFACING THROUGH A STREET LEVEL PEDESTRIAN WALKWAY (E.G. MARKED OR UNMARKED CROSSWALK), EVEN IF THE WORK IS NOT THE FULL WIDTH OF THE ROADWAY, CURB RAMPS MUST BE BUILT OR RECONSTRUCTED ON BOTH ENDS OF THE CROSSWALK.
3. IF ANY NEW SIDEWALK WORK CONNECTING TO AN EXISTING NON-COMPLIANT RAMP THAT REQUIRES ANY MODIFICATION TO ANY PORTION OF THE RAMP TO MEET CURRENT SIDEWALK DESIGN STANDARDS, THEN THE ENTIRE RAMP SHALL BE RECONSTRUCTED TO CURRENT STANDARDS.
4. IF ANY UTILITY TRENCH WORK IMPACTS A CURB AT A CROSS WALK, WITH OR WITHOUT A RAMP, THE REPLACEMENT OF AN EXISTING NON-COMPLIANT CURB RAMP MUST BE CONSTRUCTED.
5. IF UTILITY TRENCH WORK DOES NOT IMPACT A CURB RAMP BUT IS "LIMITED TO A PORTION OF THE PAVEMENT, INCLUDING A PORTION OF THE CROSS WALK" REPLACEMENT OF AN EXISTING NON-COMPLIANT CURB RAMP MAY NOT BE REQUIRED (DEPENDENT ON OVERALL PROJECT SCOPE AND REQUIRED PAVEMENT RESTORATION LIMITS).
6. ANY WORK WITHIN THE PUBLIC RIGHT-OF-WAY THAT DISTURBS A PEDESTRIAN SIDEWALK OR TRAIL REQUIRES THE REPLACEMENT OF THAT FACILITY TO CURRENT CITY AND PROWAG STANDARDS. THIS INCLUDES BUT IS NOT LIMITED TO ALL ADA RAMPS, CONCRETE SIDEWALKS, ASPHALT TRAILS, DRIVEPADS, CROSSWALKS, AND SIGNAGE.
7. IF ANY ADA RAMPS ARE IDENTIFIED TO BE CONSTRUCTED, THE CONTRACTOR SHALL CONSTRUCT PERPENDICULAR RAMPS PER CITY STANDARDS. DIAGONAL OR PARALLEL RAMPS SHALL ONLY BE USED IF THERE ARE UNIQUE SITE CONSTRAINTS THAT PROHIBIT CONSTRUCTION OF PERPENDICULAR RAMPS. ALL VARIATIONS FROM PERPENDICULAR RAMPS ARE AT THE DISCRETION OF THE CITY ENGINEER.
8. THE CITY PREFERS THAT VACTOR EXCAVATION AND ASPHALT CORE SAW BE USED TO POTHOLE UTILITIES. ALTERNATE METHODS MAY BE ALLOWED, BUT REQUIRE APPROVAL AS A CONDITION OF THE PERMIT.
9. ASPHALT RESTORATION LIMITS WILL BE DETERMINED AFTER PERMIT SCOPE IS COMPLETED.

CONSTRUCTION, INSPECTION, AND NOTIFICATION NOTES:

1. PERMITTEE SHALL REQUEST INSPECTIONS A MINIMUM OF 24 HOURS IN ADVANCE.
2. THE PERMITTEE SHALL REQUEST FINAL INSPECTION 48 HOURS AFTER THE WORK IS COMPLETE.
3. THE CITY CAN INSPECT ANY PORTION OF THE PROJECT AT ANY TIME. THE INSPECTION SHALL BE PERFORMED BY CITY INSPECTORS AND MAY REQUIRE INSPECTION BY THE ENGINEER OF RECORD (THIRD PARTY INSPECTORS). PRIOR TO CONSTRUCTION, A PRE-CONSTRUCTION MEETING MAY BE REQUIRED. THE PERMITTEE/CONTRACTOR IS REQUIRED TO CALL IN ALL INSPECTIONS PER THE REQUIREMENTS OF THE PERMIT
4. CONTRACTOR SHALL PROVIDE THE CITY A MINIMUM OF 48 HRS NOTICE PRIOR TO ANY TRAFFIC CONTROL BEING IMPLEMENTED. NOTICE TO THE CITY AND THE INSPECTOR BY EMAIL IS PREFERRED (COMDEVENG@BENDOREGON.GOV)
5. INSPECTIONS ARE REQUIRED FOR CITY UTILITY CROSSINGS AND FINAL STREET RESTORATION.
6. OUTSTANDING AND INCOMPLETE PERMITS MAY CONSTITUENT RESTRICTED PERMITTING TO THE APPLICANT AND CONTRACTOR(S).
7. THE PERMITTEE AND CONTRACTOR ARE RESPONSIBLE FOR ANY DAMAGE TO PUBLIC AND PRIVATE PROPERTY. ALL DAMAGE SHALL BE REPAIRED TO PRE-CONSTRUCTION CONDITIONS AND TO THE SATISFACTION OF THE PROPERTY OWNER.

GRADING AND ESC NOTES:

1. THE ENGINEER OF RECORD CAN PROVIDE ADDITIONAL BEST MANAGEMENT PRACTICES (BMP) FROM SECTION 9.4.3 IN THE CENTRAL OREGON STORMWATER MANUAL (COSM) THAT APPLY TO THE PROJECT.
2. HOLD A PRE-CONSTRUCTION MEETING THAT INCLUDES THE CITY OF BEND INSPECTOR, EOR AND CONTRACTOR TO DISCUSS EROSION AND SEDIMENT CONTROL MEASURES AND CONSTRUCTION LIMITS.
3. THE EROSION AND SEDIMENT CONTROL (ESC) PLAN MUST BE KEPT ONSITE AT ALL TIMES WHEN WORK IS OCCURRING.
4. THE ESC MEASURES SHOWN ON THIS PLAN ARE MINIMUM REQUIREMENTS FOR ANTICIPATED SITE CONDITIONS. DURING THE CONSTRUCTIONS PERIOD, THE MEASURES MUST BE UPGRADED AS NEEDED TO COMPLY WITH ALL APPLICABLE LOCAL, STATE, AND FEDERAL EROSION AND SEDIMENT CONTROL REGULATIONS.
5. THE FOLLOWING CONSTRUCTION SEQUENCE SHALL BE FOLLOWED IN ORDER TO BEST MINIMIZE THE POTENTIAL FOR EROSION AND SEDIMENTATION CONTROL PROBLEMS:
   a. FENCE OR FLAG AREAS TO BE PROTECTED OR LEFT UNDISTURBED DURING CONSTRUCTION
   b. INSTALL GRAVELED OR PAVED CONSTRUCTION ENTRANCES, EXITS, AND PARKING AREAS TO REDUCE THE TRACKING OF SEDIMENT ONTO PUBLIC AND PRIVATE ROADS
   c. CLEAR AND GRUB SUFFICIENTLY FOR INSTALLATION OF TEMPORARY ESC BMPS
   d. INSTALL TEMPORARY ESC BMPS, CONSTRUCTING SEDIMENT TRAPPING BMPS AS ONE OF THE FIRST STEPS PRIOR TO GRADING
   e. CLEAR, GRUB AND GRADE INDIVIDUAL AND ROUGH GRADE FOR ROADS AND UTILITY LOCATIONS
   f. CLEAR, GRUB AND GRADE INDIVIDUAL LOTS OR GROUPS OF LOTS
   g. TEMPORARILY STABILIZE A LOT OR GROUPS OF LOTS, THROUGH RE-VEGETATION OR OTHER APPROPRIATE BMPS, WHERE SUBSTANTIAL CUT OR FILL SLOPES ARE RESULT OF SITE GRADING
   h. CONSTRUCT ROADS, BUILDINGS, PERMANENT STROMWATER FACILITIES (I.E. INLETS, PONDS, UIC FACILITIES, ETC.)
   i. PROTECT ALL PERMANENT STORMWATER FACILITIES UTILIZING THE APPROPRIATE BMPS
   j. REMOVE TEMPORARY ESC CONTROLS WHEN PERMANENT STORMWATER FACILITIES HAVE BEEN INSTALLED, ALL LAND-DISTURBING ACTIVITIES HAVE CEASED, AND VEGETATION HAS BEEN ESTABLISHED IN THE AREAS NOTED ON THE ACCEPTED ESC PLAN(S)
6. RETAIN THE DUFF LAYER, NATIVE TOPSOIL, AND NATURAL VEGETATION IN AN UNDISTURBED STATE TO THE MAXIMUM EXTENT AND DURATION PRACTICAL.
7. INSPECT ALL ROADWAYS ADJACENT TO THE CONSTRUCTION ACCESS ROUTE AT THE END OF EACH DAY. SIGNIFICANT AMOUNTS OF SEDIMENT THAT LEAVES THE CONSTRUCTION SITE MUST BE CLEANED UP WITHIN 24 HOURS. VACUUMING OR DRY SWEEPING MUST BE USED TO CLEAN UP RELEASED SEDIMENT AND SEDIMENT MUST NOT BE INTENTIONALLY WASHED INTO STORM SEWERS, DRAINAGE WAYS, OR WATER BODIES.
8. COVER AND SECURE ALL DUMP TRUCK LOADS LEAVING THE CONSTRUCTION SITE TO MINIMIZE SPILLAGE ON ROADS.
9. RESTORE CONSTRUCTION ACCESS ROUTE EQUAL TO OR BETTER THAN THE PRE-CONSTRUCTION CONDITION. CONTROL FUGITIVE DUST FROM CONSTRUCTION ACTIVITY.
10. STABILIZE EXPOSED UNWORKED SOILS (INCLUDING STOCKPILES), WHETHER AT FINAL GRADE OR NOT, WITHIN 10 CALENDAR DAYS DURING THE REGIONAL DRY SEASON (JULY 1 THROUGH SEPTEMBER 30) AND WITHIN 5 CALENDAR DAYS DURING THE REGIONAL WET SEASON (OCTOBER 1 THROUGH JUNE 30).
11. PROTECT INLETS, DRYWELLS, CATCH BASINS AND OTHER STORMWATER MANAGEMENT FACILITIES FROM SEDIMENT, WHETHER OR NOT FACILITIES ARE OPERABLE.
12. KEEP ROADS ADJACENT TO INLETS CLEAN.
13. INSPECT INLETS WEEKLY AT A MINIMUM AND DAILY DURING STORM EVENTS. CLEAN OR REMOVE AND REPLACE INLET PROTECTION DEVICES BEFORE SIX INCHES OF SEDIMENT CAN ACCUMULATE.
14. INSTALL SEDIMENT CONTROLS ALONG THE SITE PERIMETER ON ALL DOWN GRADIENT SIDES OF THE CONSTRUCTION SITE BEFORE COMMENCING EARTH DISTURBING ACTIVITIES.
15. WHENEVER POSSIBLE, CONSTRUCT STORMWATER CONTROL FACILITIES (DETENTION/RETENTION STORAGE POND OR SWALES) BEFORE GRADING BEGINS. THESE FACILITIES SHOULD BE OPERATIONAL BEFORE THE CONSTRUCTION OR IMPERVIOUS SITE IMPROVEMENTS.
16. STOCKPILE MATERIALS (SUCH AS TOPSOIL) ONSITE MUST BE KEPT OFF OF ROADWAY AND SIDEWALKS.
17. COVER, CONTAIN AND PROTECT ALL CHEMICALS, LIQUID PRODUCTS, PETROLEUM PRODUCT, AND NON-INERT WASTES PRESENT ONSITE FROM VANDALISM. MAINTAIN A SUPPLY OF MATERIALS ON HAND TO ADDRESS AND CONTAIN SPILLS.
18. LOCATE DESIGNATED VEHICLE AND EQUIPMENT SERVICE AREAS, FUEL, AND MATERIALS AWAY FROM DRAINAGE INLETS, WATER COURSES, AND CANALS. PROPERLY CONTAIN AREAS USING BERMS, SAND BAGS, OR OTHER BARRIERS.
19. REGULARLY INSPECT AND MAINTAIN EQUIPMENT, ESPECIALLY FOR DAMAGED HOSES AND LEAKY GASKETS. CONDUCT MAINTENANCE AND REPAIR OF HEAVY EQUIPMENT AND VEHICLES (I.E. OIL CHANGES, FUEL TANK DRAIN DOWN, ETC) THAT MAY RESULT IN DISCHARGE OR SPILLAGE OF POLLUTANTS USING SPILL PREVENTION MEASURES, SUCH AS DRIP PANS. CLEAN ALL CONTAMINATED SURFACES IMMEDIATELY FOLLOWING ANY DISCHARGE OR SPILL INCIDENT, PERFORM REPAIRS ONSITE USING TEMPORARY PLASTIC OR OIL ABSORBING BLANKETS BENEATH THE VEHICLE.
20. DESIGNATE AN AREA FOR CLEANING PAINTING EQUIPMENT AND TOOLS. NEVER CLEAN BRUSHES OR RINSE CONTAINERS INTO THE STREET, GUTTER, DRAINAGE INLET, OR WATERWAY.
21. APPLY LANDSCAPING OR AGRICULTURAL CHEMICALS, INCLUDING FERTILIZERS AND PESTICIDES, IN SUCH A MANNER, AND AT APPLICATIONS RATES, THAT INHIBITS THE LOSS OF CHEMICALS INTO STORMWATER RUNOFF FACILITIES.
22. INSPECT ON A REGULAR BASIS (AT A MINIMUM WEEKLY, AND DAILY DURING/AFTER A RUNOFF PRODUCING STORM EVENT) AND MAINTAIN ALL EROSION AND SEDIMENT CONTROL BMPS TO ENSURE SUCCESSFUL PERFORMANCE OF THE BMPS.
23. REMOVE TEMPORARY ESC BMPS WITHIN 30 DAYS AFTER THE TEMPORARY BMPS ARE NO LONGER NEEDED. PERMANENTLY STABILIZE AREAS THAT ARE DISTURBED DURING THE REMOVAL PROCESS.
24. KEEP SEDIMENT ON THE PROJECT SITE, TO THE MAXIMUM EXTENT PRACTICAL.
25. CONTROL FUGITIVE DUST FROM CONSTRUCTION ACTIVITY. DUST CONTROL MUST BE CONTINUOUS, PARTICULARLY DURING THE DRY SEASON.
26. DESIGNATE THE LOCATION OF A SLURRY PIT WHERE CONCRETE TRUCKS AND EQUIPMENT CAN BE WASHED OUT. SLURRY PITS ARE NOT TO BE LOCATED IN, OR UPSTREAM OF, A SWALE, DRAINAGE AREA, STORMWATER FACILITY, WATER BODY, OR IN AN AREA WHERE A STORMWATER FACILITY EXISTS OR IS PROPOSED.

STAMP]
[ENGINEERS

[PROJECT NAME]
[PROJECT NAME 2ND LINE]
CONSTRUCTION NOTES
DESCHUTES COUNTY, OREGON

CITY OF BEND

REVISIONS:
1.
2.
3.

[COMPANY NAME]
[COMPANY ADDRESS]

DESIGNED BY:
DRAWN BY:
SCALE:
FILE:
DATE: / /

VERIFY SCALES
0 1"
BAR EQUALS ONE INCH ON ORIGINAL DRAWING

SHEET:
2/7

COB #

[NORTH ARROW]

EXISTING SITE CONDITIONS PLAN

SCALE:

STAMP]
[ENGINEERS

[PROJECT NAME]
[PROJECT NAME 2ND LINE]

EXISTING CONDITIONS

DESCHUTES COUNTY, OREGON

CITY OF BEND

REVISIONS:
1.
2.
3.

[COMPANY NAME]
[COMPANY ADDRESS]

DESIGNED BY:
DRAWN BY:
SCALE:
FILE:
DATE: / /

VERIFY SCALES
0 1"
BAR EQUALS ONE INCH
ON ORIGINAL DRAWING

SHEET:
3/7

COB #

[NORTH ARROW]

COB #

SHEET: 4/7

VERIFY SCALES
0 1"
BAR EQUALS ONE INCH
ON ORIGINAL DRAWING

DESIGNED BY:
DRAWN BY:
SCALE:
FILE:
DATE: / /

[COMPANY NAME]
[COMPANY ADDRESS]

REVISIONS:
1.
2.
3.

CITY OF BEND

[PROJECT NAME]
[PROJECT NAME 2ND LINE]

EROSION CONTROL

DESCHUTES COUNTY, OREGON

STAMP]
[ENGINEERS

[NORTH ARROW]

SITE PLAN
SCALE:

CROSS SECTION

DETAIL TITLE
NOT TO SCALE (2/5)

TYPICAL SECTION

SITE PROFILE
SCALE:

DETAIL TITLE
NOT TO SCALE (2/5)

STAMP]
[ENGINEERS

[PROJECT NAME]
[PROJECT NAME 2ND LINE]

SITE PLAN & PROFILE

DESCHUTES COUNTY, OREGON

CITY OF BEND

REVISIONS:
1.
2.
3.

[COMPANY NAME]
[COMPANY ADDRESS]

DESIGNED BY:
DRAWN BY:
SCALE:
FILE:
DATE: / /

VERIFY SCALES
0 1"
BAR EQUALS ONE INCH
ON ORIGINAL DRAWING

SHEET:
5/7

COB #

[NORTH ARROW]

DRAINAGE PLAN

SCALE:

STAMP]
[ENGINEERS

[PROJECT NAME]
[PROJECT NAME 2ND LINE]

GRADING PLAN & PROFILE

DESCHUTES COUNTY, OREGON

CITY OF BEND

REVISIONS:
1.
2.
3.

[COMPANY NAME]
[COMPANY ADDRESS]

DESIGNED BY:
DRAWN BY:
SCALE:
FILE:
DATE: / /

VERIFY SCALES
0 1"
BAR EQUALS ONE INCH
ON ORIGINAL DRAWING

SHEET:
6/7

COB #

SPECIAL DETAIL

DETAIL TITLE
NOT TO SCALE (1/5)

SPECIAL DETAIL

DETAIL TITLE
NOT TO SCALE (2/5)

SPECIAL DETAIL

DETAIL TITLE
NOT TO SCALE (3/5)

SPECIAL DETAIL

DETAIL TITLE
NOT TO SCALE (4/5)

DRAWN
DIV WAT/SEW/STORM
REV | DATE | APPR

CITY OF BEND
STANDARDS AND SPECIFICATIONS
710 NW WALL ST., BEND, OREGON 97701
DETAIL TITLE

SCALE NTS
DATE 6/5/2009
APPR
DRW NO

DRAWN
DIV WAT/SEW/STORM
REV | DATE | APPR

CITY OF BEND
STANDARDS AND SPECIFICATIONS
710 NW WALL ST., BEND, OREGON 97701
DETAIL TITLE

SCALE NTS
DATE 6/5/2009
APPR
DRW NO

STAMP]
[ENGINEERS

[PROJECT NAME]
[PROJECT NAME 2ND LINE]
DETAILS
DESCHUTES COUNTY, OREGON

CITY OF BEND

REVISIONS:
1.
2.
3.

[COMPANY NAME]
[COMPANY ADDRESS]

DESIGNED BY:
DRAWN BY:
SCALE:
FILE:
DATE: / /

VERIFY SCALES
0 1"
BAR EQUALS ONE INCH
ON ORIGINAL DRAWING

SHEET:
7/7

COB #

PART VII – APPENDIX B

Example Lift Station Plan Set

(PROJECT NAME HERE)

(LIFT STATION NAME HERE)

SITE ADDRESS: (ADDRESS HERE)

DATE: (DATE HERE)

CITY PROJECT NUMBER: (IF APPLICABLE)

CITY OF BEND, DESCHUTES COUNTY, OREGON

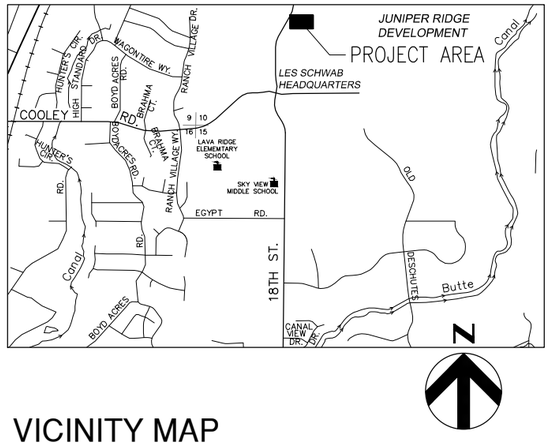

VICINITY MAP

SCALE: N.T.S.

OWNER:

CITY OF BEND

UTILITY'S DEPARTMENT
62975 BOYD ACRES ROAD
BEND, OR 97701



SITE PLAN

SCALE: N.T.S.

EXAMPLE

APPROVALS:

CITY OF BEND
ENGINEER:_____

NOTE: SIGNATURE DOES NOT GRANT APPROVAL TO COMMENCE CONSTRUCTION.

[REQUIRED UTILITY:_____]

[REQUIRED UTILITY:_____]

[REQUIRED UTILITY:_____]

[REQUIRED UTILITY:_____]

PERMANENT BENCH MARKS USED:

IDENTIFICATION	DESCRIPTION
NOT APPLICABLE	

FOR SAMPLE ONLY

RECORD DRAWINGS

REVISIONS DRAWN BY: XX DATE: XX/XX/XX

THESE RECORD DRAWINGS HAVE BEEN PREPARED, IN PART, ON THE BASIS OF INFORMATION COMPILED BY OTHERS. THEY ARE NOT INTENDED TO REPRESENT IN DETAIL THE EXACT LOCATION, TYPE OF COMPONENT NOR MANNER OF CONSTRUCTION. THE ENGINEER WILL NOT BE RESPONSIBLE FOR ANY ERRORS OR OMISSIONS WHICH HAVE BEEN INCORPORATED INTO THE RECORD DRAWINGS.

FOR SEALS AND SIGNATURES

(PROJECT NAME)
(LIFT STATION NAME)

COVER

DESCHUTES COUNTY, OREGON

REVISIONS:

(CONSULTANT ENGINEER NAME, ADDRESS & PHONE NUMBER)

DESIGNED BY:
DRAWN BY:
SCALE:
FILE:
DATE:

VERIFY SCALES
0 1"
BAR EQUALS ONE INCH ON ORIGINAL DRAWING

SHEET:

G-000

COB # (XXXXXX)

DRAWING INDEX

1	G-000	COVER
2	G-001	INDEX, SIGNATURE BLOCK, AND NOTES
3	G-002	GENERAL LEGEND AND PIPING SYMBOLS
4	G-003	PROCESS EQUIPMENT LEGEND AND PIPING SYMBOLS
5	G-004	INSTRUMENTATION LEGEND AND SYMBOLS
6	G-005	ELECTRICAL NOTES AND STANDARD SYMBOLS
7	G-006	ELECTRICAL NOTES AND STANDARD SYMBOLS
8	G-007	GENERAL STRUCTURAL NOTES
9	G-008	BASIS OF DESIGN
1	C-001	DEMOLITION AND EROSION CONTROL PLAN
11	C-002	SITE PLAN
12	C-003	GRADING AND DRAINAGE
13	C-004	GRAVITY SEWER PLAN AND PROFILE
14	C-005	FORCE MAIN SEWER PLAN AND PROFILE
15	C-006	CIVIL DETAILS
16	L-001	LANDSCAPE PLAN AND DETAILS (INCLUDE IF REQUIRED)
17	L-002	IRRIGATION PLAN AND DETAILS (INCLUDE IF REQUIRED)
18	M-101	LIFT STATION MECHANICAL PLAN
19	M-102	LIFT STATION MECHANICAL SECTION
20	M-103	MECHANICAL DETAILS
21	M-104	MECHANICAL DETAILS
22	I-001	STANDARD P&ID CONSTANT
24	I-002	TEMPLATE (50 I/Os) PANEL LAYOUT
25	I-003	(50 I/Os) BILL OF MATERIALS
26	I-004	(50 I/Os) PWR WIRING SCHEMATIC
27	I-005	(50 I/Os) PWR WIRING SCHEMATIC
28	I-006	(50 I/Os) DIGITAL INPUT MODULE 1
29	I-007	(50 I/Os) DIGITAL INPUT MODULE 2
30	I-008	(50 I/Os) ANALOG INPUT MODULE
31	I-009	INTRINSIC SAFETY RELAY PANEL (ISRP)
32	I-010	COMMUNICATION NETWORK DIAGRAM
33	E-001	ELECTRICAL SITE PLAN
34	E-002	MAIN CONTROL CABINET LAYOUT
35	E-003	ELECTRICAL ONE LINE DIAGRAM
36	E-004	CONDUIT AND WIRE SCHEDULE
37	E-005	WETWELL ISOLATION PEDESTAL
38	E-006	ELECTRICAL DETAILS
39	E-007	PUMP 1 WIRING DIAGRAM
40	E-008	PUMP 2 WIRING DIAGRAM
41	E-009	PUMP STATION FLOW LOOP SHEET
42	E-010	WETWELL LEVEL LOOP SHEET
43	E-011	STANDBY GENERATOR LOOP SHEET
44	E-012	AUTO-TRANSFER SWITCH LOOP SHEET
45	E-013	WETWELL HIGH HIGH LEVEL LOOP SHEET
46	E-014	HATCH INTRUSION LOOP SHEET
47	E-015	MAIN CONTROL CAB INSTRUSION LOOP SHEET

SECTION AND DETAIL DESIGNATION

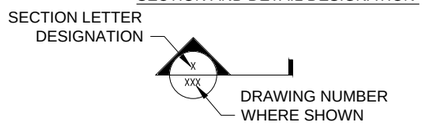

DESIGN DETAIL DESIGNATION



NOTES:
1. ALL DESIGN DETAILS ARE TYPICAL AND MUST BE USED IF DESIGN DETAIL DESIGNATION IS NOT SHOWN.
2. THE TERM STANDARD DETAIL, OR A FORM OF IT, IS SYNONYMOUS WITH DESIGN DETAIL AND REFERS TO THE DESIGN DETAILS FOUND IN THIS SET OF CONTRACT DOCUMENTS.
3. THE DESIGN DETAILS REPRESENT THE CHARACTER AND NATURE OF THE WORK REQUIRED THROUGHOUT THE PROJECT. ALL ASSOCIATED WORK SHALL BE IN ACCORDANCE WITH THE DESIGN DETAILS SHOWN WHETHER THE DETAILS ARE SPECIFICALLY REFERENCED OR NOT.

KEY NOTE DESIGNATION

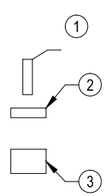

(#) KEY NOTES:
(1) NOTE.
(2) NOTE.
(3) NOTE.

CONSTRUCTION NOTES:

1. NO CONSTRUCTION SHALL BE STARTED WITHOUT A NOTICE TO PROCEED BY THE CITY ENGINEERING DEPARTMENT. THE CITY ENGINEERING DEPARTMENT AND THE DESIGN ENGINEER SHALL BE NOTIFIED AT LEAST 24 HOURS PRIOR TO THE START OF CONSTRUCTION. ANY CONSTRUCTION WORK DONE PRIOR TO NOTICE TO PROCEED BEING ISSUED OR WITHOUT INSPECTION WILL BE REJECTED.
2. CONTRACTOR SHALL VERIFY ALL CONDITIONS ON THE JOB SITE INCLUDING BUT NOT LIMITED TO, ALL DIMENSIONS, GRADES, ELEVATIONS, EXTENT AND COMPATIBILITY TO THE EXISTING SITE CONDITIONS, AND WITH THE WORK DESCRIBED ON THE ENGINEER'S DRAWINGS. ANY DISCREPANCIES OR UNEXPECTED CONDITIONS THAT AFFECT OR CHANGE THE WORK DESCRIBED IN THE CONTRACT DOCUMENTS SHALL BE BROUGHT TO THE ENGINEER'S ATTENTION IMMEDIATELY. CONTRACTOR SHALL NOT PROCEED WITH ANY OF THE WORK IN THE AREA OF DISCREPANCIES UNTIL ALL SUCH DISCREPANCIES ARE RESOLVED. IF THE CONTRACTOR CHOOSES TO DO SO, THEN IT IS UNDERSTOOD THAT THE CONTRACTOR IS CHOOSING TO PROCEED AT THE CONTRACTOR'S OWN RISK AND SHALL INCUR ALL COSTS, IF ANY TO RESOLVE THE ISSUES TO THE SATISFACTION OF THE ENGINEER.
3. A CITY INSPECTOR ACTING ON BEHALF OF THE CITY MAY REQUIRE REVISIONS IN PLANS TO SOLVE UNFORESEEN PROBLEMS THAT MAY ARISE IN THE FIELD.
4. ALL CONSTRUCTION WORK AND INSTALLATIONS SHALL CONFORM TO THE CITY STANDARDS AND SPECIFICATIONS, AND ALL WORK SHALL BE SUBJECT TO THE APPROVAL OF THE CITY.
5. IT SHALL BE THE RESPONSIBILITY OF THE CONTRACTOR TO CONTACT "UNDERGROUND LOCATE SERVICE" AT 1-800-332-2344 AT LEAST 48 BUSINESS-DAY HOURS PRIOR TO THE START OF CONSTRUCTION FOR THE LOCATION OF POWER, GAS, CABLE TV AND TELEPHONE UNDERGROUND FACILITIES. THE CONTRACTOR WILL ALSO BE RESPONSIBLE FOR CONTACTING THE APPROPRIATE PUBLIC AGENCY FOR THE LOCATION OF UNDERGROUND FACILITIES.
6. ALL UTILITIES SHOWN ARE ACCURATE TO THE EXTENT OF AVAILABLE RECORDS AND KNOWLEDGE. NO POTHOLING TO VERIFY LOCATIONS AND ELEVATIONS WAS AUTHORIZED BY THE OWNER. THE CONTRACTOR HAS THE TOTAL RESPONSIBILITY TO VERIFY THE LOCATION OF EXISTING UNDERGROUND UTILITIES AND TO NOTIFY THE UTILITY COMPANIES WHEN WORKING IN THEIR PROXIMITY. CONTRACTOR TO VERIFY LOCATION OF EXISTING UTILITIES PRIOR TO CONSTRUCTION. OREGON LAW REQUIRES YOU TO FOLLOW RULES ADOPTED BY THE OREGON UTILITY NOTIFICATION CENTER. THOSE RULES ARE SET FORTH IN OAR 952-001-0010 THROUGH 952-001-0090. YOU MAY OBTAIN COPIES OF THE RULES BY CALLING THE CENTER. THE TELEPHONE NUMBER FOR THE OREGON UTILITY NOTIFICATION CENTER IS (503)232-2987.
7. ALL GRADING SHALL BE IN CONFORMANCE WITH THE CURRENT CITY STANDARDS AND SPECIFICATIONS AND CURRENT GRADING ORDINANCE. ALL SUBGRADE MATERIAL SHALL BE CONSIDERED CLASS A AND COMPACTED TO 95% OF OPTIMUM DENSITY. AS SPECIFIED IN THESE PLANS, ALL FILL MATERIAL SHALL BE COMPACTED TO 95% RELATIVE COMPACTION PER THE CITY TESTING REQUIREMENTS.
8. ALL FINAL CUT SLOPES SHALL NOT EXCEED A GRADE OF 3 TO 1 VERTICAL UNLESS OTHERWISE APPROVED. FILL SLOPES SHALL NOT EXCEED A GRADE OF 2 HORIZONTAL TO 1 VERTICAL UNLESS OTHERWISE APPROVED BY THE ENGINEER.
9. ALL UNSUITABLE SOILS MATERIALS, RUBBISH AND DEBRIS RESULTING FROM GRADING OPERATIONS SHALL BE REMOVED FROM THE JOB SITE AND DISPOSED OF PROPERLY.
10. THE CONTRACTOR SHALL EMPLOY ALL LABOR, EQUIPMENT, AND METHODS REQUIRED TO PREVENT DUST IN AMOUNTS DAMAGING TO PROPERTY, CULTIVATED VEGETATION AND DOMESTIC ANIMALS OR CAUSING A NUISANCE TO PERSONS OCCUPYING BUILDINGS IN THE VICINITY OF THE JOB SITE. THE CONTRACTOR SHALL BE RESPONSIBLE FOR ANY DAMAGE CAUSED BY DUST RESULTING FROM CONSTRUCTION.
11. THE CONTRACTOR SHALL FOLLOW ALL APPLICABLE INDUSTRIAL SAFETY REGULATIONS. THE CITY AND DESCHUTES COUNTY AND THEIR OFFICIALS, THE ENGINEER, AND THE OWNER SHALL NOT BE RESPONSIBLE FOR ENFORCING SAFETY REGULATIONS.
12. MATERIAL QUANTITIES USED, NOTED, OR PROVIDED IN A SEPARATE ITEMIZED QUANTITY TAKE-OFF ARE AN ENGINEER'S OPINION OF PROBABLE MATERIAL REQUIREMENTS, AND IS AN ESTIMATE ONLY. CONTRACTOR'S HAVE THE SOLE RESPONSIBILITY OF MAKING THEIR OWN QUANTITY TAKE-OFF AND COST ESTIMATE.
13. ALL WORK SHALL BE PERFORMED BY A CITY APPROVED CONTRACTOR.
14. UTILITIES SHALL HAVE THE RIGHT TO INSTALL, MAINTAIN, AND OPERATE THEIR EQUIPMENT ABOVE AND BELOW GROUND AND ALL OTHER RELATED FACILITIES WITHIN THE PUBLIC UTILITY EASEMENTS (PUE) IDENTIFIED ON THIS PLAT MAP AS MAY BE NECESSARY OR DESIRABLE IN SERVING THE LOTS IDENTIFIED HEREIN, INCLUDING THE RIGHT OF ACCESS TO SUCH FACILITIES AND THE RIGHT TO REQUIRE THE REMOVAL OF ANY OBSTRUCTIONS INCLUDING TREES AND VEGETATION THAT MAY BE PLACED WITH IN THE PUE AT THE LOT OWNERS EXPENSE. AT NO TIME MAY ANY PERMANENT STRUCTURES BE PLACED WITHIN THE PUE OR ANY OTHER OBSTRUCTION WHICH INTERFERES WITH THE USE OF THE PUE WITHOUT PRIOR WRITTEN APPROVAL OF THE UTILITIES AND FACILITIES IN THE PUE.
15. CITY ENGINEER'S SIGNATURE DOES NOT CONSTITUTE APPROVAL OF FACILITIES PROPOSED ON PRIVATE PROPERTY. SEPARATE PERMITS ISSUED BY THE BUILDING DEPARTMENT ARE REQUIRED AND SHALL BE OBTAINED BY THE DEVELOPER FOR FACILITIES LOCATED OUTSIDE OF THE PUBLIC RIGHT-OF-WAY.
16. ANY WORK WITHIN EXISTING PUBLIC RIGHT-OF-WAY OR DEDICATED CITY EASEMENTS REQUIRES A SEPARATE RIGHT-OF-WAY EXCAVATION PERMIT OBTAINED FROM THE CITY ENGINEERING DIVISION.

SANITARY SEWER SYSTEM

APPROVED FOR CONSTRUCTION:

DATE

FOR SAMPLE ONLY

RECORD DRAWINGS

REVISIONS DRAWN BY: XX DATE: XX/XX/XX

THESE RECORD DRAWINGS HAVE BEEN PREPARED, IN PART, ON THE BASIS OF INFORMATION COMPILED BY OTHERS. THEY ARE NOT INTENDED TO REPRESENT IN DETAIL THE EXACT LOCATION, TYPE OF COMPONENT NOR MANNER OF CONSTRUCTION. THE ENGINEER WILL NOT BE RESPONSIBLE FOR ANY ERRORS OR OMISSIONS WHICH HAVE BEEN INCORPORATED INTO THE RECORD DRAWINGS.

EXAMPLE

FOR SEALS AND SIGNATURES

(PROJECT NAME)
GENERAL
INDEX, NOTES, AND SIGNATURE BLOCK
DESCHUTES COUNTY, OREGON

REVISIONS:

(CONSULTANT ENGINEER NAME, ADDRESS & PHONE NUMBER)

DESIGNED BY:
DRAWN BY:
SCALE:
FILE:
DATE:

VERIFY SCALES
0 1"
BAR EQUALS ONE INCH ON ORIGINAL DRAWING

SHEET: G-001

COB # (XXXXXX)

ABBREVIATIONS

@	AT
A/B	AERATION BASIN
AB	ANCHOR BOLT
ABDN	ABANDONED
ACBD	ACOUSTICAL BOARD
ACST	ACOUSTICAL TILE
AD	AREA DRAIN
ADDL	ADDITIONAL
ADJ	ADJACENT
AFF	ABOVE FINISH FLOOR
AHR	ANCHOR
AL	ALUMINUM
ALTN	ALTERNATE
APPROX	APPROXIMATE
APVD	APPROVED
ARCH.	ARCHITECTURAL
ASSY	ASSEMBLY
AVG	AVERAGE
BD	BOARD
BETW	BETWEEN
BF	BOTTOM FACE
BLDG	BUILDING
BM	BEAM
BOD	BOTTOM OF DUCT
BOT	BOTTOM
BRG	BEARING
BST	BOTTOM OF STEEL
CAB.	CABINET
CCP	CONCRETE CYLINDER PIPE
C/C	CHLORINE CONTACT
CEM PLAS	CEMENT PLASTER
CHEM	CHEMICAL
CHKD PL	CHECKERED PLATE
CFM	CUBIC FEET PER MINUTE
CI	CAST IRON
CIP	CAST IN PLACE
CJ	CONSTRUCTION JOINT
Ç OR CL	CENTER LINE
CL 2	CHLORINE
CLG	CEILING
CLR	CLEAR
CMP	CORRUGATED METAL PIPE
CMU	CONCRETE MASONARY UNITS
COB	CITY OF BEND
COL	COLUMN
CONC	CONCRETE
CONN	CONNECTION
CONST	CONSTRUCTION
CONT	CONTINUOUS
COR	CORNER
CPLG	COUPLING
CPVC	CHLORINATED POLYVINYL CHLORIDE
C TO C	CENTER TO CENTER
CTR	CENTER
CTRD	CENTERED
CU FT	CUBIC FEET
∠	CENTRAL ANGLE
DAFT	DISSOLVED AERATION FLOTATION THICKENING
DBA	DEFORMED BAR ANCHOR
DBL	DOUBLE
DET	DETAIL
DIA	DIAMETER
DIAG	DIAGONAL
DIM	DIMENSION
DIP.	DUCTILE IRON PIPE
DIR	DIRECTION
DISCH	DISCHARGE
DN	DOWN
DS	DOWN SPOUT
DWG	DRAWING
DWL	DOWEL
E	EAST
EA	EACH
ECC	ECCENTRIC
EF	EACH FACE
EFL	EFFLUENT
EL	ELEVATION
ELB	ELBOW
ELEC	ELECTRICAL
EP	EDGE OF PAVEMENT
EQL	EQUAL
EQL SP	EQUALLY SPACED
EQPT	EQUIPMENT
EW	EACH WAY
EXP JT	EXPANSION JOINT
EXT	EXTERIOR, EXTERNAL, EXTENSION
EXST	EXISTING
FA	FIRST AID KIT
FAB	FABRICATION
FFE	FINISHED FLOOR ELEVATION
FACIL	FACILITY
FCA	FLANGED COUPLING ADAPTER
FCTY	FACTORY
FD	FLOOR DRAIN
FDN	FOUNDATION
FEXT	FIRE EXTINGUISHER
FFL	FINISHED FLOOR
FLL	FLOW LINE ELEVATION
FLEX	FLEXIBLE
FLG	FLANGE
FL	FLOOR
FNSH	FINISH
FOT	FLAT ON TOP
GA	GAUGE, GAGE
GB	GRAB BAR
GAL	GALLON
GALV	GALVANIZED
GALVS	GALVANIZED STEEL
GPD	GALLONS PER DAY
GRD	GROUND
GRTG	GRATING
GVL	GRAVEL
GWB	GYPSUM WALLBOARD
GYP PLAS	GYPSUM PLASTER
H.A.S	HEADED ANCHOR STUD
HD	HUB DRAIN
HDNR	HARDNER
HDR	HEADER
HGT	HEIGHT
HM	HOLLOW METAL
HORIZ	HORIZONTAL
HPT	HIGH POINT
HR	HANDRAIL
HR	HOUR
HS	HIGH STRENGTH
I&C	INSTRUMENTATION AND CONTROL
ID	INSIDE DIAMETER
IE	INVERT ELEVATION
I.F.	INSIDE FACE
INFL	INFLUENT
INSTL	INSTALL
INSUL	INSULATION
INTR	INTERIOR
INVT	INVERT
ITG	INSULATED TEMPERED GLASS
JT	JOINT
L	LENGTH OF CURVE
LB	POUNDS
LB/D	POUNDS PER DAY
LG	LONG
LLV	LONG LEG VERTICAL
LNTL	LINTEL
LONG.	LONGITUDINAL
LPT	LOW POINT
LT	LIGHT
MATL	MATERIAL
MAX	MAXIMUM
MB	MACHINE BOLT
MCC	MOTOR CONTROL CENTER
MECH	MECHANICAL
MFR	MANUFACTURER
MGD	MILLION GALLONS PER DAY
MG/L	MILLIGRAMS PER LITRE
MH	MANHOLE
MIN	MINIMIM
MISC	MISCELLANEOUS
MLSS	MIXED LIQUOR SUSPENDED SOLIDS
MLVSS	MIXED LIQUOR VOLATILE SUSPENDED SOLIDS
MO	MASONARY OPENING
MON	MONUMENT
MTG	MOUNTING
MTL	METAL
MTR	METERING
N	NORTH
NIC	NOT IN CONTRACT
NO.	NUMBER
NOM	NOMINAL
NORM	NORMAL
NTS	NOT TO SCALE
OC	ON CENTER
OD	OUTSIDE DIAMETER, OVERFLOW DRAIN
O.F.	OUTSIDE FACE
OFE	OWNER-FURNISHED EQUIPMENT
OVHD	OVERHEAD
O TO O	OUT TO OUT
OPNG	OPENING
OPP	OPPOSITE
PC	POINT OF CURVATURE
PCV	PRESSURE CONTROL VALVE
P/C	PRIMARY CLARIFIERS
PD	PEAK DAY
PHF	PEAK HOUR FLOW
PI	POINT OF INTERSECTION
P&ID	PROCESS AND INSTRUMENTATION DIAGRAM
PJF	PREMOLDED JOINT FILLER
PL	PLATE
PLAM	PLASTIC LAMINATE
PLYWD	PLYWOOD
POC	POINT ON CURVE
POT	POINT ON TANGENT
PR	PAIR
PRV	PRESSURE REDUCING VALVE
PS	PUMP STATION
PSF	POUNDS PER SQUARE FOOT
PSI	POUNDS PER SQUARE INCH
PT	POINT OF TANGENCY
PTD	PAPER TOWEL DISPENSER
PTD/R	PAPER TOWEL DISPENSER/RECPTACLE
PTRD	PRESSURE TREATED
PVC	POINT OF VERTICAL CURVATURE
PVC	POLYVINYL CHLORIDE
PVI	POINT OF VERTICAL INTERSECTION
PVMT	PAVEMENT
PVT	POINT OF VERTICAL TANGENCY
QDRNT	QUADRANT
QTY	QUANTITY
R	R-VALUE (INSULATION)
R OR RAD	RADIUS
R	RISER
RC	REINFORCED CONCRETE
RCP	REINFORCED CONCRETE PIPE
RD	ROOF DRAIN
RDCR	REDUCER
REHAB	REHABILITATE
REINF	REINFORCE, REINFORCED, REINFORCING
REQD	REQUIRED
RESIL	RESILIENT
RM	ROOM
RO	ROUGH OPENING
RST	REINFORCING STEEL
S	SOUTH
S.A.T.	SUSPENDED ACOUSTICAL TILE
S/C	SECONDARY CLARIFIERS
SCBA	SELF CONTAINED BREATHING APPARATUS
SCHED	SCHEDULE
SD	SOAP DISPENSER, STORM DRAIN
SECT	SECTION
SG	SAFETY GLASS
SH	SHEET
SHTG	SHEETING
SIM	SIMILAR
SLV	SHORT LEG VERTICAL
S.O.	SHUTOFF
SPECD	SPECIFIED
SPECS	SPECIFICATIONS
SPG	SPACING
SQ	SQUARE
SST	STAINLESS STEEL
STA	STATION
STD	STANDARD
STIF	STIFFENER
STOR	STORAGE
STR	STRAIGHT
STRUCT	STRUCTURAL, STRUCTURE
STL	STEEL
SWD	SIDE WATER DEPTH
SYMM	SYMMETRICAL
T	TINTED
T	TANGENT LENGTH
T&B	TOP AND BOTTOM
TAS	THREADED ANCHOR STUD
TC	TOP OF CONCRETE, TOP OF CURB
TEMP	TEMPERED, TEMPERATURE
TF	TOP FACE
TG	TEMPERD GLASS
THK	THICK
THRD	THREADED
T.O.	TOP OF
TOG	TOP OF GROUT
TPD	TONS PER DAY
TPI	TURNOUT POINT OF INTERSECTION
TRANSV	TRANSVERSE
TRD	TREAD
TSS	TOTAL SUSPENDED SOLIDS
TST	TOP OF STEEL
TTD	TOILET TISSUE DISPENSER
TW	TOP OF WALL
TYP	TYPICAL
UBC	UNIFORM BUILDING CODE
UH	UNIT HEATER
UON	UNLESS OTHERWISE NOTED
UNO	UNLESS NOTED OTHERWISE
UR	URINAL
V	VENT, VOLT
VAC	VACUUM
V.A.T.	VINYL ASBESTOS TILE
VC	VERTICAL
VERT	VERTICAL
VCP	VITRIFIED CLAY PIPE
VTR	VENT THRU ROOF
VWC	VINYL WALL COVERING
W	WEST, WIDE FLANGE (BEAM)
W/	WITH
WAS	WASTE ACTIVATED SLUDGE
WC	WATER CLOSET
WD	WOOD
WG	WIRE GLASS
WH	WATER HEATER
WK	WEEK
WP	WORKING POINT
WR GWB	WATER RESISTANT GYPSUM WALLBOARD
WR	WASTE RECEPTACLE
WS	WATER STOP, WATERSURFACE, WELDED STEEL
WTR	WATER
WWM	WELDED WIRE MESH
XFMR	TRANSFORMER
YD	YARD
YR	YEAR

INSTRUMENTATION EQUIPMENT ABBREVIATIONS LIST

ACV	ANALYZER CONTROL VALVE
AE	ANALYZER ELEMENT
AI	ANALYZER INDICATOR
AIC	ANALYZER INDICATING CONTROLLER
AIT	ANALYZER INDICATING TRANSMITTER
ANT	ANTENNA
AR	ANALYZER RECORDER
ARC	ANALYZER RECORDING CONTROLLER
ASH	ANALYZER SWITCH HIGH
ASHH	ANALYZER SWITCH HIGH HIGH
ASL	ANALYZER SWITCH LOW
ASLL	ANALYZER SWITCH LOW LOW
ARIC	ANALYTICAL RATIO INDICATING CONTROLLER
AT	ANALYZER TRANSMITTER
CAB	CABINET
EXI	VOLTS/MILLIVOLTS TO CURRENT TRANSDUCER
EXP	VOLTS TO PRESSURE TRANSDUCER
FCV	FLOW CONTROL VALVE
FE	FLOW ELEMENT
FI	FLOW INDICATOR
FIC	FLOW INDICATING CONTROLLER
FIR	FLOW INDICATING RECORDER
FIT	FLOW INDICATING TRANSMITTER
FQ	FLOW TOTALIZER/INTEGRATOR
FQI	FLOW TOTALIZER INDICATOR
FQIT	FLOW TOTALIZER INDICATING TRANSMITTER
FR	FLOW RECORDER
FSH	FLOW SWITCH HIGH
FSHH	FLOW SWITCH HIGH HIGH
FSHL	FLOW SWITCH HIGH LOW
FSL	FLOW SWITCH LOW
FSLL	FLOW SWITCH LOW LOW
FT	FLOW TRANSMITTER
GWY	GATEWAY
HC	HAND CONTROLLER
HIC	HAND INDICATING CONTROLLER
HS	HAND SWITCH
HOA	HAND-OFF-AUTO SWITCH
ICI	INFINET TO COMPUTER INTERFACE
KY	TIME RELAY
L/R	LOCAL/REMOTE SWITCH
LC	LEVEL CONTROLLER
LCV	LEVEL CONTROL VALVE
LE	LEVEL ELEMENT
LG	LEVEL GAUGE
LI	LEVEL INDICATOR
LIC	LEVEL INDICATING CONTROLLER
LISH	LEVEL INDICATING SWITCH HIGH
LIT	LEVEL INDICATING TRANSMITTER
LR	LEVEL RECORDER
LRC	LEVEL RATIO CONTROLLER
LSH	LEVEL SWITCH HIGH
LSHH	LEVEL SWITCH HIGH HICH
LSHL	LEVEL SWITCH HIGH LOW
LSL	LEVEL SWITCH LOW
LSLL	LEVEL SWITCH LOW LOW
LSM	LEVEL SWITCH MIDDLE
LT	LEVEL TRANSMITTER
MCD	MOTORIZED CONTROL DAMPER
MPA	ANALOG MARSHALLING PANEL
MPC	MARSHALLING PANEL CONTROL
MPD	DIGITAL MARSHALLING PANEL
MSL	MOTION SWITCH
NE	MOISTURE PROBE
NI	MOISTURE INDICATOR
NSH	MOISTURE SWITCH HIGH
OJB	OPTICAL JUNCTION BOX
PCU	PROCESS CONTROL UNIT
PCV	PRESSURE CONTROL VALVE
PDI	PRESSURE DIFFERENTIAL INDICATOR
PDIC	PRESSURE DIFF. INDICATING CONTROLLER
PDIT	PRESSURE DIFF. INDICATING TRANSMITTER
PDS	PRESSURE DIFFERENTIAL SWITCH
PDSH	PRESSURE DIFFERENTIAL SWITCH HIGH
PDSL	PRESSURE DIFFERENTIAL SWITCH LOW
PDT	PRESSURE DIFFERENTIAL TRANSMITTER
PE	PRESSURE ELEMENT
PHE	pH ELEMENT
PHR	pH RECORDER
PI	PRESSURE INDICATOR
PIC	PRESSURE INDICATING CONTROLLER
PIT	PRESSURE INDICATING TRANSMITTER
PR	PRESSURE RECORDER
PRN	PRINTER
PSH	PRESSURE SWITCH HIGH
PSHH	PRESSURE SWITCH HIGH HIGH
PSHL	PRESSURE SWITCH HIGH LOW
PSL	PRESSURE SWITCH LOW
PSLL	PRESSURE SWITCH LOW LOW
PT	PRESSURE TRANSMITTER
PXI	PRESSURE TO CURRENT TRANSDUCER
PXP	PRESSURE TO PRESSURE TRANSDUCER
PY	PRESSURE CONVERTER (SIGNAL BOOST)
PZ	PRESSURE POSITIONER (ADJUST FOR PRESSURE CONTROL VALVE)
RIO	REMOTE INPUT/OUTPUT PROCESSOR
SAMP	SAMPLER
SE	SPEED ELEMENT
SI	SPEED INDICATOR (TACHOMETER)
ST	SPEED TRANSMITTER
SV	SOLENOID VALVE
SWR	SWITCHER
SY	SPEED CONVERTER (TRANSDUCER)
SZ	SPEED ACTUATOR (ENGINE)
TC	TEMPERATURE CONTROLLER
TCV	TEMPERATURE CONTROL VALVE
TE	TEMPERATURE ELEMENT
TI	TEMPERATURE INDICATOR
TIC	TEMPERATURE INDICATING CONTROL
TIS	TEMPERATURE INDICATING SWITCH
TIT	TEMPERATURE INDICATING TRANSMITTER
TQI	TORQUE INDICATOR
TQIC	TORQUE INDICATING CONTROL
TQIT	TORQUE INDICATING TRANSMITTER
TQR	TORQUE RECORDER
TQS	TORQUE SWITCH
TQSH	TORQUE SWITCH HIGH
TQT	TORQUE TRANSMITTER
TR	TEMPERATURE RECORDER
TSH	TEMPERATURE SWITCH HIGH
TSHH	TEMPERATURE SWITCH HIGH HIGH
TSL	TEMPERATURE SWITCH LOW
TSLL	TEMPERATURE SWITCH LOW LOW
TT	TEMPERATURE TRANSMITTER
TW	THERMAL WELL
TY	TEMPERATURE SELECT
UI	MULTIVARIABLE INDICATOR
UR	MULTIVARIABLE RECORDER
USH	MULTIVARIABLE SWITCH HIGH
VDT	VIDEO DISPLAY
WI	WEIGHT INDICATOR
WIT	WEIGHT INDICATING TRANSMITTER
XV	REMOTELY CONTROLLED ON-OFF VALVE
ZI	POSITION INDICATOR
ZIS	POSITION INDICATING SWITCH
ZIT	POSITION INDICATING TRANSMITTER
ZS	POSITION SWITCH
ZSC	POSITION SWITCH CLOSED
ZSO	POSITION SWITCH OPEN
ZT	POSITION TRANSMITTER

PIPE IDENTIFICATION

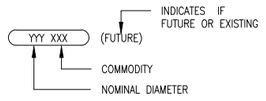

EQUIPMENT NUMBERING CONVENTION

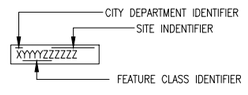

GENERAL NOTES

1. THIS DRAWING IS GENERAL IN NATURE, SOME ABBREVIATIONS SHOWN HERE MAY NOT BE USED.
2. SEE DRAWING G-04 FOR PROCESS EQUIPMENT LEGEND AND PIPING SYMBOLS.
3. SEE DRAWING G-05 FOR INSTRUMENTATION SYMBOLS.
4. SEE DRAWING G-06 AND G-07 FOR ELECTRICAL SYMBOLS.
5. SEE DRAWING G-08 FOR STRUCTURAL NOTES.
6. ADDITIONAL ABBREVIATIONS FOR INTRUMENTATION EQUIPMENT CAN BE FOUND USING THE FUNCTIONAL IDENTIFICATION MATRIX ON DRAWING G-05.

FOR SAMPLE ONLY

RECORD DRAWINGS

REVISIONS DRAWN BY: XX DATE: XX/XX/XX

THESE RECORD DRAWINGS HAVE BEEN PREPARED, IN PART, ON THE BASIS OF INFORMATION COMPILED BY OTHERS. THEY ARE NOT INTENDED TO REPRESENT IN DETAIL THE EXACT LOCATION, TYPE OF COMPONENT NOR MANNER OF CONSTRUCTION. THE ENGINEER WILL NOT BE RESPONSIBLE FOR ANY ERRORS OR OMISSIONS WHICH HAVE BEEN INCORPORATED INTO THE RECORD DRAWINGS.

EXAMPLE

FOR SEALS AND SIGNATURES

(PROJECT NAME)
GENERAL
GENERAL LEGEND AND PIPING SYMBOLS
DESCHUTES COUNTY, OREGON

REVISIONS:

(CONSULTANT ENGINEER NAME, ADDRESS & PHONE NUMBER)

DESIGNED BY:
DRAWN BY:
SCALE:
FILE:
DATE:

VERIFY SCALES
0 1"
BAR EQUALS ONE INCH ON ORIGINAL DRAWING

SHEET: G-002

COB # (XXXXXX)

EQUIPMENT

- VFD — VARIABLE SPEED CONTROLLER (ELEC)
- BAR SCREEN, MECHANICAL
- INLINE SLUDGE SCREEN
- BLOWER OR CENTRIFUGAL FAN
- SLIDING VANE COMPRESSOR
- BOILER
- BURNER, WASTE GAS
- CENTRIFUGE
- CHILLER
- COMPRESSOR, ROTARY SCREW
- COMPRESSOR, PISTON
- DIFFUSER HEADER
- ENGINE
- EJECTOR, PNEUMATIC
- FILTER OR FILTER-SILENCER, INLET AIR
- RAG — RIGHT ANGLE GEAR
- TURBINE GENERATOR
- GRINDER
- HEAT EXCHANGER, PLATE TYPE
- HEAT EXCHANGER, SPIRAL TYPE
- HEAT EXCHANGER, STRAIGHT TUBE TYPE
- HEAT EXCHANGER, U-TUBE TYPE
- MIXER
- MIXER, HORIZONTAL SURFACE
- MIXER, INLINE STATIC
- M — MOTOR
- PUMP, CENTRIFUGAL
- PUMP, DIAPHRAGM
- PUMP, DIAPHRAGM OPERATED
- PUMP, GEAR
- PUMP, IN-LINE CENTRIFUGAL
- PUMP, METERING
- PUMP, PROGRESSIVE CAVITY
- PUMP, ROTARY LOBE
- PUMP, SUBMERSIBLE
- PUMP, VERTICAL
- PUMP, LINE SHAFT
- WEIR
- STOP LOG
- SLIDE GATE (NORMALLY CLOSED)
- SLIDE GATE (NORMALLY OPEN)
- RECTANGULAR BUTTERFLY VALVE (NORMALLY CLOSED)
- RECTANGULAR BUTTERFLY VALVE (NORMALLY OPEN)
- SLIDE GATE (NORMALLY CLOSED)
- SLIDE GATE (NORMALLY OPEN)
- TELESCOPIC GATE VALVE

EQUIPMENT

- FLAP GATE
- SCREEN, ROTARY OVERFLOW
- SILENCER
- CONDENSATE TANK
- RECEIVER OR PRESSURE VESSEL
- TANK, DOUBLE WALLED
- TANK

VALVES

- THREE WAY VALVE SOLENOID VALVE
- GATE VALVE (NORMALLY OPEN)
- GATE VALVE (NORMALLY CLOSED)
- PLUG VALVE (NORMALLY OPEN)
- PLUG VALVE (NORMALLY CLOSED)
- BALL VALVE (NORMALLY OPEN)
- BALL VALVE (NORMALLY CLOSED)
- BUTTERFLY VALVE
- BUTTERFLY DAMPER VALVE
- GLOBE VALVE
- DIAPHRAGM VALVE
- ANGLE VALVE
- FLOAT VALVE
- PINCH VALVE
- NEEDLE VALVE
- DOUBLE LEAF CHECK VALVE
- CHECK VALVE
- KO — BALL CHECK VALVE
- REDUCED PRESSURE BACKFLOW PREVENTER
- DOUBLE CHECK VALVE BACKFLOW PREVENTER
- PUMP DISCHARGE VALVE (TRIPLE DUTY)
- GAUGE OR ROOT VALVE
- KNIFE GATE VALVE
- BALANCING COCK
- CIRCUIT BALANCING VALVE
- THERMOSTATICALLY CONTROLLED VALVE
- PRESSURE REGULATING VALVE (EXTERNAL SENSING)
- PRESSURE REGULATING VALVE (INTERNAL SENSING)
- BACK PRESSURE REGULATING VALVE
- PRESSURE AND VACUUM RELIEF VALVE
- VACUUM RELIEF VALVE
- PRESSURE RELIEF VALVE
- IN-LINE, SPRING LOADED RELIEF VALVE
- MUD VALVE

VALVE OPERATORS

SOLENOID	HAND JACK	W/ POSITIONER	DIAPHRAGM (PRESSURE BALANCE)	DIAPHRAGM (SPRING OPPOSED)	SELF REGULATING	PRESSURE BALANCE	PISTON	MOTOR
S	T							M

FITTINGS/LINE STRAINERS

UNION	CONCENTRIC	ECCENTRIC FLAT BOTTOM	ECCENTRIC FLAT TOP	FLEX CONNECTOR	BLIND	FLANGES	EXPANSION JOINT	FLAME ARRESTOR	WELDED CAP
	3 X 2	3 X 2	3 X 2		OPEN CLOSED				

QUICK CONNECT	DRAIN TO GRADE/GROUND	SPRAY NOZZLE	STEAM TRAP	DIAPHRAGM SEAL	PIPING SPECIFICATION BREAK	SPEC. CHANGE	TIE POINT	RUPTURE DISC
	X		T		PIPE SPEC | PIPE SPEC		TP-###	X" SET @ XXX PSIG

Y-STRAINER W/VALVE	Y-STRAINER W/VALVE	Y-STRAINER PLUGGED	T-STRAINER	TEMP. STRAINER	CLEAN OUT	SAMPLE	STEAM OUT	WATER PURGE
X"	X"			T	CO	S	SO	WP

GENERAL NOTES

1. THIS DRAWING IS GENERAL IN NATURE. SOME SYMBOLS SHOWN HERE MAY NOT BE USED.
2. SEE DRAWING G-002 FOR EQUIPMENT AND PIPE COMMODITY DESIGNATION SYSTEMS.
3. SEE DRAWING G-004 FOR INSTRUMENTATION SYMBOLS.
4. TAG NAMING CONVENTION IS NOT FINALIZED IN THIS REVISION.

PROCESS LINES

- PRIMARY PROCESS FLOW
- SECONDARY PROCESS FLOW
- FUTURE
- VENDOR PACKAGE BOUNDARY
- EXISTING PIPING AND EQUIPMENT
- EXISTING PIPING TO BE REMOVED
- ENCLOSURE BOUNDARY

EQUIPMENT LEGENDS

NEW | EXISTING | DEMOLISHED

PROCESS AND SIGNAL CROSS REFERENCE SYSTEM

1. ON DRAWING W-P2-PID1001 CONTINUATION IS SHOWN AS:

   101 | W-P2-PID1002

2. ON DRAWING W-P2-PID1002 THIS CONTINUATION IS SHOWN AS:

   101 | W-P2-PID1001

EXAMPLE

FOR SEALS AND SIGNATURES

(PROJECT NAME)
GENERAL
PROCESS EQUIPMENT LEGEND AND PIPING SYMBOLS
DESCHUTES COUNTY, OREGON

REVISIONS:

(CONSULTANT ENGINEER NAME, ADDRESS & PHONE NUMBER)

DESIGNED BY:
DRAWN BY:
SCALE:
FILE:
DATE:

VERIFY SCALES
0 1"
BAR EQUALS ONE INCH ON ORIGINAL DRAWING

SHEET: G-003

COB # (XXXXXX)

FOR SAMPLE ONLY

RECORD DRAWINGS

REVISIONS DRAWN BY: XX DATE: XX/XX/XX

THESE RECORD DRAWINGS HAVE BEEN PREPARED, IN PART, ON THE BASIS OF INFORMATION COMPILED BY OTHERS. THEY ARE NOT INTENDED TO REPRESENT IN DETAIL THE EXACT LOCATION, TYPE OF COMPONENT NOR MANNER OF CONSTRUCTION. THE ENGINEER WILL NOT BE RESPONSIBLE FOR ANY ERRORS OR OMISSIONS WHICH HAVE BEEN INCORPORATED INTO THE RECORD DRAWINGS.

FUNCTIONAL IDENTIFICATION

	FIRST LETTER		SUCCEEDING–LETTERS		
	MEASURED OR INITIATING VARIABLE	MODIFIER	READOUT OR PASSIVE FUNCTION	OUTPUT FUNCTION	MODIFIER
A	ANALYSIS		ALARM		
B	BURNER, COMBUSTION			CLOSE–STOP DECREASE	
C	CONDUCTIVITY, pH (ACIDITY)		CLOSE	CONTROL OR CONTROLLER	
D	DENSITY	DIFFERENTIAL		OPEN–START–INCREASE	
E	VOLTAGE		SENSOR (PRIMARY ELEMENT)		
F	FLOW RATE	RATIO (FRACTION)			FAIL
G	GAS		GLASS VIEWING DEVICE		
H	HAND				H–HIGH–(ALARM) HH–HIGH–(SHUTDOWN)
I	CURRENT (ELECTRICAL)		INDICATE		
J	POWER	SCAN			
K	TIME, TIME SCHEDULE	TIME RATE OF CHANGE		CONTROL STATION	
L	LEVEL		LIGHT		L–LOW–(ALARM) LL–LOW–(SHUTDOWN)
M	MOISTURE	MOMENTARY	ON OR OPERATE		MIDDLE, INTERMEDIATE
N			SET POINT		
O	UNCLASSIFIED		OPEN ORIFICE, RESTRICTION POINT (TEST) CONNECTION		OVERLOAD
P	PRESSURE, VACUUM			PNEUMATIC	
Q	QUANTITY	INTEGRATE, TOTALIZE		INTEGRATE OR TOTALIZE	
R	RADIATION		RECORD		
S	SPEED, FREQUENCY, SOLENOID	SAFETY		SWITCH, OR SAFETY	
T	TEMPERATURE			TRANSMIT	
U	MULTIVARIABLE		MULTIFUNCTION	MULTIFUNCTION	
V	VIBRATION, MECHANICAL ANALYSIS			VALVE, DAMPER, LOUVRE	MULTIFUNCTION
W	WEIGHT, FORCE		WELL		
X	ON/OFF	X AXIS	UNCLASSIFIED	UNCLASSIFIED	
Y	EVENT, STATE, PRESENCE	Y AXIS		RELAY, COMPUTE, CONVERT	UNCLASSIFIED
Z	POSITION, DIMENSION	Z AXIS		DRIVER, ACTUATOR, UNCLASSIFIED – FINAL CONTROL ELEMENT	

TYPICAL INSTRUMENT IDENTIFICATION

FIELD TAG IDENTIFICATION

EXAMPLE WRF–001–PDSHH–001–1010–A1

- SUFFIX
- LOOP NUMBER
- WATER RECLAMATION PLANT SPECIFIC
- EQUIPMENT ACRONYM OR ISA (FUNCTIONAL IDENTIFICATION)
- FACILITY IDENTIFIER
- CITY DEPARTMENT IDENTIFIER

SCHEMATIC IDENTIFICATION

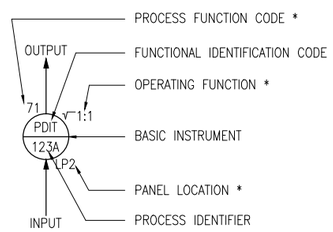

* OPTIONAL

CITY DEPARTMENT IDENTIFIER – (3 CHARACTER)

1. C – COLLECTIONS OPERATIONS
2. W – WATER OPERATIONS
3. D – DRAINAGE OPERATIONS
4. WRF – WATER RECLAMATION PLANT

FACILITY IDENTIFIER – (UP TO 4 CHARACTER)

1. XXXX – COLLECTION PUMP STATIONS
2. XXXX – WATER RESERVOIR
3. XXXX – STORM SEWER STATIONS
4. XXXX – PRESSURE (XXX)

EQUIPMENT ACRONYM OR ISA – (UP TO 5 CHARACTER)

SEE DWG WPRV015–G002 FOR DETAILS

WATER RECLAMATION PLANT SPECIFIC – (4 CHARACTERS)

LOOP NUMBER – (4 NUMERALS)

SUFFIX – (UP TO 2 CHARACTERS)

USED ONLY WHEN 2 OR MORE INSTRUMENTS ARE IN THE LOOP

INSTRUMENT AND FUNCTION SYMBOLS

- XXXX / XXXX — FIELD MOUNTED INSTRUMENT
- XXXX / XXXX — LOCAL PANEL – MOUNTED INSTRUMENT. ACCESSIBLE
- XXXX / XXXX — INSTRUMENT MOUNTED BEHIND LOCAL CONTROL PANEL. NOT READILY ACCESSIBLE
- XXXX / XXXX — INSTRUMENT MOUNTED ON MAIN PANEL. ACCESSIBLE
- XXXX / XXXX — INSTRUMENT MOUNTED BEHIND MAIN PANEL. NOT READILY ACCESSIBLE
- XXXX / XXXX — FIELD MOUNT ANNUNCIATOR POINT
- XXXX / XXXX — MAIN PANEL MOUNT ANNUNCIATOR POINT
- XXXX / XXXX — LOCAL PANEL MOUNT ANNUNCIATOR POINT
- XXXX / XXXX — SPECIAL PURPOSE DIGITAL DEVICE FOR PROCESSING MAINLY ANALOG INFORMATION. EG. SLDC (SINGLE LOOP DIGITAL CONTROLLER)
- XXXX / XXXX — ANALOG INPUT
- XXXX / XXXX — ANALOG OUTPUT
- XXXX / XXXX — DISCRETE INPUT
- XXXX / XXXX — DISCRETE OUTPUT
- GENERALIZED FOR COMPLEX INTERLOCK LOGIC PERFORMED IN SOFTWARE. SEE SPECIFICATIONS FOR DETAILS.
- XXXX / XXXX — SPECIAL PURPOSE DIGITAL DEVICE FOR PROCESSING MAINLY ANALOG INFORMATION. ACCESSIBLE
- XXXX / XXXX — CONTROL SYSTEM DIGITAL INPUT/OUTPUT
- XXXX / XXXX — COMPUTER – INTERNAL SYSTEM FUNCTION (i.e. COMPUTATION/SIGNAL CONDITIONING)
- XXXX / XXXX — COMPUTER – INTERNAL SYSTEM FUNCTION NORMALLY ACCESSIBLE TO OPERATOR
- XXX–XXXX — EQUIPMENT TAG
- PROPOSED NEW INSTRUMENT
- PROPOSED REMOVAL

INSTRUMENT OPERATING FUNCTIONS

ANALYTICAL FUNCTIONS

RES Cl_2	RESIDUAL CHLORINE
SO_2	SULFUR DIOXIDE
COMB	COMBUSTIBLE GAS
H_2S	HYDROGEN SULFIDE
pH	pH
DO	DISSOLVED OXYGEN
O_2	OXYGEN
VIB	VIBRATION
CO	CONDUCTIVITY

SWITCHING FUNCTIONS

3W	THREE–WAY SWITCH
EH	EMERGENCY HIGH (24VDC BACKED)
MS	MOTOR–RATED SWITCH
HA	HAND–AUTO SELECTION
HOA	HAND–OFF–AUTO SELECTION
JOA	JOG–OFF–AUTO SELECTION
S/S	START–STOP
L/L	LEAD–LAG SELECTION
LLCO	LOW LEVEL CUT OFF
F/S	FAST–SLOW SELECTION
OCA	OPEN–CLOSE–AUTO SELECTION
OSC	OPEN–STOP–CLOSE SELECTION
SEL	SELECTOR SWITCH
O/O	ON–OFF SELECTION
M/A	MANUAL–AUTO SELECTION
L/R	LOCAL–REMOTE SELECTION
ESD	EMERGENCY SHUTDOWN
ACK	ACKNOWLEDGE (ALARM)
D/P	DIFFERENTIAL PRESSURE
I/P	CURRENT TO PRESSURE
IBD	INBOARD BEARING
OBD	OUTBOARD BEARING
RSP	REMOTE SET POINT
RST	RESET

PRIMARY ELEMENT SYMBOLS

- ORIFICE PLATE
- VENTURI OR FLOW TUBE
- FLUME
- WEIR
- F1 — VARIABLE AREA FLOW INDICATOR (ROTAMETER)
- FT — FLOW ELEMENT INTEGRAL WITH TRANSMITTER (MASS FLOW, ETC)
- DIAPHRAGM SEAL
- IN–LINE PRESSURE SENSOR
- VORTEX FLOW SENSOR
- IN–LINE CAPACITANCE FLOW ELEMENT
- M — MAGNETIC FLOWMETER
- SONIC FLOWMETER (DOPPLER OR TRANSIT TIME)
- POSITIVE DISPLACEMENT METER
- T — THERMAL MASS FLOW ELEMENT
- ANNUBAR
- PITOT TUBE
- PROPELLER OR TURBINE METER
- C — CORIOLIS MASS FLOWMETER
- TILT FLOAT SWITCH
- FLOAT SWITCH
- DISPLACEMENT LEVEL ELEMENT
- LE — ULTRASONIC/MICROWAVE LEVEL ELEMENT
- LE — RADIO FREQUENCY LEVEL ELEMENT
- LE — SUBMERSIBLE LIQUID LEVEL ELEMENT
- TE — THERMAL SENSING RTD STRIP

INSTRUMENT SIGNAL SYMBOLS

- INSTRUMENT SUPPLY, PROCESS TAPS
- PNEUMATIC SIGNAL
- ELECTRIC SIGNAL DISCRETE, 120VAC
- ELECTRIC SIGNAL DISCRETE, 24VDC
- ELECTRIC SIGNAL ANALOG
- CAPILLARY TUBE OR FILLED SYSTEM
- ELECTROMAGNETIC OR SONIC SIGNAL (GUIDED)
- ELECTROMAGNETIC OR SONIC SIGNAL (UNGUIDED)
- SOFTWARE AND DATA LINK IN CONTROL SYSTEM
- MECHANICAL LINK
- HYDRAULIC

MISCELLANEOUS SYMBOLS

- I — INTERLOCK – SEE CONTROL STRATEGY DESCRIPTION
- R — RESET FOR LATCH–TYPE OPERATOR
- ANNUNCIATOR HORN
- GROUND
- INSTRUMENT LOOP SHIELD GROUND
- BOND

LINE DESIGNATIONS

- ES — ELECTRIC POWER SUPPLY 120 VAC 60 HZ (UNLESS OTHERWISE NOTED)
- SA — SERVICE AIR SUPPLY
- IA — INSTRUMENT QUALITY AIR SUPPLY
- C2 — WATER SUPPLY C1, C2, C3, ETC.

GENERAL NOTES

1. THIS DRAWING IS GENERAL IN NATURE. SOME SYMBOLS SHOWN HERE MAY NOT BE USED.
2. REFER TO DRAWING G–002 AND G–003 FOR EQUIPMENT AND PIPE COMMODITY DESIGNATIONS.
3. TAG NAMING CONVENTION IS NOT FINALIZED IN THIS REVISION.

FOR SAMPLE ONLY

RECORD DRAWINGS

REVISIONS DRAWN BY: XX DATE: XX/XX/XX

THESE RECORD DRAWINGS HAVE BEEN PREPARED, IN PART, ON THE BASIS OF INFORMATION COMPILED BY OTHERS. THEY ARE NOT INTENDED TO REPRESENT IN DETAIL THE EXACT LOCATION, TYPE OF COMPONENT NOR MANNER OF CONSTRUCTION. THE ENGINEER WILL NOT BE RESPONSIBLE FOR ANY ERRORS OR OMISSIONS WHICH HAVE BEEN INCORPORATED INTO THE RECORD DRAWINGS.

SAMPLE

FOR SEALS AND SIGNATURES

(PROJECT NAME)
GENERAL
INSTRUMENTATION LEGEND AND SYMBOLS
DESCHUTES COUNTY, OREGON

REVISIONS:

(CONSULTANT ENGINEER NAME, ADDRESS & PHONE NUMBER)

DESIGNED BY:
DRAWN BY:
SCALE:
FILE:
DATE:

VERIFY SCALES
0 1"
BAR EQUALS ONE INCH ON ORIGINAL DRAWING

SHEET: G-004

COB # (XXXXXX)

CIRCUITS AND RACEWAYS

MCC1000/HS1010–C — RACEWAY IDENTIFIER

RACEWAY EXPOSED

RACEWAY CONCEALED

RACEWAY TURNED TOWARD THE THE VIEWER.

RACEWAY TURNED DOWN

CONDUIT PLUGGED FLUSH

CONDUIT CAPPED

DUCT BANK, NON–REINFORCED CONCRETE

DUCT BANK, REINFORCED CONCRETE

HH23 / X — MANHOLE (MH) OR HANDHOLE (HH), X = CABLE TYPE (SEE CABLE IDENTIFICATION SYSTEM)

JB2700A / J — JUNCTION BOX. OPTIONAL IDENTIFIER.

TB1035 / TB — TERMINAL BOX. OPTIONAL IDENTIFIER.

PBD–A–1,3,5 — HOME RUN – SEE PANELBOARD, SWITCHBOARD, OR MCC SCHEDULE FOR CIRCUIT INFORMATION.

EXAMPLE: HOME TO PANELBOARD PBD–A, CIRCUITS 1, 3, AND 5.

DISTRIBUTION EQUIPMENT

APPROXIMATE SHAPE AND SCALE REPRESENTED WHERE POSSIBLE. HOWEVER, EXACT SIZE AND NUMBER OF SECTIONS IS ESTIMATED.

FLOOR–STANDING DISTRIBUTION ASSEMBLY, SUCH AS A SWITCHBOARD, TRANSFORMER, OR MOTOR CONTROL CENTER

MCC1234 — EQUIPMENT DESIGNATION (EXAMPLE)

WALL–MOUNTED DISTRIBUTION ASSEMBLY, SUCH AS PANELBOARD, MOTOR STARTER PANEL, OR TERMINAL CABINET

PBD1234 120/208V — EQUIPMENT DESIGNATION (EXAMPLE)

120/240V

120/208V

480V

T — TRANSFORMER

GROUNDING

GROUND ROD

GROUND ROD WITH GROUND WELL

GROUND CONNECTION, COMPRESSION OR EXOTHERMIC.

G — GROUNDING CONDUCTOR

LIGHTING

FIXTURE IDENTIFIER:

5 XX 2/40 8'–6" R

- NUMBER OF FIXTURES (OPTIONAL IDENTIFIER)
- FIXTURE TYPE. REFER TO LIGHT SPEC. TYPE APPLIES TO ALL FIXTURES OF THE SAME SHAPE WITHIN A ROOM OR AREA.
- MOUNTING (OPTIONAL IDENTIFIER):
  - L = POLE
  - G = GROUND
  - P = PENDANT
  - R = RECESSED
  - S = SURFACE
  - W = WALL
- MOUNTING HEIGHT, FLOOR TO BOTTOM OF FIXTURE UON. AHAP= AS HIGH AS POSSIBLE.
- NUMBER OF LAMPS/LAMP WATTAGE (OPTIONAL IDENTIFIER)

LIGHTING FIXTURE SHAPES AND SCALE ARE REPRESENTED WHERE POSSIBLE. THE EXAMPLES SHOWN BELOW ARE TYPICAL APPLICATIONS.

FLUORESCENT FIXTURE

COMPACT FLUORESCENT OR HID FIXTURE

WALL MOUNTED FIXTURE

DIRECTIONAL LIGHT

POLE MOUNTED AREA LIGHT

EXISTING LIGHT POST

EMERGENCY LIGHTING UNIT. SELF CONTAINED.

EXIT SIGN. DARK QUADRANTS INDICATE FACES ILLUMINATED. DIRECTIONAL ARROWS INDICATED.

3a — CIRCUIT IDENTIFIER: WHEN SHOWN ADJACENT TO FIXTURE IDENTIFIES CIRCUIT NUMBER AND SWITCH. EXAMPLE: CIRCUIT 3, CONTROLLED BY SWITCH a.

EXIT AND EMERGENCY UNIT SIGN. DARK QUADRANTS INDICATE FACES ILLUMINATED. DIRECTIONAL ARROWS INDICATED.

WIRING DEVICES

SWITCHES:

UNLESS OTHERWISE NOTED, ALL SWITCHES ARE WALL MOUNTED.

$ — TOGGLE SWITCH, SINGLE POLE, 20 AMP

$$ — GANGED SWITCHES IN COMMON BOX WITH COMMON WALL PLATE

$a3 — SUPERSCRIPT INDICATES CIRCUIT CONTROLLED: a, b, c, ETC. MAY BE COMBINED WITH CIRCUIT NUMBER. EXAMPLE: 1a, 4b, ETC.

SUBSCRIPT MODIFIER INDICATES:
- 2 = DOUBLE POLE
- 3 = THREE WAY
- 4 = FOUR WAY
- D = DIMMER
- K = KEY OPERATED
- MC = MOMENTARY CONTACT, THREE POSITION
- MS = MANUAL (MOTOR) STARTER OR SWITCH
- R = RHEOSTAT (DIMMER, SPEED CONTROL)

RECEPTACLES:

UNLESS OTHERWISE NOTED, ALL RECEPTACLES ARE 120 VOLT, SINGLE PHASE, STRAIGHT BLADE, NON–LOCKING, GROUNDING STYLE.

DUPLEX RECEPTACLE, 20 AMP, 3 WIRE

RECEPTACLE MODIFIERS:
- C = CLOCK HANGER
- WP = WEATHER PROOF
- GFCI = GROUND FAULT CIRCUIT INTERRUPTER
- H = HAZARDOUS AREA–EXPLOSION PROOF

EXPLOSION PROOF, CLASS 1, 20A DEAD FRONT, 45° ANGLE, TWO GANG

RECESSED FLOOR RECEPTACLE–– ANY RECEPTACLE INSIDE A SQUARE.

SURFACE FLOOR RECEPTACLE–– ANY RECEPTACLE INSIDE A TRIANGLE.

DOUBLE DUPLEX RECEPTACLES––IN COMMON BOX, WITH COMMON WALL PLATE.

X — SPECIAL RECEPTACLE–– X = NEMA DESIGNATOR, EXAMPLE: L22–20R

TELEPHONE & COMMUNICATION SYSTEMS

UNLESS OTHERWISE NOTED, TELEPHONE OUTLETS SHALL BE MOUNTED AT SAME HEIGHT AS THE RECEPTACLES. VERIFY.

(OPTIONAL SUPERSCRIPT) +48"AFF — EXTERNAL LINE OR PLANT PHONE SYSTEM OUTLET

MODIFIERS:
- A = ATTENDANT'S CONSOLE
- F = FUTURE INSTRUMENT
- J = JACK, PLUG–IN TYPE
- W = WALL INSTRUMENT

BELL

TV CAMERA

SPEAKER

DATA

MOTORS AND EQUIPMENT

MOTOR STARTER, INDIVIDUAL. NOT LOCATED IN AN MCC OR SIMILAR GROUP ASSEMBLY

COMBINATION MOTOR STARTER. NOT LOCATED IN AN MCC OR SIMILAR GROUP ASSEMBLY

DISCONNECT SWITCH, NON–FUSED

F — DISCONNECT SWITCH, FUSED

M — MOTOR

H — HEATER

T — THERMOSTAT

WH — WATER HEATER

FIELD INSTRUMENT

CONTROL STATION. SEE CONTROL DIAGRAMS FOR DEVICES REQUIRED

P 1234 — EQUIPMENT OR INSTRUMENTATION DESIGNATION (EXAMPLE)

CABLE IDENTIFICATION SYSTEM

1. LABEL CABLES WITH "ORIGIN/DESTINATION" AS PREFIX AND CABLE TYPE AS SUFFIX (e.g. MCC1000/HS1010–C). SEE EXPLANATION BELOW:

MCC1000 / HS 1 010 A1 – C
- ORIGIN
- DESTINATION
- CABLE TYPE

ORIGIN / DESTINATION

MOTOR EQUIPMENT OR INSTRUMENTATION EQUIPMENT IDENTIFICATION.

CABLE TYPE – (1 CHARACTER)

- P POWER
- C CONTROL
- S SIGNAL (FOUNDATION FIELDBUS AND 4–20mA ANALOG I/O
- D DATA (INCLUDES ALL NON–FIBER OPTIC NETWORKS
- F OPTICAL FIBER

GENERAL NOTES

1. ALL ELECTRICAL EQUIPMENT AND MATERIALS SHALL BE APPROVED FOR USE BY THE CITY OF BEND PRIOR TO INSTALLATION. EQUIPMENT DATA SHALL BE SUBMITTED AS DIRECTED BY THE CITY.
2. ALL ELECTRICAL WORK SHALL COMPLY WITH THE APPLICABLE PORTIONS OF THE OREGON ELECTRICAL SPECIALTY CODE (OESC), THE NATIONAL ELECTRIC CODE (NEC), AND LOCAL CODES IN FORCE AT THE TIME OF CONSTRUCTION.
3. ALL ELECTRICAL EQUIPMENT AND MATERIALS SHALL BE APPROVED BY UNDERWRITERS LABORATORIES INC. (UL) FOR THE PURPOSE FOR WHICH THEY ARE USED, AND ALL SHALL BEAR A UL LABEL.
4. ALL ELECTRICAL EQUIPMENT AND RACEWAY SHALL BE SUPPORTED / ANCHORED / BRACED TO MEET ALL IMPOSED GRAVITY, WIND, AND/OR SEISMIC FORCES, IN ACCORDANCE WITH THE REQUIREMENTS OF THE OREGON STRUCTURAL SPECIALTY CODE AND THE INTERNATIONAL BUILDING CODE. WHERE THE DESIGN OF THESE SUPPORT SYSTEMS ARE NOT PROVIDED AS PART OF THESE CONTRACT DOCUMENTS, THE CONTRACTOR SHALL BE RESPONSIBLE FOR THIS DESIGN AND SHALL PROVIDE MANUFACTURERS DATA OR CALCULATIONS PREPARED BY A STRUCTURAL ENGINEER REGISTERED IN THE STATE OF OREGON VERIFYING COMPLIANCE WITH THESE REQUIREMENTS.
5. ALL EQUIPMENT LOCATIONS AND DIMENSIONS SHALL BE FIELD–VERIFIED AND FINAL LOCATIONS SHALL BE APPROVED BY THE CITY OF BEND PRIOR TO INSTALLATION.
6. CONDUITS SHALL BE INSTALLED WITH A MINIMUM NUMBER OF BENDS, LIMITED TO MEET NEC REQUIREMENTS. CONTRACTOR TO PROVIDE FITTINGS AND BOXES AS REQUIRED TO LIMIT THE NUMBER OF BENDS.
7. CONDUIT RUNS ON DRAWINGS ARE PRESENTED DIAGRAMMATICALLY AND ARE NOT INTENDED TO DEPICT ACTUAL ROUTING. CONTRACTOR TO ROUTE CONDUITS PARALLEL AND PERPENDICULAR TO EQUIPMENT AND STRUCTURES. GROUP MULTIPLE CONDUIT RUNS AND NEATLY RACK AND SUPPORT. COORDINATE RACEWAY LAYOUT WITH MECHANICAL, PIPING, AND STRUCTURAL SYSTEMS. ROUTE SURFACE CONDUITS VERTICALLY, WHERE POSSIBLE, TO ALLOW FOR FUTURE WALL–MOUNTED INSTALLATIONS ON UNUSED SPACE.
8. PROVIDE CLEARLY VISIBLE ARC FLASH LABELING ON NEW ELECTRICAL EQUIPMENT TO COMPLY WITH NEC ARTICLE 110.16, "ELECTRICAL EQUIPMENT, SUCH AS SWITCHBOARDS, PANELBOARDS, INDUSTRIAL CONTROL PANELS, METER SOCKET ENCLOSURES, AND MOTOR CONTROL CENTERS, THAT ARE IN OTHER THAN DWELLING UNITS, AND ARE LIKELY TO REQUIRE EXAMINATION, ADJUSTMENT, SERVICING, OR MAINTENANCE WHILE ENERGIZED SHALL BE FIELD MARKED TO WARN QUALIFIED PERSONS OF POTENTIAL ARC FLASH HAZARDS."
9. ALL CONDUCTORS #6 AND SMALLER SHALL HAVE COLORED INSULATION JACKETS MEETING THE FOLLOWING COLOR CODING. CONDUCTORS #4 AND LARGER SHALL HAVE THE SAME COLOR CODING OR COLORED TAPE AT EACH END TO MATCH THE FOLLOWING COLOR CODES:

	208Y/120V	480Y/277V
A⌀ (LEFT BUS IN PANEL)	BLACK	BROWN
B⌀ (CENTER BUS IN PANEL)	RED	ORANGE
C⌀ (RIGHT BUS IN PANEL)	BLUE	YELLOW
NEUTRAL	WHITE	GRAY
GROUND	GREEN	GREEN

10. CONTRACTOR SHALL BE RESPONSIBLE FOR ROUTING, PROVIDING, AND INSTALLING ALL CONDUITS AND CONDUCTORS REQUIRED TO RESULT IN FULLY FUNCTIONING EQUIPMENT, WHETHER OR NOT SUCH CONDUIT IS SHOWN ON THESE DRAWINGS.
11. CONTRACTOR SHALL BE RESPONSIBLE FOR PROVIDING PROPERLY SIZED STARTER OVERLOADS FOR ALL STARTER EQUIPMENT FURNISHED.

SYMBOL GENERAL NOTES:

1. NEW WORK SHOWN IN BOLD LINE WEIGHT. EXISTING CONDITIONS SHOWN IN LIGHT LINE WEIGHT.
2. THIS DRAWING IS GENERAL IN NATURE. SOME SYMBOLS SHOWN HEREON MAY NOT BE USED ON THE CONTRACT DRAWINGS.
3. SYMBOLS ARE ARRANGED ON SPECIFIC DRAWINGS AND IN CATEGORIES FOR CONVENIENCE ONLY; SYMBOLS MAY BE USED ON ANY OF THE CONTRACT DRAWINGS.
4. IDENTIFICATIONS (ID), SIZES, RATINGS, LOCATIONS AND SIMILAR INFORMATION SHOWN ASSOCIATED WITH SYMBOLS ARE OPTIONAL; EXAMPLES OF SUCH INFORMATION ARE SHOWN WITH SOME SYMBOLS FOR CLARITY.
5. CABLE IDENTIFICATION SYSTEM IS NOT FINALIZED IN THIS REVISION.

EXAMPLE

FOR SAMPLE ONLY

RECORD DRAWINGS

REVISIONS DRAWN BY: XX DATE: XX/XX/XX

THESE RECORD DRAWINGS HAVE BEEN PREPARED, IN PART, ON THE BASIS OF INFORMATION COMPILED BY OTHERS. THEY ARE NOT INTENDED TO REPRESENT IN DETAIL THE EXACT LOCATION, TYPE OF COMPONENT NOR MANNER OF CONSTRUCTION. THE ENGINEER WILL NOT BE RESPONSIBLE FOR ANY ERRORS OR OMISSIONS WHICH HAVE BEEN INCORPORATED INTO THE RECORD DRAWINGS.

FOR SEALS AND SIGNATURES

(PROJECT NAME)
GENERAL
ELECTRICAL NOTES AND STANDARD SYMBOLS
DESCHUTES COUNTY, OREGON

REVISIONS:

(CONSULTANT ENGINEER NAME, ADDRESS & PHONE NUMBER)

DESIGNED BY:
DRAWN BY:
SCALE:
FILE:
DATE:

VERIFY SCALES
0 1"
BAR EQUALS ONE INCH ON ORIGINAL DRAWING

SHEET: G-005

COB # (XXXXXX)

CONTROL DIAGRAM SYMBOLS

GENERAL

- ENCLOSURE BOUNDARY, EXISTING
- ENCLOSURE BOUNDARY, NEW
- CONDUCTORS CONNECTED
- CONDUCTORS NOT CONNECTED
- TERMINAL POINT FOR EXTERNAL CONNECTIONS
- EXISTING EQUIPMENT

DISCONNECTS AND OVERCURRENT DEVICES

MCP — MOTOR CIRCUIT PROTECTOR

CIRCUIT BREAKER, THERMAL– MAGNETIC, 3 POLE, UON.

MODIFIERS:
- /M MAGNETIC ONLY
- /2P POLES, IF OTHER THAN 3

FUSE SIZE — FUSE

MODIFIERS:
- CLF = CURRENT LIMITING FUSE
- DE = DUAL ELEMENT
- F = CLASS F

NEON BLOWN FUSE INDICATOR

SELECTOR SWITCHES

ID, 1, 2
- 2 POSITION MAINTAINED CONTACT
- (XO) CLOSED IN POSITION 1
- (OX) CLOSED IN POSITION 2

ID, 1, 2
- 2–POSITION SPRING RETURNED TO RIGHT
- (XO) CLOSED IN POSITION 1
- (OX) CLOSED IN POSITION 2

ID, 1, 2, 3
- 3–POSITION MAINTAINED CONTACT
- (XOO) CLOSED IN POSITION 1
- (OXO) CLOSED IN POSITION 2
- (OOX) CLOSED IN POSITION 3

PUSHBUTTONS

ID LOCATION
- PUSH BUTTON, MOMENTARY CONTACT, NORMALLY OPEN
- PUSH BUTTON, MOMENTARY CONTACT, NORMALLY CLOSED
- PUSH BUTTON WITH MUSHROOM HEAD, EMERGENCY STOP, MOMENTARY CONTACT

INPUT SWITCHES

LIQUID LEVEL ACTIVATED SWITCH
- OPENS ON RISING LEVEL
- CLOSES ON RISING LEVEL

PRESSURE OR VACUUM ACTIVATED SWITCH
- OPENS ON RISING PRESSURE
- CLOSES ON RISING PRESSURE

TEMPERATURE ACTIVATED SWITCH
- OPENS ON RISING TEMPERATURE
- CLOSES ON RISING TEMPERATURE

FLOW ACTIVATED SWITCH
- OPENS ON INCREASE IN FLOW
- CLOSES ON INCREASE IN FLOW

LIMIIT SWITCH DIRECTLY ACTIVATED, SPRING RETURN
- NORMALLY OPEN
- NORMALLY OPEN – HELD CLOSED
- NORMALLY CLOSED
- NORMALLY CLOSED – HELD OPEN

FOOT OPERATED SWITCH
- OPENS BY FOOT PRESSURE
- CLOSES BY FOOT PRESSURE

TIME DELAY SWITCH
- NORMALLY OPEN CONTACT CLOSES AFTER TIME DELAY WHEN COIL IS ENERGIZED, OPENS INSTANTANEOUSLY WHEN DE–ENERGIZED
- NORMALLY CLOSED CONTACT OPENS AFTER TIME DELAY WHEN COIL IS ENERGIZED, CLOSES INSTANTANEOUSLY WHEN DE–ENERGIZED
- NORMALLY OPEN CONTACT CLOSES INSTANTANEOUSLY WHEN COIL IS ENERGIZED, OPENS AFTER TIME DELAY WHEN DE–ENERGIZED
- NORMALLY CLOSED CONTACT OPENS INSTANTANEOUSLY WHEN COIL IS ENERGIZED, CLOSES AFTER TIME–DELAY WHEN DE–ENERGIZED

CONTROL RELAYS

CR 2 — FUNCTION — OPERATING COIL
- CR = CONTROL RELAY
- U = UNLATCH
- L = LATCH

OL — THERMAL OVERLOAD RELAY

CR2 CR2 (LINE) (LINE) — OUTPUT CONTACTS. LINE NUMBER OF RELAY COIL SHOWN (OPTIONAL)

TIMING RELAYS

TR 3 — OPERATING COIL

ON or OFF DELAY
RANGE:SEC/MIN
SET:SEC/MIN

NORMALLY OPEN	NORMALLY CLOSED	
TR3 OR TC (LINE)	TR3 OR TO (LINE)	DELAY ON COIL ENERGIZATION (ON DELAY)
TR3 OR TO (LINE)	TR3 OR TC (LINE)	DELAY ON COIL DE–ENERGIZATION (OFF DELAY)

CONTACTORS

ID, C — OPERATING COILS
- C = CONTACTOR, LIGHTING OR GENERAL USE
- F = FAST OR FORWARD
- M = MAIN OR LINE
- 1M = FIRST MAIN OR WYE
- 2M = SECOND MAIN OR DELTA
- R = RUN OR REVERSE
- S = SLOW OR START

ID, SIZE — MAIN CONTACTS

OUTPUT LOADS AND DEVICES

- MOTOR
- SPACE HEATER. WATTAGE SHOWN
- MAGNETIC COIL
- SV — SOLENOID
- ETM — HOUR METER (ELAPSED TIME)
- KIC — TIME CONTROLLER

INDICATING LIGHTS

INDICATING LIGHTS

L = LENS COLOR:
- A = AMBER
- B = BLUE
- G = GREEN
- R = RED
- W = WHITE

L, LINE — PUSH TO TEST. TEST VOLTAGE TERMINAL SHOWN

TRANSFORMERS

480V / 120V — CONTROL TRANSFORMER. PRIMARY AND SECONDARY VOLTAGES SHOWN. SIZE AS SHOWN OR SPECIFIED.

50:5 — CURRENT TRANSFORMER. PRIMARY/ SECONDARY TURNS RATIO SHOWN. ■ INDICATED POLARITY

MISCELLANEOUS

- HORN
- 250 OHM RES — RESISTOR
- R — RESISTOR, 250 OHMS, ±0.1%, 1/2 WATT PRECISION
- RECTIFIER
- SURGE OR ARC SUPPRESSOR
- TRIAC
- KVAR — CAPACITOR
- CONNECTOR PLUG
- GROUND CONNECTION
- POTENTIOMETER
- BUS DUCT
- BATTERY
- OR — SHIELDED CABLE
- AC TERMINAL BLOCK
- DC TERMINAL BLOCK

ONE LINE DIAGRAM SYMBOLS

- POTHEAD
- STRESS CONE
- INCOMING LINE
- INDICATES THAT ALL OR PART OF CONDUIT MAY BE ROUTED IN DUCT BANK OR UNDERGROUND.
- SIGNAL
- PORTABLE CABLE
- BUS CONDUCTOR
- CABLE CONDUCTOR
- SURGE PROTECTOR
- LIGHTNING ARRESTOR AND GROUND
- TEST DEVICE
- SW — METERING SWITCH
- A, 0–1000 AMPS — METERS:
  - A = AMPERES
  - F = FREQUENCY
  - KW = KILOWATTS, DEMAND
  - PF = POWER FACTOR
  - V = VOLTS
  - VA = VOLT–AMPERES
  - VAR = VOLTAMPERES REACTIVE
  - WH = WATTHOURS
- XS — METER SWITCH
  - AS = AMMETER SWITCH
  - VS = VOLTMETER SWITCH
- RECEPTACLE/PLUG CONNECTION/BUS CONNECTION
- 5 — MOTOR, HORSEPOWER SHOWN
- 5 — HEATER, 5KW SIZE SHOWN
- 200A — DISCONNECT OR ISOLATING SWITCH. 200 AMP SHOWN

- 100F — FUSE. 100 AMP CLASS "F" SHOWN
- 100 KVA 13.2 KV / 5.75% Z 480/277 V — POWER TRANSFORMER. VOLTAGES, SIZE, IMPEDANCE SHOWN
- 1.5 KVA 120 V / 2.5% Z 240/120 V — ISOLATION TRANSFORMER. VOLTAGES, SIZE, IMPEDANCE SHOWN
- 3 — 4.16 KV / 120 V — POTENTIAL TRANSFORMER. PT QUANTITY (3), VOLTAGES, WYE–DELTA CONFIGURATION SHOWN
- 400:5, 3 — CURRENT TRANSFORMER. CT QUANTITY (3) AND 400:5 TURNS RATIO SHOWN. WINDING CONFIGURATIONS:
  - DELTA
  - WYE (GROUNDED)
- 600KW 60HZ — 480V 3ø, 4W PF 0.8 — GENERATOR. POWER RATING, FREQUENCY, VOLTAGE, POWER FACTOR, GROUNDED WYE WINDING SHOWN.
- GDR — 50 AMP/ 10 SEC — NEUTRAL GROUNDING RESISTOR. AMPS/TIME RATING SHOWN
- K — KIRK KEY INTERLOCK
- CIRCUIT BREAKER

MAIN CONTACTS

- M — AIR BREAK CONTACTOR
- M — VACUUM BREAK CONTACTOR

SYMBOL GENERAL NOTES:

1. THIS DRAWING IS GENERAL IN NATURE. SOME SYMBOLS SHOWN HEREON MAY NOT BE USED ON THE CONTRACT DRAWINGS.
2. SYMBOLS ARE ARRANGED ON SPECIFIC DRAWINGS AND IN CATEGORIES FOR CONVENIENCE ONLY; SYMBOLS MAY BE USED ON ANY OF THE CONTRACT DRAWINGS.
3. IDENTIFICATIONS (ID), SIZES, RATINGS, LOCATIONS AND SIMILAR INFORMATION SHOWN ASSOCIATED WITH SYMBOLS ARE OPTIONAL; EXAMPLES OF SUCH INFORMATION ARE SHOWN WITH SOME SYMBOLS FOR CLARITY.

FOR SAMPLE ONLY

RECORD DRAWINGS

REVISIONS DRAWN BY: XX DATE: XX/XX/XX

THESE RECORD DRAWINGS HAVE BEEN PREPARED, IN PART, ON THE BASIS OF INFORMATION COMPILED BY OTHERS. THEY ARE NOT INTENDED TO REPRESENT IN DETAIL THE EXACT LOCATION, TYPE OF COMPONENT NOR MANNER OF CONSTRUCTION. THE ENGINEER WILL NOT BE RESPONSIBLE FOR ANY ERRORS OR OMISSIONS WHICH HAVE BEEN INCORPORATED INTO THE RECORD DRAWINGS.

EXAMPLE

FOR SEALS AND SIGNATURES

(PROJECT NAME)
GENERAL
ELECTRICAL NOTES AND STANDARD SYMBOLS
DESCHUTES COUNTY, OREGON

REVISIONS:

(CONSULTANT ENGINEER NAME, ADDRESS & PHONE NUMBER)

DESIGNED BY:
DRAWN BY:
SCALE:
FILE:
DATE:

VERIFY SCALES
0 — 1"
BAR EQUALS ONE INCH ON ORIGINAL DRAWING

SHEET: G-006

COB # (XXXXXX)

GENERAL STRUCTURAL NOTES (GSN)

GENERAL

G1. SCOPE
THE NOTES ON THIS SHEET AND THE STANDARD STRUCTURAL DETAILS ARE GENERAL AND APPLY TO THE ENTIRE PROJECT WHETHER SPECIFICALLY CALLED OUT OR NOT, EXCEPT WHERE THERE ARE SPECIFIC INDICATIONS TO THE CONTRARY ON STRUCTURAL SHEETS. IF THERE ARE QUESTIONS, THEY SHALL BE SUBMITTED TO THE STRUCTURAL ENGINEER AND ANSWERED IN WRITING PRIOR TO CONSTRUCTION.

G2. APPLICABLE SPECIFICATIONS AND CODES
A. INTERNATIONAL BUILDING CODE, IBC 2012 WITH APPLICABLE EDITIONS OF THE CODE REFERENCED STANDARDS.
B. LOCAL JURISDICTION AMENDMENTS

G3. DESIGN CRITERIA
1. APPLIES TO ALL STRUCTURES (UNO)

A. DEAD LOAD:	
1. ACTUAL TRIBUTARY STRUCTURE WEIGHT	
2. SUPERIMPOSED DEAD LOAD:	X PSF
B. LIVE LOAD:	
1. ROOF:	XX PSF (NOT REDUCIBLE)
C. SNOW LOAD:	
1. GROUND SNOW LOAD:	XX PSF
2. FLAT ROOF SNOW LOAD:	XX PSF
3. EXPOSURE FACTOR C_e:	X.X
4. IMPORTANCE FACTOR I_s:	X.X
5. THERMAL FACTOR C_t:	X.X
D. SEISMIC:	
1. RISK CATEGORY:	X
2. IMPORTANCE FACTOR:	X
3. SPECTRAL RESPONSE ACCELERATION, S_s:	X.XXX
4. SPECTRAL RESPONSE ACCELERATION, S_1:	X.XXX
5. SITE CLASS:	X
6. SEISMIC DESIGN CATEGORY:	X
7. SPECTRAL RESPONSE COEFFICIENT, S_{DS}:	X.XX
8. SPECTRAL RESPONSE COEFFICIENT, S_{D1}:	X.XXX
9. BASIC SEISMIC FORCE RESISTING SYSTEM:	STEEL ORDINARY CANTILEVER COLUMN
10. ANALYSIS PROCEDURE:	EQUIVALENT LATERAL FORCE
11. RESPONSE MODIFICATION FACTOR R:	X.XX
12. SEISMIC RESPONSE COEFFICIENT C_s:	X.XXX
13. DESIGN BASE SHEAR V:	XX.XXXX
E. WIND:	
1. BASIC WIND SPEED:	XXX MPH
2. EXPOSURE:	C
3. ENCLOSURE:	OPEN

G4. GEOTECHNICAL DATA IS ASSUMED:
ALLOWABLE [NET] SOIL BEARING: XXXX PSF

G5. SAFETY
SAFETY AND STRUCTURE STABILITY DURING CONSTRUCTION ARE THE SOLE RESPONSIBILITY OF THE CONTRACTOR. STRUCTURES HAVE BEEN DESIGNED TO RESIST THE DESIGN LIVE LOADS ONLY AS A COMPLETED STRUCTURE.

G6. OPENINGS
OPENINGS FOR PIPES, DUCTS, CONDUITS, ETC. ARE NOT ALL SHOWN ON THE STRUCTURAL DRAWINGS. COORDINATE AND PROVIDE OPENINGS AS REQUIRED TO ACCOMMODATE ALL WORK SHOWN OR SPECIFIED IN THE CONTRACT DOCUMENTS AND OTHERWISE REQUIRED FOR THE FURNISHING OF A FUNCTIONALLY COMPLETE PROJECT. REINFORCE AROUND OPENINGS PER STANDARD STRUCTURAL DETAILS UNLESS OTHERWISE SHOWN.

G7. SPECIAL INSPECTIONS
SPECIAL INSPECTIONS ARE REQUIRED IN ACCORDANCE WITH CHAPTER 1 AND CHAPTER 17 OF THE IBC. PAYMENT FOR THESE INSPECTIONS IS NOT THE RESPONSIBILITY OF THE CONTRACTOR. THE CONTRACTOR SHALL PROVIDE FOR FULL ACCESS TO THE WORK BY THE SPECIAL INSPECTOR AND SHALL PROVIDE FOR THESE INSPECTIONS IN HIS CONSTRUCTION SCHEDULE IN ACCORDANCE WITH THE SPECIFICATIONS.

G8. STANDARD DETAILS:
THE STANDARD DETAILS DEPICT TYPICAL DETAILING TO BE USED ON THIS PROJECT. IF CONDITIONS ARE NOT EXPLICITLY SHOWN ON THE DRAWINGS THEY SHALL BE MADE SIMILAR TO THE STANDARD DETAILS. OBTAIN APPROVAL OF ENGINEER IN WRITING FOR SIMILAR CONDITIONS PRIOR TO CONSTRUCTION.

G9. EXISTING CONSTRUCTION:
THE CONTACTOR SHALL FIELD VERIFY ALL DIMENSIONS AND ELEVATIONS OF EXISTING CONSTRUCTION AS REQUIRED TO COORDINATE NEW CONSTRUCTION. SUBMIT REQUIRED CHANGES FOR APPROVAL.

G10. EQUIPMENT LOADING:
CONTRACTOR TO SUBMIT FOR REVIEW ALL EQUIPMENT SIZES, OPERATING WEIGHTS, VIBRATION FORCES, SUPPORT LOCATIONS, ALONG WITH ANY FLOOR OPENINGS, NOTCHES, AND RECESSES REQUIRED BY SUCH EQUIPMENT. CONCRETE SUPPORT PADS AND/OR FRAMING REQUIRED TO SUPPORT SAID EQUIPMENT SHALL NOT BE FABRICATED AND PLACED UNTIL THE CONCRETE SUPPORT PADS AND/OR FRAMING IS APPROVED TO SUPPORT THE EQUIPMENT.

CONCRETE

C1. DESIGN STRENGTHS:
F'c = 4500 PSI
Fy = 60,000 PSI

C2. CONCRETE COVER
UNLESS OTHERWISE NOTED, PROVIDE CONCRETE COVER FOR REINFORCING AS FOLLOWS:

CONCRETE DEPOSITED AGAINST EARTH:	3"
ALL OTHER:	2"

SEE DRAWINGS FOR EXCEPTIONS

C3. SEE SPECIFICATIONS FOR REINFORCING PLACEMENT REQUIREMENTS.

C4. REFER TO OTHER DISCIPLINE DRAWINGS PRIOR TO CONSTRUCTION FOR EMBEDDED ITEMS AND PENETRATIONS NOT SHOWN ON STRUCTURAL DRAWINGS.. AS REQUIRED TO ACCOMMODATE ALL WORK SHOWN OR SPECIFIED IN THE CONTRACT DOCUMENTS AND OTHERWISE REQUIRED FOR THE FURNISHING OF A FUNCTIONALLY COMPLETE PROJECT. REINFORCE AROUND OPENINGS PER STANDARD STRUCTURAL DETAILS UNLESS OTHERWISE SHOWN.

CONCRETE (continued)

C5. PROVIDE 3/4" CHAMFERS AT ALL EXPOSED EDGES NOT ALL CHAMFERS MAY BE SHOWN ON DRAWINGS.

C6. FIELD ADJUST REINFORCING AT OPENINGS AND EMBEDDED ITEMS AS INDICATED.

C7. ANCHOR BOLTS NOT SPECIFIED BY ENGINEER SHALL BE DESIGNED AND CERTIFIED BY A REGISTERED PROFESSIONAL ENGINEER, RETAINED BY THE CONTRACTOR, IN ACCORDANCE WITH APPLICABLE PROJECT AND CODE REQUIREMENTS. SUBMIT AS A SHOP DRAWING FOR REVIEW AND APPROVAL BY THE ENGINEER. COORDINATE LOCATION, SIZE AND EMBEDMENT PRIOR TO CASTING CONCRETE.

C8. ABSOLUTELY NO WELDING OF REINFORCING BARS OR TORCHING TO BEND REINFORCING BARS SHALL BE ALLOWED WITHOUT SPECIFIC APPROVAL FROM THE STRUCTURAL ENGINEER.

C9. ALL CAST IN PLACE AND POST-INSTALLED ANCHORS INDICATED IN THE STRUCTURAL DOCUMENTS SHALL COMPLY WITH APPENDIX D OF ACI 318 AND CHAPTER 19 OF THE IBC. ALL EXPANSION AND ADHESIVE ANCHORS SHALL HAVE THE ICC REPORT SHOWING EQUIVALENT LOAD CAPACITY. SUBMIT AND INSTALL PER THE ICC EVALUATION REPORT.

STEEL

S1. DESIGN STRENGTHS:
HSS SECTIONS: Fy=46 KSI
ALL OTHER PLATES AND SHAPES: Fy=36 KSI

S2. DIMENSIONS:
TO CENTERLINES OF COLUMNS AND BEAMS, TOP SURFACES OF BEAMS AND TUBES AND BACKS OF CHANNELS AND ANGLES UNO.

S3. ELEVATIONS:
TOP OF STEEL REFERS TO TOP SURFACE OF MEMBER OR FLANGE UNO.

S4. FILLET WELDS:
WHEN FILLET WELD SIZE IS NOT INDICATED, PROVIDE MAXIMUM WELD SIZE BASED ON MATERIAL THICKNESS IN ACCORDANCE WITH AISC SPECIFICATIONS.

S5. BOLTED CONNECTIONS:
ALL BOLTED STRUCTURAL CONNECTIONS ARE BEARING TYPE CONNECTIONS UNLESS OTHERWISE SPECIFIED TO BE SLIP-CRITICAL. PROVIDE LOAD INDICATING WASHERS AT SLIP-CRITICAL CONNECTIONS.

S6. STEEL MANUAL:
CONFORM TO AISC 360, STEEL CONSTRUCTION MANUAL AND AISC 341, SEISMIC DESIGN MANUAL.

STEEL DECK:

SD1. THE DESIGN, FABRICATION, AND ERECTION OF METAL DECKING SHALL BE IN ACCORDANCE WITH THE CURRENT EDITION OF THE SDI SPECIFICATIONS AND THE SDI DIAPHRAGM MANUAL

SD2. STEEL ROOF DECK IS 1-1/2 INCH X 18 GAUGE DESIGNED FOR THE DEAD, SNOW AND LIVE LOADS INDICATED.

SD3. STEEL ROOF DECK IS TO BE A STRUCTURAL DIAPHRAGM AND SHALL BE CONNECTED TO THE STRUCTURE AS INDICATED IN THE METAL DECK SCHEDULE.

SD4. THE PLANS INDICATE DECK SPAN DIRECTION.

SD5. SUSPENDED CEILINGS, LIGHT FIXTURES, DUCTS, AND OTHER UTILITIES SHALL NOT BE SUPPORTED FROM THE STEEL DECK.

FINISHES:

F1. _____COLOR OF ROOF.

F2. _____COLOR OF SUPPORT STEEL.

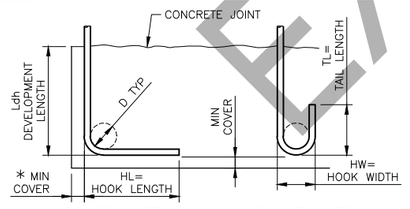

90 DEG STD HOOK 180 DEG STD HOOK

BAR SIZE GRADE 60	HL	HW	TL	D	f'c=4.0 OR 4.5 KSI Ldh *
#3	6"	3"	3"	2 1/4"	6"
#4	8"	4"	4 1/2"	3"	7"
#5	10"	5"	5"	3 3/4"	9"
#6	1'-0"	6"	6"	4 1/2"	10"
#7	1'-2"	7"	7"	5 1/4"	12"
#8	1'-4"	8"	8"	6"	14"
#9	1'-7"	11 3/4"	10 1/2"	9 1/2"	15"
#10	1'-10"	1'-1 1/4"	11 1/2"	10 3/4"	17"
#11	2'-0"	1'-2 3/4"	1'-1"	12"	19"

* COMPLYING WITH MINIMUM COVER REQUIREMENTS OF ACI 318, 12.5.3. OTHERWISE Ldh MUST BE RE-CALCULATED.

1 REINFORCING HOOK SCHEDULE
1"=1'-0"

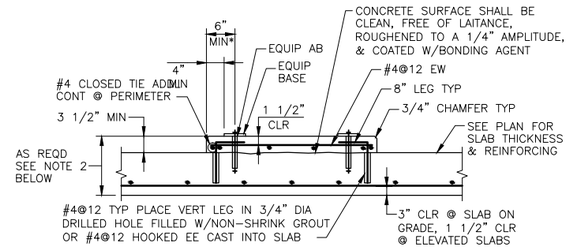

NOTES:

1. PROVIDE ABOVE PAD UNDER ALL STATIC, NON-VIBRATING ELECTRICAL AND MECHANICAL EQUIPMENT SUPPORTED ON STRUCTURAL SLABS. ALSO PROVIDE FOR EQUIPMENT WEIGHING LESS THAN 5000 POUNDS WHICH ARE SUPPORTED ON GRADE OR WHERE SPECIFICALLY NOTED ON PLANS. STRUCTURAL ENGINEER TO REVIEW AND PROVIDE PROJECT SPECIFIC DESIGN FOR ALL EQUIPMENT PADS.

2. PAD THICKNESS SHALL BE THE LARGER OF SLAB THICKNESS PLUS 3 1/2" OR MINIMUM PAD THICKNESS FROM TABLE. PROVIDE AN ADDITIONAL LAYER OF #4@12 EACH WAY WITH 1 1/2" CLEAR TOP AND BOTTOM FOR EACH 8" ADDITIONAL PAD THICKNESS EXCEEDING THE 3 1/2" MINIMUM THICKNESS. ALTERNATIVELY, THICKEN SLAB ON GRADE BELOW EQUIPMENT PAD AS REQD TO MAINTAIN MIN 3" COVER ON ANCHOR BOLTS.

MINIMUM PAD THICKNESS TABLE	
AB DIA	MIN PAD THK
1/4" DIA	5"
3/8" DIA	6 1/2"
1/2" DIA	8"
5/8" DIA	9 1/2"
3/4" DIA	11"
7/8" DIA	12 1/2"
1" DIA	14"

PAD NOTES:

1. ABOVE PAD DETAILS APPLY FOR SUPPORT OF STATIC, NON-VIBRATING EQUIPMENT UNLESS INDICATED OTHERWISE ON THE DRAWINGS. STRUCTURAL ENGINEER TO REVIEW AND PROVIDE PROJECT SPECIFIC DESIGN FOR EQUIPMENT PADS.

2. BEFORE EQUIPMENT SUPPORT PADS ARE CAST, THE PAD SIZES AND REINFORCING SHALL BE APPROVED BY THE ENGINEER AS BEING CAPABLE OF SUPPORTING EQUIPMENT TO BE PLACED THEREON. EQUIPMENT BASE DIMENSIONS SHALL BE THE LARGER OF AS DETERMINED BY THE EQUIPMENT MANUFACTURER OR AS INDICATED ON THE DRAWINGS. SUBMIT ALL EQUIPMENT DIMENSIONS AND LOADS TO ENGINEER. THE SIZE, NUMBER, TYPE, LOCATION AND THREAD PROJECTION OF THE ANCHOR BOLTS (AB) SHALL BE AS DETERMINED BY THE EQUIPMENT MANUFACTURER AND SHALL BE AS APPROVED BY THE ENGINEER. AB SHALL BE HELD IN POSITION WITH A TEMPLATE WHILE EQUIPMENT PAD IS CAST.

*3. 6" MINIMUM PAD EDGE DIMENSION TO EQUIPMENT AB APPLIES FOR ALL EQUIPMENT SUPPORT PADS.

2 TYPICAL EQUIPMENT SUPPORT PAD
N.T.S.

LAP SPLICE AND EMBEDMENT LENGTHS f'c =4.0 ksi fy = 60 ksi f'c =4.5 ksi		
BAR	BARS SPACED GREATER THAN 4"	BARS SPACED LESS THAN OR EQUAL TO 4"
#3	14"	20"
#4	19"	32"
#5	29"	46"
#6	39"	62"
#7	55"	87"
#8	69"	107"
#9	76"	116"
#10	97"	140"
#11	120"	146"

NOTES:

1. PROVIDE MINIMUM LAP SPLICE LENGTHS AND EMBEDMENTS PER TABLE UNLESS NOTED OTHERWISE. EMBEDMENT LENGTH EQUALS THE LAP SPLICE LENGTH UNLESS OTHERWISE NOTED.

2. BAR SPACING AT LAP SPLICE IS THE MINIMUM CLEAR DISTANCE BETWEEN LAPPED BARS PLUS ONE BAR DIAMETER.

3. ALL SPLICES TO BE CONTACT SPLICES AND WIRED TOGETHER UNLESS OTHERWISE APPROVED BY ENGINEER.

3 CONCRETE REINFORCING LAP AND EMBEDMENT SCHEDULE
N.T.S.

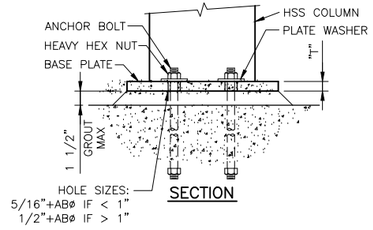

SECTION

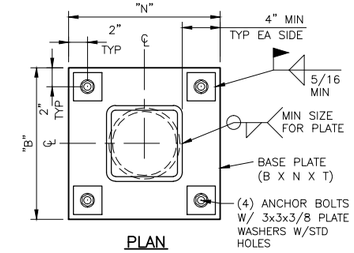

PLAN

4 COLUMN BASE PLATE
N.T.S.

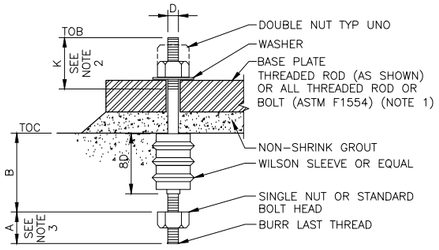

SCHEDULE-ANCHOR BOLT TYPE A				
D	A	B	K	REMARKS
3/8"	1"	6"	2 3/4"	
1/2"	1 1/4"	8"	3"	
5/8"	1 1/2"	10"	3 1/4"	
3/4"	1 3/4"	12"	3 1/2"	
7/8"	2"	14"	3 3/4"	
1"	2 1/4"	16"	4"	
1 1/8"	2 1/2"	18"	4 1/4"	
1 1/4"	2 3/4"	20"	4 1/2"	
1 3/8"	3"	22"	4 3/4"	
1 1/2"	3 1/4"	24"	5"	
1 3/4"	3 3/4"	28"	5 1/2"	
2"	4 1/4"	32"	6"	
2 1/2"	5 1/2"	48"	7"	
3"	6 1/4"	66"	8"	

NOTES:

1. PROVIDE SST ANCHOR BOLTS WHERE INDICATED IN SECTIONS AND DETAILS.
2. STANDARD BOLT THREAD LENGTH MAY BE USED WHERE APPLICABLE.
3. DIMENSION IN SCHEDULE OR STANDARD BOLT HEAD.

5 ANCHOR BOLT DETAIL
N.T.S.

EXAMPLE

FOR SAMPLE ONLY

RECORD DRAWINGS

REVISIONS DRAWN BY: XX DATE: XX/XX/XX

THESE RECORD DRAWINGS HAVE BEEN PREPARED, IN PART, ON THE BASIS OF INFORMATION COMPILED BY OTHERS. THEY ARE NOT INTENDED TO REPRESENT IN DETAIL THE EXACT LOCATION, TYPE OF COMPONENT NOR MANNER OF CONSTRUCTION. THE ENGINEER WILL NOT BE RESPONSIBLE FOR ANY ERRORS OR OMISSIONS WHICH HAVE BEEN INCORPORATED INTO THE RECORD DRAWINGS.

FOR SEALS AND SIGNATURES

(PROJECT NAME)
GENERAL
GENERAL STRUCTURAL NOTES
DESCHUTES COUNTY, OREGON

REVISIONS:

(CONSULTANT ENGINEER NAME, ADDRESS & PHONE NUMBER)

DESIGNED BY:
DRAWN BY:
SCALE:
FILE:
DATE:

VERIFY SCALES
0 1"
BAR EQUALS ONE INCH ON ORIGINAL DRAWING

SHEET: G-007

COB # (XXXXXX)

WASTEWATER PUMP STATION AND FORCE MAIN DESIGN DATA SUMMARY TABLE 1

BASIN CHARACTERISTICS	
LOCAITON	ADDRESS AND CROSS STREET
BASIN AREA	XXX ACRES
EQUIVALENT DWELLING UNITS (EDU) PER ACRE	X.X
PERSON PER EDU	X.X
POPULATION EQUIVALENT	XXXX
AVERAGE PER CAPITA FLOW	XX GPD
INFILTRATION AND INFLOW, PEAK WET WEATHER FLOW (PWWF)	XXX,XXX GPD
AVERAGE DAILY FLOW	XXX,XXX GPD
PEAK HOURLY FLOW	XXX GPM
PUMP STATION	
TYPE	DUPLEX SUBMERSIBLE, NON-CLOG, VARIABLE SPEED PUMPS
CAPACITY (PER PUMP)	XXX GPM @ XX FEET TDH (STATIC HEAD = XX FT)
HORSEPOWER, HP	XX HP EACH WITH VARIABLE FREQUENCY DRIVES
MOTOR DATA	Xxx VOLT X PHASE XX CYCLE
FIRM CAPACITY OF PUMP STATION	X.XX MGD (XXX GPM)
MAXIMUM PUMP STARTS PER HOUR	X – SEE NOTE 4
WET WELL VOLUME	XXXX GALLONS (PUMPS OFF TO LEAD PUMP)
LEVEL CONTROL TYPE	PRESSURE SENSORS LEVEL CONTROL
OVERFLOW POINT	MANHOLE NUMBER AND ELEVATION
OVERFLOW LOCATION	DESCRIPTION
AVERAGE TIME TO OVERFLOW	TIME AND DESCRIPTION, XX HOURS AT XX GPM DESIGN AVERAGE INFLUENT FLOW – SEE NOTE 1
TELEMETRY	BY CITY
TRANSFER SWITCH	AUTOMATIC
STANDBY POWER TYPE	XXX kW STATIONARY DIESEL POWERED STANDBY GENERATOR
FUEL TANK CAPACITY	XX HRS/DAYS (XXX GALLONS)
EPA RELIABILITY CLASS	1
FLOW METER	"X" MAGNETIC (DESCRIPTION)
CONTROL	CONSTANT SPEED OR VFD – PER CITY APPROVAL
FORCE MAIN	
TYPE AND LENGTH	XXXX FEET, TYPE
FORCEMAIN VELOCITY	X.X FEET PER SECOND
PROFILE	DESCRIPTION
AIR RELEASE VALVE	QUANTITY, DESCRIPTION
DISCHARGE LOCATION	MANHOLE NUMBER AND ELEVATION
AVERAGE DETENTION TIME	XX HOURS
ODOR CONTROL SYSTEM	DESCRIPTION
OPERATING LEVELS	
GROUND ELEVATION	XXXX.XX
OVERFLOW ALARM ELEVATION	FLOAT CONTROL SYSTEM? (BACKUP)
LAG PUMP ON/HIGH WATER ALARM ELEVATION XXXX.XX	PRESSURE PROBE (PROVIDE DISTANCE FROM WET WELL FLOOR IN FEET) SAME AS LEVEL INDICATOR DIGITAL DISPLAY
LEAD PUMP ON ELEVATION XXXX.XX	PRESSURE PROBE (PROVIDE DISTANCE FROM WET WELL FLOOR IN FEET) SAME AS LEVEL INDICATOR DIGITAL DISPLAY
ALL PUMPS OFF ELEVATION XXXX.XX	PRESSURE PROBE (PROVIDE DISTANCE FROM WET WELL FLOOR IN FEET) SAME AS LEVEL INDICATOR DIGITAL DISPLAY
WETWELL FLOOR ELEVATION XXXX.XX	PRESSURE PROBE (0.00 FEET)
LANDSCAPING	
LANDSCAPING AREA	SQUARE FEET AND DESCRIPTION
IRRIGATION SYSTEM	TYPE
CONTROL VALVES	NUMBER AND TYPE
BACKFLOW DEVICE	SIZE AND TYPE

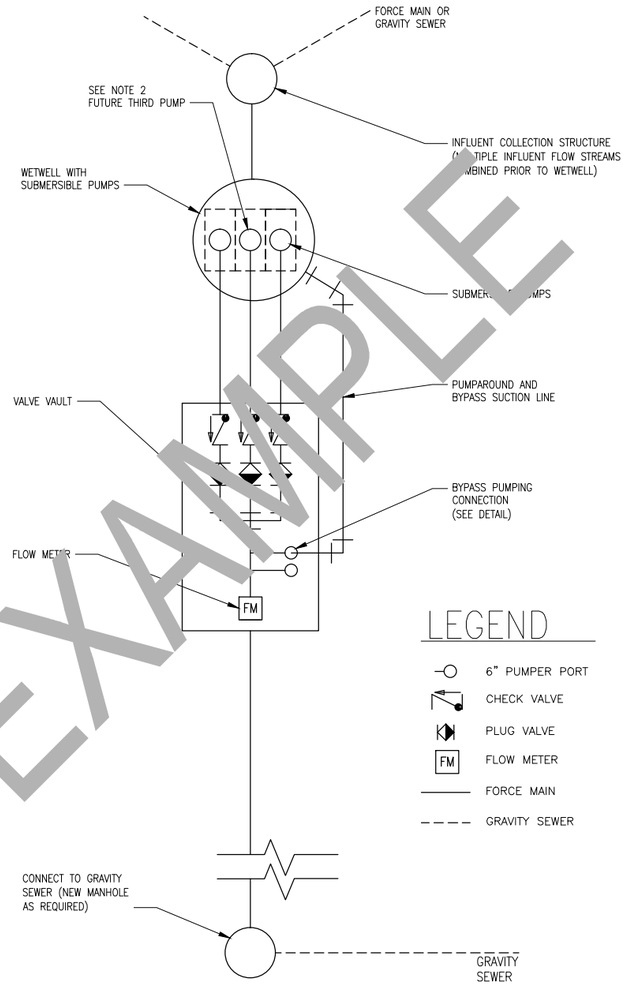

PUMP STATION SCHEMATIC

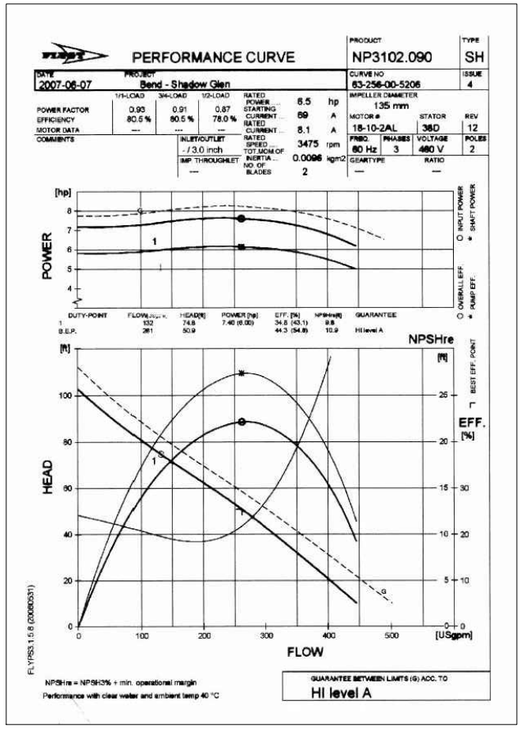

EXAMPLE PUMP PERFORMANCE CURVE

PUMP STATION SCHEMATIC

1. DESIGN ENGINEER TO FILL IN DESIGN INFORMATION IN THE TABLE FOR APPROVAL BY CITY OF BEND. PUMP STATION WETWELL SHALL CONFORM TO ANSI/HYDRAULIC INSTITUTE STANDARD 9.8.
2. RESERVED FOR FUTURE THIRD PUMP IN PUMP STATION.
3. PUMP SELECTION DESIGN POINT SHALL CONFORM TO HYDRAULIC INSTITUTE STANDARDS 9.6.3
4. PUMP STATION WETWELL STORAGE VOLUME PER HYDRAULIC INSTITUTE STANDARD 9.8 BASED ON THE MAXIMUM PUMP CYCLE TIME, LESS THAN EIGHT (8) STARTS PER HOUR.

FOR SAMPLE ONLY

RECORD DRAWINGS

REVISIONS DRAWN BY: XX DATE: XX/XX/XX

THESE RECORD DRAWINGS HAVE BEEN PREPARED, IN PART, ON THE BASIS OF INFORMATION COMPILED BY OTHERS. THEY ARE NOT INTENDED TO REPRESENT IN DETAIL THE EXACT LOCATION, TYPE OF COMPONENT NOR MANNER OF CONSTRUCTION. THE ENGINEER WILL NOT BE RESPONSIBLE FOR ANY ERRORS OR OMISSIONS WHICH HAVE BEEN INCORPORATED INTO THE RECORD DRAWINGS.

EXAMPLE

FOR SEALS AND SIGNATURES

(PROJECT NAME)
GENERAL
BASIS OF DESIGN
DESCHUTES COUNTY, OREGON

REVISIONS:

(CONSULTANT ENGINEER NAME, ADDRESS & PHONE NUMBER)

DESIGNED BY:
DRAWN BY:
SCALE:
FILE:
DATE:

VERIFY SCALES
0 1"
BAR EQUALS ONE INCH ON ORIGINAL DRAWING

SHEET: G-008

COB # (XXXXXX)

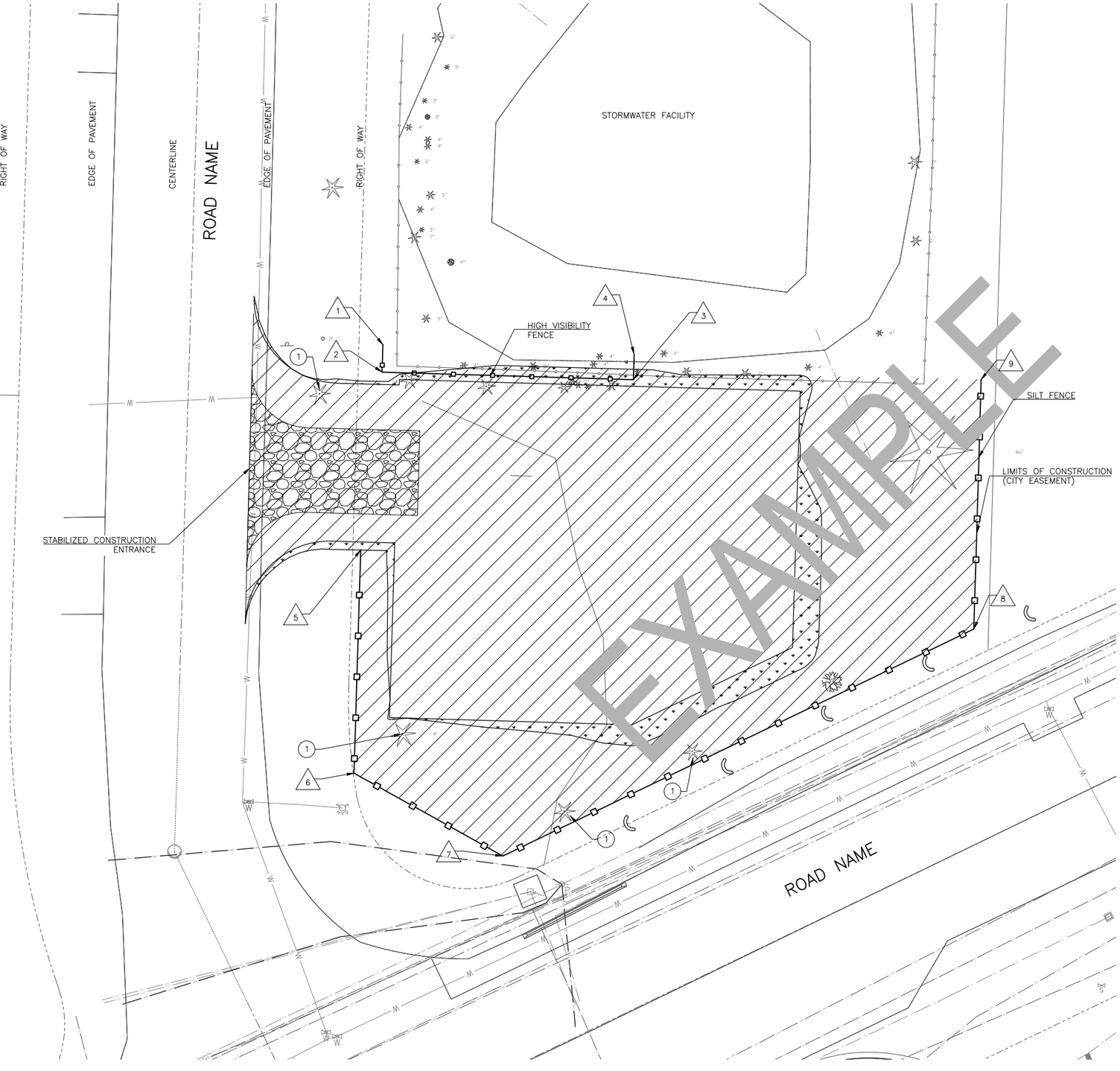

EXAMPLE

N

10 05 0 10 20

SCALE IN FEET

GENERAL NOTES:

1. HIGH VISIBILITY FENCE SHALL BE INSTALLED AROUND THE DRIP LINES OF TREES TO BE RETAINED ON SITE. FENCING SHALL BE INSTALLED FOLLOWING THE FELLING OF TREES TO BE REMOVED, AND PRIOR TO ANY LARGE EQUIPMENT ENTERING THE PROPERTY.
2. EROSION CONTROL MEASURES SHALL COMPLY WITH CURRENT CITY OF BEND STORM WATER DESIGN MANUAL.

KEY NOTES:

(1) REMOVE EXISTING TREE

POINT TABLE			
#	NORTHING	EASTING	DESCRIPTION
1	633925.41	79082.06	BEGIN HIGH VISIBILITY FENCE

EXAMPLE

FOR SAMPLE ONLY

RECORD DRAWINGS

REVISIONS DRAWN BY: XX DATE: XX/XX/XX

THESE RECORD DRAWINGS HAVE BEEN PREPARED, IN PART, ON THE BASIS OF INFORMATION COMPILED BY OTHERS. THEY ARE NOT INTENDED TO REPRESENT IN DETAIL THE EXACT LOCATION, TYPE OF COMPONENT NOR MANNER OF CONSTRUCTION. THE ENGINEER WILL NOT BE RESPONSIBLE FOR ANY ERRORS OR OMISSIONS WHICH HAVE BEEN INCORPORATED INTO THE RECORD DRAWINGS.

FOR SEALS AND SIGNATURES

(PROJECT NAME) CIVIL

DEMOLITION AND EROSION CONTROL PLAN

DESCHUTES COUNTY, OREGON

REVISIONS:

(CONSULTANT ENGINEER NAME, ADDRESS & PHONE NUMBER)

DESIGNED BY:
DRAWN BY:
SCALE:
FILE:
DATE:

VERIFY SCALES

0 1"

BAR EQUALS ONE INCH ON ORIGINAL DRAWING

SHEET: C-001

COB # (XXXXXX)

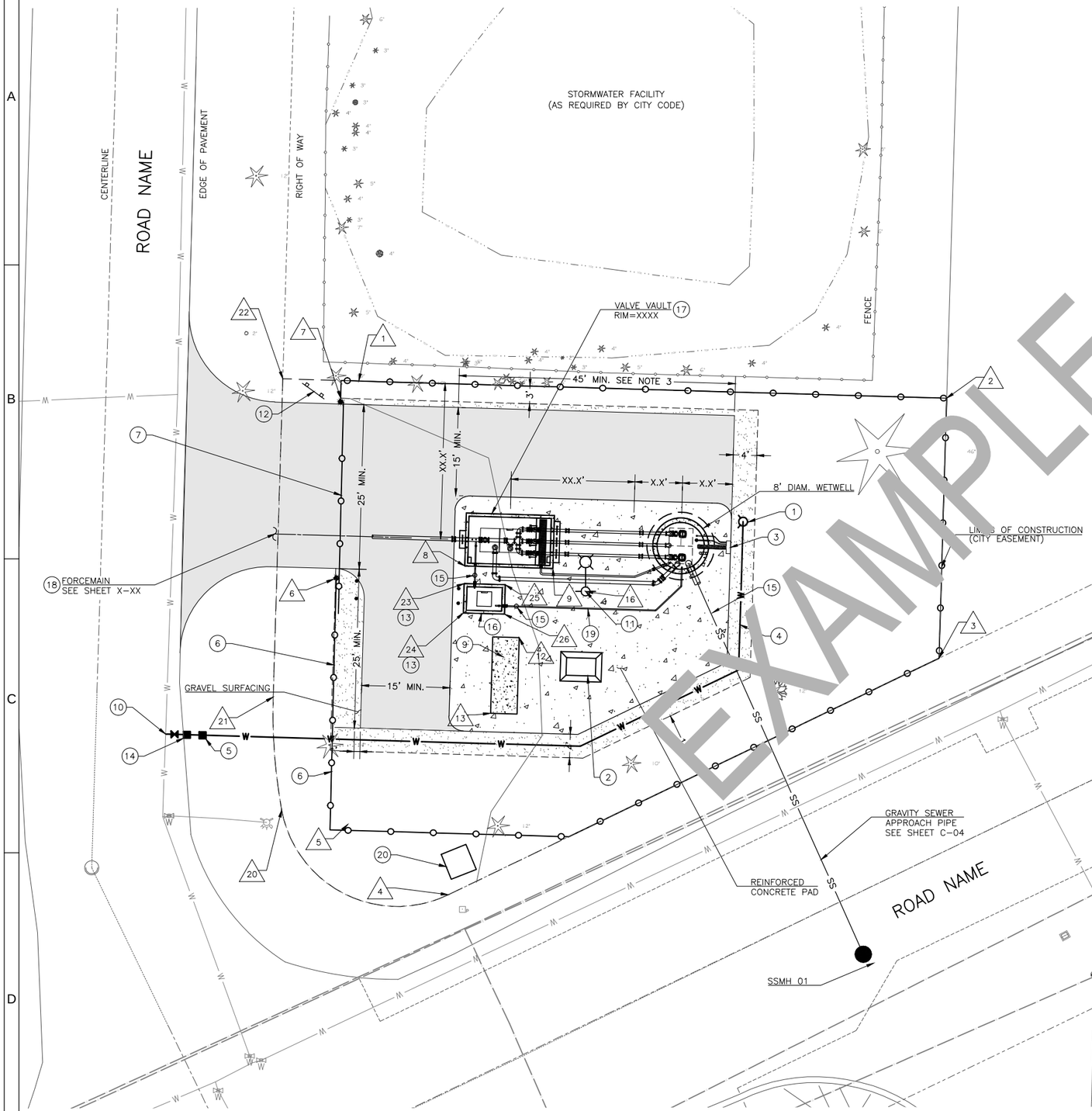

POINT TABLE			
#	NORTHING	EASTING	DESCRIPTION
1	633922.15	79088.07	FENCE
2	633919.22	79188.12	FENCE / EASEMENT AP
3	633875.01	79186.83	FENCE / EASEMENT AP
4	633834.76	79103.32	FENCE / EASEMENT PC
5	633846.73	79086.21	FENCE
6	633888.55	79087.24	FENCE / SLIDE GATE
7	633918.54	79087.98	FENCE / SLIDE GATE
8	633890.69	79106.11	VALVE VAULT
9	633890.25	79121.10	VALVE VAULT
12	633880.50	79115.45	GENERATOR PAD
13	633867.51	79115.0[illegible]	GENERATOR PAD
16	633886.36	79126.67	SITE LIGHTING
20	633849.21	79074.[illegible]	EASEMENT PCC
21	633868.41	790[illegible]	EASEMENT PT
22	633922.53	79[illegible]75.14	EASEMENT AP
23	633[illegible]	[illegible]106.19	BOLLARD
24	633885.19	79106.12	BOLLARD
25	633[illegible]87.57	79110.19	ODOR CONTROL STATION
26	633[illegible]3.07	79110.11	ODOR CONTROL STATION

N

10 05 0 10 20

SCALE IN FEET

GENERAL NOTES:

1. SEE CITY OF BEND STANDARD DETAIL FOR LIFT STATION AIR AND VACUUM RELEASE.
2. SEE CITY OF BEND STANDARD DETAIL FOR STANDARD VALVE BOX INSTALLATION.
3. DIMENSION SHOWN FOR CITY MAINTENANCE AND TRACTOR TRUCK ACCESS, ANY SITE VARIATION TO ACCESS MUST BE REVIEWED AND APPROVED BY THE CITY UTILITY DEPARTMENT.

KEY NOTES:

(1) NON-FREEZE TYPE WASH HYDRANT.
(2) CONTROL PANEL PER NFPA 820.
(3) ISOLATION PEDESTAL.
(4) 2" POLYETHYLENE PIPE CLASS 200.
(5) REDUCED PRESSURE BACK FLOW ASSEMBLY.
(6) COATED CHAIN LINK FENCE.
(7) AUTOMATIC 30' SLIDE GATE, VINYL COATED.
(8) NOTE NOT USED
(9) GENERATOR ON CONCRETE PAD (PROVIDE STRUCTURAL DESIGN).
(10) CONNECT TO EXISTING WATER MAIN.
(11) LIFT STATION SITE LIGHT.
(12) CITY SIGN, SEE DETAIL (8).
(13) BOLLARD TYPE 1.
(14) 2" WATER SERVICE WITH 2" BALL VALVE (NO METER).
(15) CITY OF BEND VALVE BOX.
(16) 6'-0" x 4'-0" CONTAINMENT FOR ODOR CONTROL STATION TO BE COORDINATED AS NEEDED BY CITY OF BEND UTILITY DEPARTMENT.
(17) SEE VALVE VAULT DETAILS SHEET M-101.
(18) ROUTE TO EXISTING FORCE MAIN.
(19) 4" SCHEDULE 80 PVC.
(20) POWER VAULT TO BE INSTALLED BY XXX.

EXAMPLE

FOR SAMPLE ONLY

RECORD DRAWINGS

REVISIONS DRAWN BY: XX DATE: XX/XX/XX

THESE RECORD DRAWINGS HAVE BEEN PREPARED, IN PART, ON THE BASIS OF INFORMATION COMPILED BY OTHERS. THEY ARE NOT INTENDED TO REPRESENT IN DETAIL THE EXACT LOCATION, TYPE OF COMPONENT NOR MANNER OF CONSTRUCTION. THE ENGINEER WILL NOT BE RESPONSIBLE FOR ANY ERRORS OR OMISSIONS WHICH HAVE BEEN INCORPORATED INTO THE RECORD DRAWINGS.

FOR SEALS AND SIGNATURES

(PROJECT NAME)
CIVIL

SITE PLAN

DESCHUTES COUNTY, OREGON

REVISIONS:

(CONSULTANT ENGINEER NAME, ADDRESS & PHONE NUMBER)

DESIGNED BY:
DRAWN BY:
SCALE:
FILE:
DATE:

VERIFY SCALES
0 1"
BAR EQUALS ONE INCH ON ORIGINAL DRAWING

SHEET:
C-002

COB # (XXXXXX)

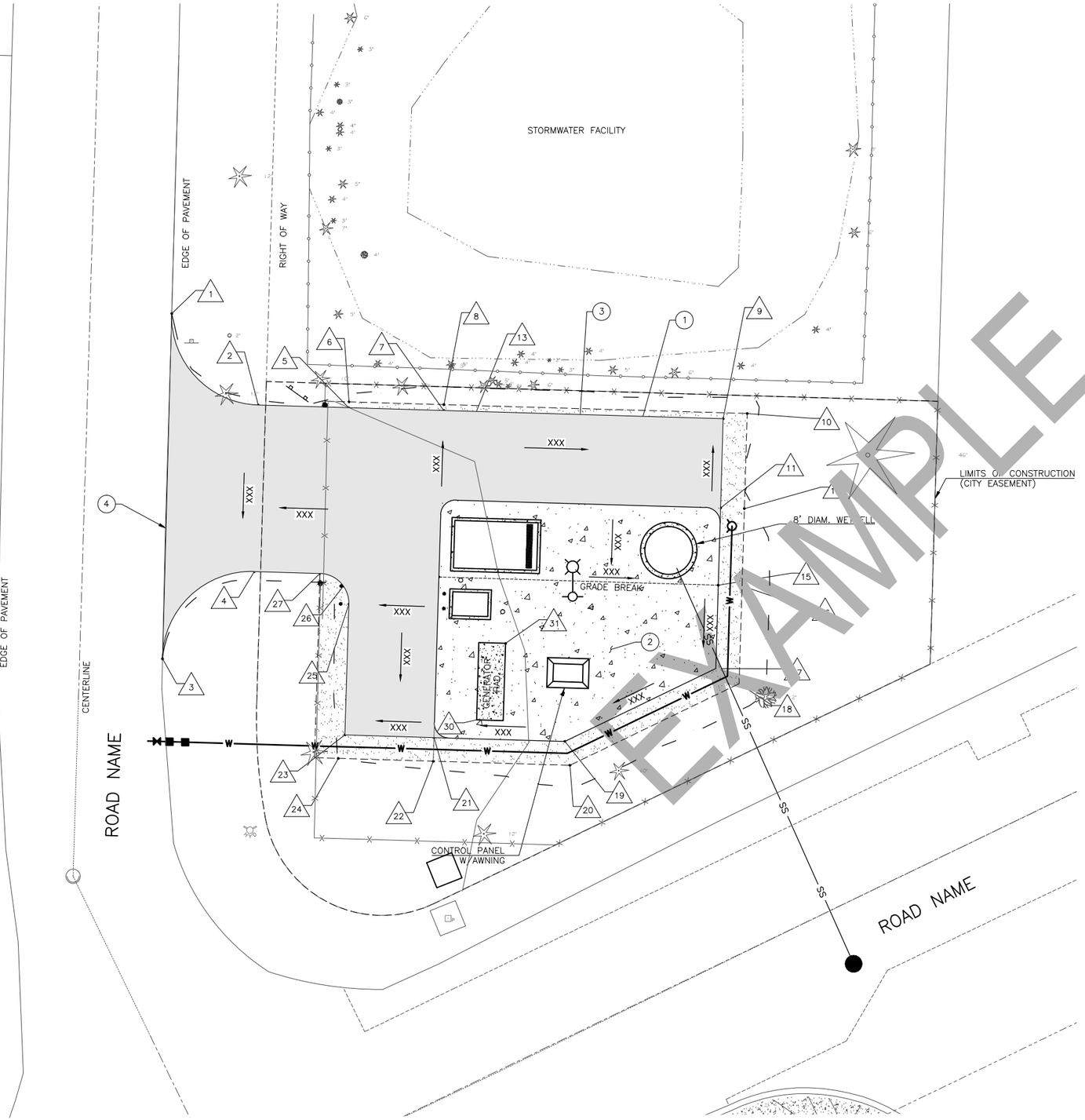

EXAMPLE

N

10 05 0 10 20

SCALE IN FEET

KEY NOTES:

1. COMMERCIAL HMA
2. REINFORCED CONCRETE PAD.
3. GRAVEL SURFACING SECTION.
4. SAWCUT EXISTING ASPHALT CONC. PAVEMENT. TACKCOAT PER ODOT STANDARD.

POINT TABLE			
#	NORTHING	EASTING	DESCRIPTION
1	633933.96	79059.23	BEGIN ASPHALT
2	633918.57	79073.79	PT, ASPHALT
3	633875.90	79057.68	END ASPHALT
4	633890.57	79073.11	PC, ASPHALT
5	633918.13	79089.01	BEGIN GRAVEL
6	633919.12	79089.04	AP, GRAVEL
7	633917.65	79104.99	GRADE BREAK, CONCRETE & GRAVEL
8	633918.65	79105.02	GRADE BREAK, GRAVEL
9	633916.28	79152.00	AP, CONCRETE & GRAVEL
10	633917.16	79156.04	AP, GRAVEL
11	633901.28	79151.56	AP, CONCRETE
12	633901.16	79155.56	GRADE BREAK, GRAVEL
13	633902.66	79104.55	AP, CONCRETE
14	633889.67	79104.16	GRADE BREAK, CONCRETE
15	633888.29	79151.18	GRADE BREAK, CONCRETE
16	633888.17	79155.17	GRADE BREAK, GRAVEL
17	633874.27	79150.75	AP, CONCRETE & GRAVEL
18	633871.73	79154.68	AP, GRAVEL
19	633862.03	79125.36	AP, CONCRETE & GRAVEL
20	633858.01	79126.22	AP, GRAVEL
21	633862.68	79103.35	AP, CONCRETE
22	633858.68	79103.23	GRADE BREAK, GRAVEL
23	633863.12	79088.36	AP, CONCRETE & GRAVEL
24	633859.15	79087.24	AP, GRAVEL
25	633885.10	79089.02	PC, ASPHALT & GRAVEL
26	633888.14	79088.11	END GRAVEL
27	633890.25	79084.17	PT, ASPHALT
28	633894.97	79113.74	VALVE VAULT
29	633894.24	79142.88	WETWELL
30	633867.64	79110.57	GENERATOR PAD
31	633880.50	79115.45	GENERATOR PAD

FOR SAMPLE ONLY

RECORD DRAWINGS

REVISIONS DRAWN BY: XX DATE: XX/XX/XX

THESE RECORD DRAWINGS HAVE BEEN PREPARED, IN PART, ON THE BASIS OF INFORMATION COMPILED BY OTHERS. THEY ARE NOT INTENDED TO REPRESENT IN DETAIL THE EXACT LOCATION, TYPE OF COMPONENT NOR MANNER OF CONSTRUCTION. THE ENGINEER WILL NOT BE RESPONSIBLE FOR ANY ERRORS OR OMISSIONS WHICH HAVE BEEN INCORPORATED INTO THE RECORD DRAWINGS.

FOR SEALS AND SIGNATURES

(PROJECT NAME) CIVIL

GRADING AND DRAINAGE PLAN

DESCHUTES COUNTY, OREGON

REVISIONS:

(CONSULTANT ENGINEER NAME, ADDRESS & PHONE NUMBER)

DESIGNED BY:
DRAWN BY:
SCALE:
FILE:
DATE:

VERIFY SCALES

0 1"

BAR EQUALS ONE INCH ON ORIGINAL DRAWING

SHEET: C-003

COB # (XXXXXX)

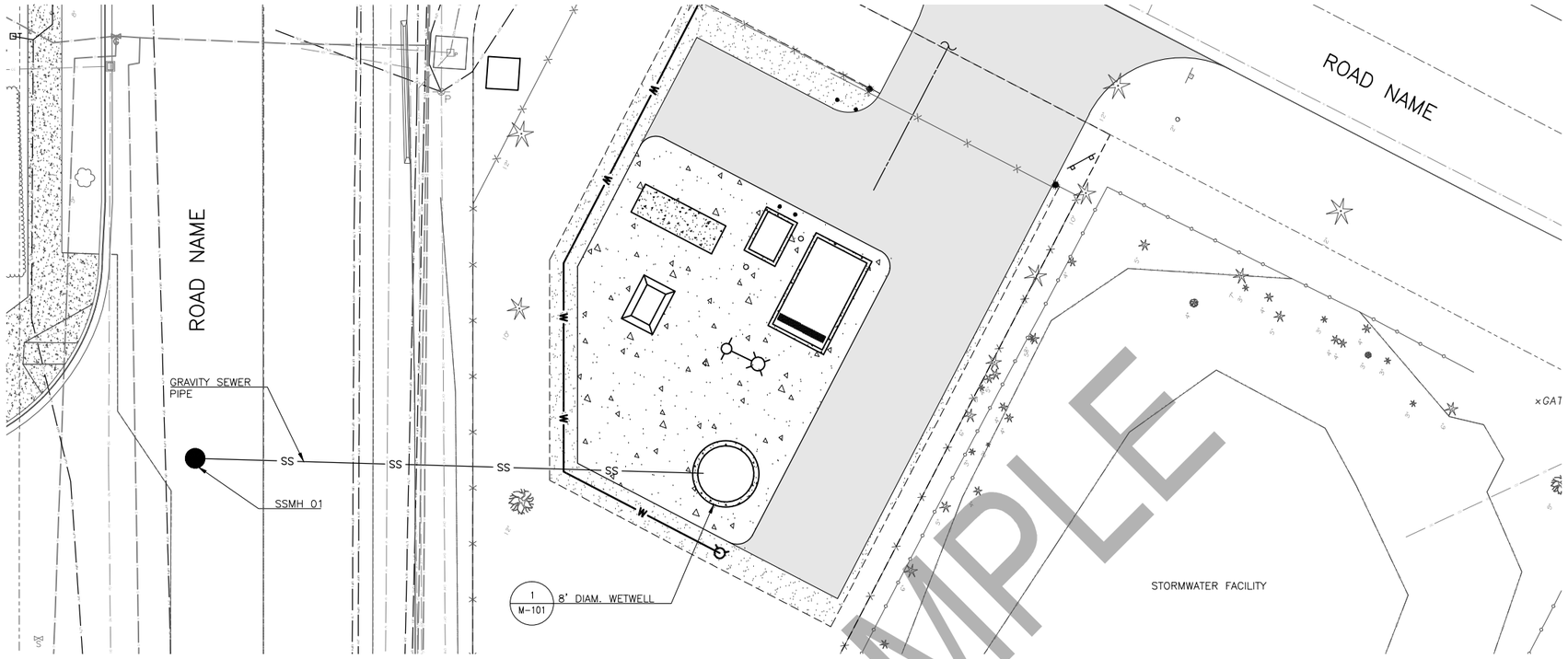

N

10 05 0 10 20

SCALE IN FEET

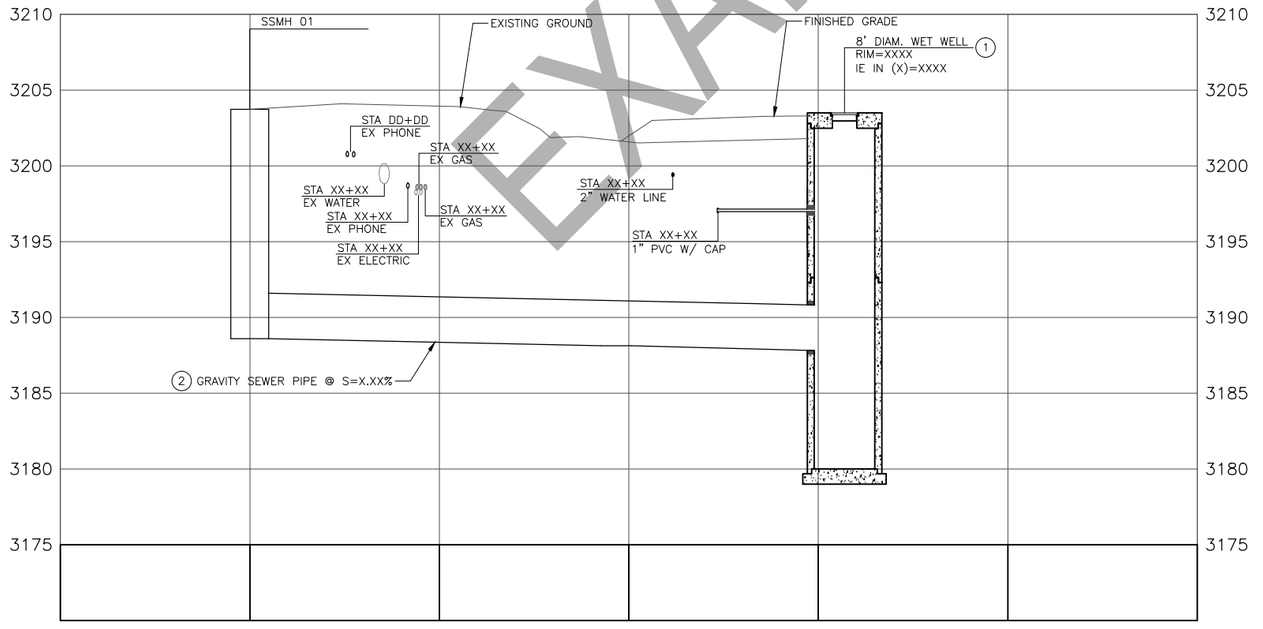

EXAMPLE

KEY NOTES:

1. RIM ELEVATION TO BE 6" ABOVE FINISH GRADE AND 12" ABOVE 100 YEAR FLOOD ELEVATION.
2. NOTE MAXIMUM SLOPE PER HYDRAULIC INSTITUTE STANDARD 9.8, ARTICLE C.4.2

FOR SAMPLE ONLY

RECORD DRAWINGS

REVISIONS DRAWN BY: XX DATE: XX/XX/XX

THESE RECORD DRAWINGS HAVE BEEN PREPARED, IN PART, ON THE BASIS OF INFORMATION COMPILED BY OTHERS. THEY ARE NOT INTENDED TO REPRESENT IN DETAIL THE EXACT LOCATION, TYPE OF COMPONENT NOR MANNER OF CONSTRUCTION. THE ENGINEER WILL NOT BE RESPONSIBLE FOR ANY ERRORS OR OMISSIONS WHICH HAVE BEEN INCORPORATED INTO THE RECORD DRAWINGS.

FOR SEALS AND SIGNATURES

(PROJECT NAME) CIVIL

GRAVITY SEWER PLAN AND PROFILE

DESCHUTES COUNTY, OREGON

REVISIONS:

(CONSULTANT ENGINEER NAME, ADDRESS & PHONE NUMBER)

DESIGNED BY:
DRAWN BY:
SCALE:
FILE:
DATE:

VERIFY SCALES

0 1"

BAR EQUALS ONE INCH ON ORIGINAL DRAWING

SHEET: C-004

COB # (XXXXXX)

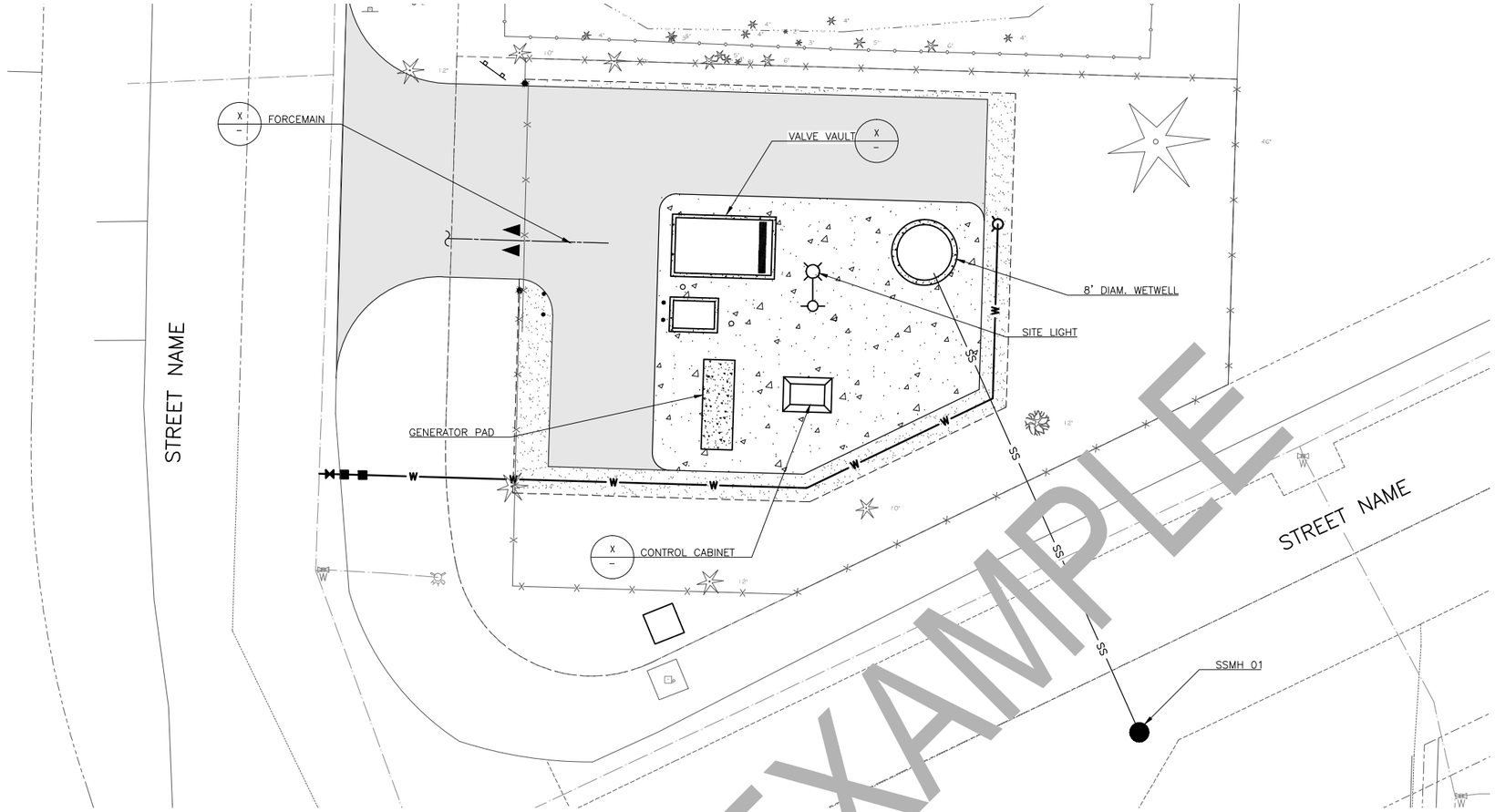

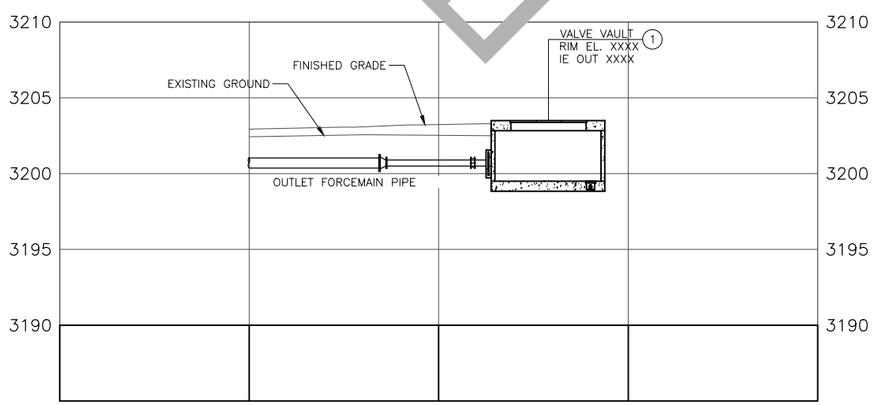

N

10 05 0 10 20

SCALE IN FEET

KEY NOTES:

(1) RIM ELEVATION TO BE 6" ABOVE FINISH GRADE AND 12" ABOVE 100 YEAR FLOOD ELEVATION.

FOR SAMPLE ONLY

RECORD DRAWINGS

REVISIONS DRAWN BY: XX DATE: XX/XX/XX

THESE RECORD DRAWINGS HAVE BEEN PREPARED, IN PART, ON THE BASIS OF INFORMATION COMPILED BY OTHERS. THEY ARE NOT INTENDED TO REPRESENT IN DETAIL THE EXACT LOCATION, TYPE OF COMPONENT NOR MANNER OF CONSTRUCTION. THE ENGINEER WILL NOT BE RESPONSIBLE FOR ANY ERRORS OR OMISSIONS WHICH HAVE BEEN INCORPORATED INTO THE RECORD DRAWINGS.

FOR SEALS AND SIGNATURES

(PROJECT NAME)
CIVIL

FORCE MAIN SEWER PLAN AND PROFILE

DESCHUTES COUNTY, OREGON

REVISIONS:

(CONSULTANT ENGINEER NAME, ADDRESS & PHONE NUMBER)

DESIGNED BY:
DRAWN BY:
SCALE:
FILE:
DATE:

VERIFY SCALES

0 1"

BAR EQUALS ONE INCH ON ORIGINAL DRAWING

SHEET: C-005

COB # (XXXXXX)

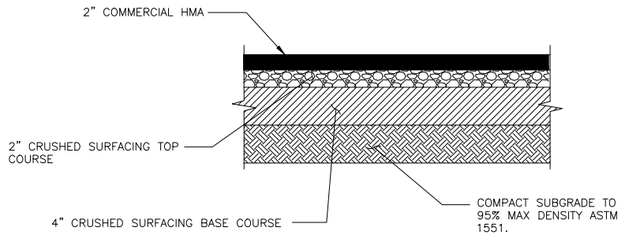

1 ASPHALT PAVEMENT
N.T.S.

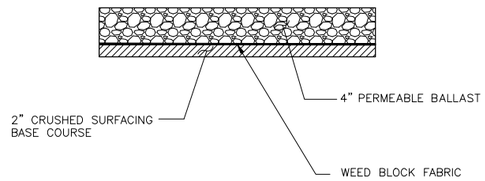

2 GRAVEL SURFACING
N.T.S.

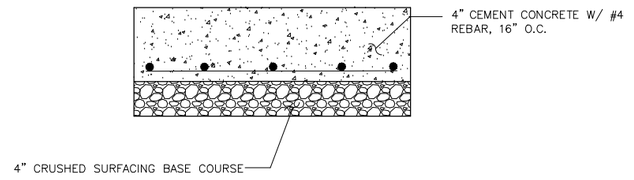

3 REINFORCED CONCRETE PAD
N.T.S.

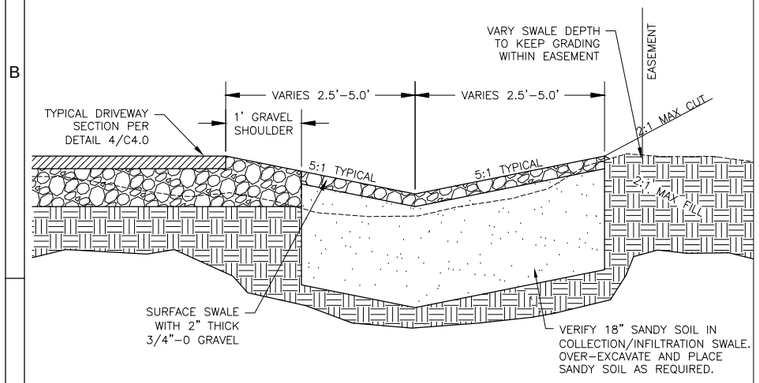

4 DRAINAGE COLLECTION INFILTRATION SWALE SECTION
N.T.S.

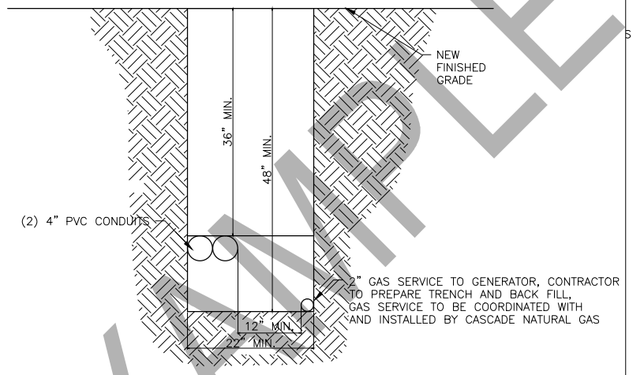

5 PP AND CNG JOINT TRENCH REQUIREMENTS
N.T.S.

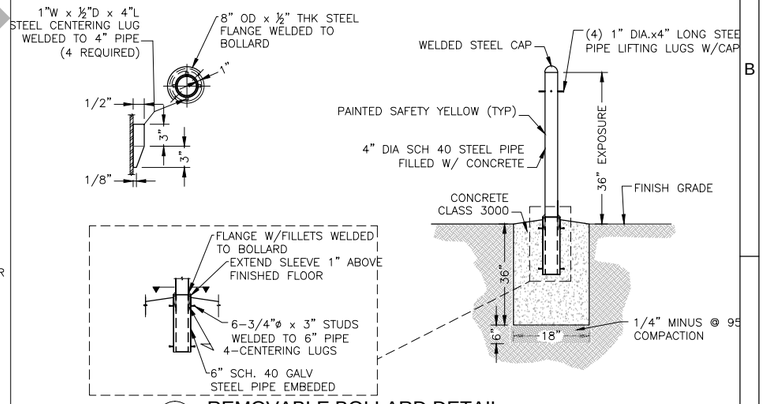

6 REMOVABLE BOLLARD DETAIL
N.T.S.

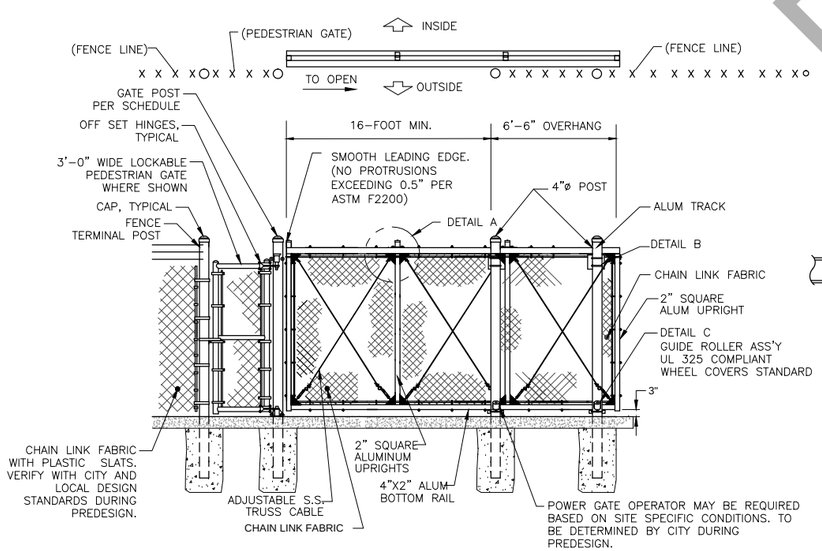

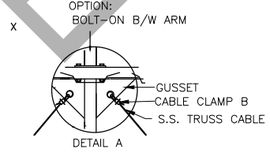

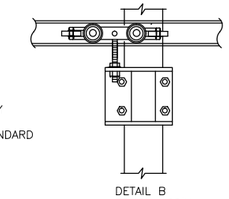

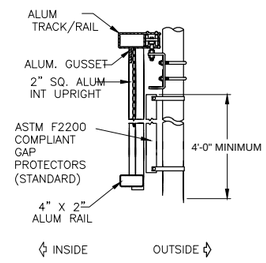

7 CHAIN LINK CANTILEVER SLIDE GATE
N.T.S.

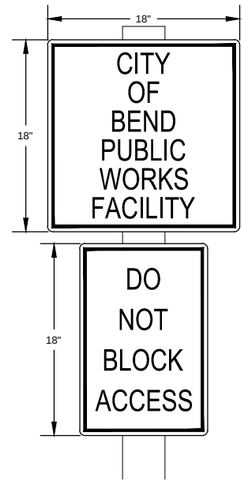

STREET SIGN TO MEET MUTCD STANDARDS.
18"x18"
BLACK LEGEND ON WHITE BACKGROUND
2" LETTERING

STREET SIGN TO MEET MUTCD STANDARDS.
12"x18"
RED LEGEND ON WHITE BACKGROUND
2" LETTERING

8 SIGNING DETAIL
N.T.S.

FOR SAMPLE ONLY

RECORD DRAWINGS

REVISIONS DRAWN BY: XX DATE: XX/XX/XX

THESE RECORD DRAWINGS HAVE BEEN PREPARED, IN PART, ON THE BASIS OF INFORMATION COMPILED BY OTHERS. THEY ARE NOT INTENDED TO REPRESENT IN DETAIL THE EXACT LOCATION, TYPE OF COMPONENT NOR MANNER OF CONSTRUCTION. THE ENGINEER WILL NOT BE RESPONSIBLE FOR ANY ERRORS OR OMISSIONS WHICH HAVE BEEN INCORPORATED INTO THE RECORD DRAWINGS.

SAMPLE

FOR SEALS AND SIGNATURES

(PROJECT NAME)
CIVIL

CIVIL DETAILS

DESCHUTES COUNTY, OREGON

REVISIONS:

(CONSULTANT ENGINEER NAME, ADDRESS & PHONE NUMBER)

DESIGNED BY:
DRAWN BY:
SCALE:
FILE:
DATE:

VERIFY SCALES
0 1"
BAR EQUALS ONE INCH ON ORIGINAL DRAWING

SHEET: C-006

COB # (XXXXXX)

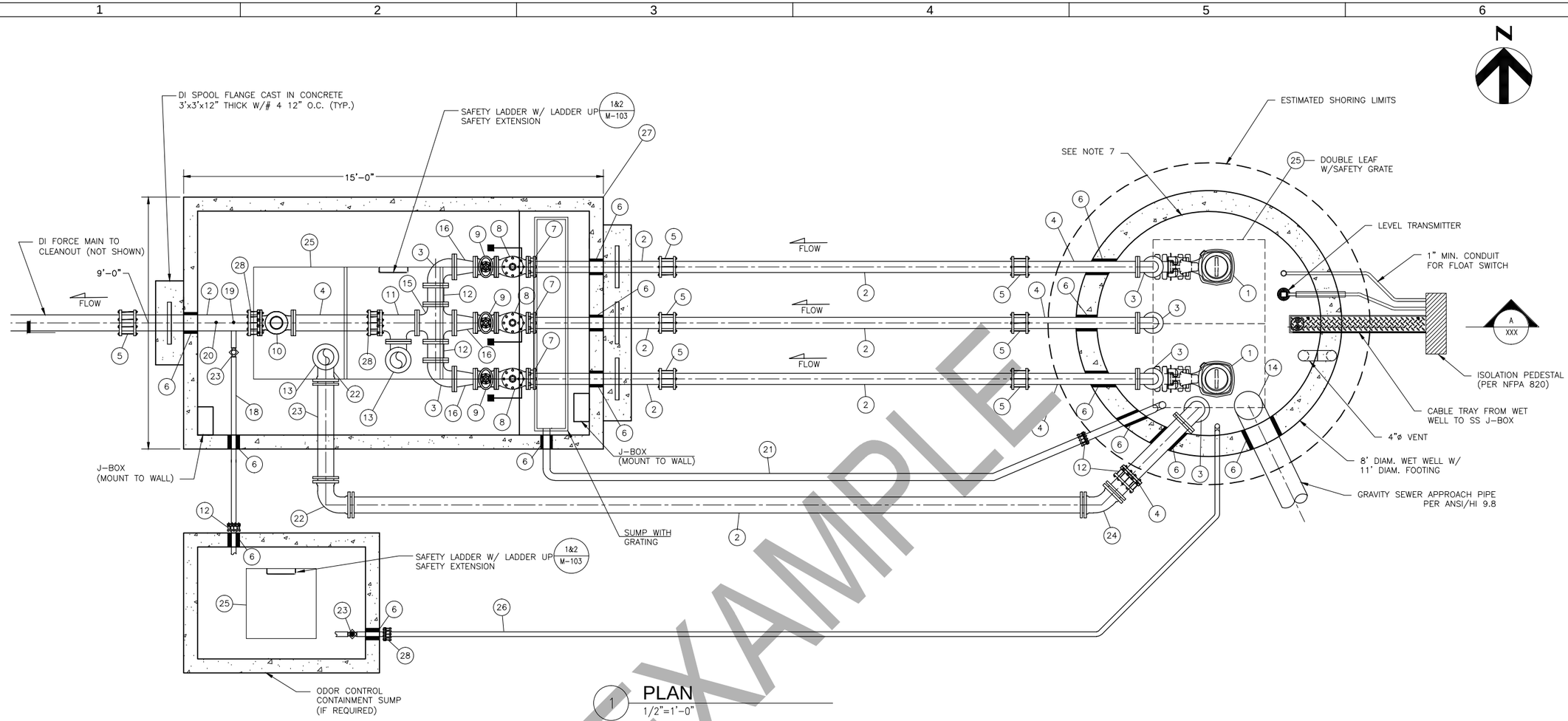

1 PLAN
1/2"=1'-0"

KEY NOTES:

1. SUBMERSIBLE PUMPS, NOTE 6
2. DUCTILE IRON, PLAIN END
3. DUCTILE IRON 90° BEND, FL
4. DUCTILE IRON PIPE, FLANGE X PLAIN END
5. FLEXIBLE COUPLING
6. LINK SEAL
7. DISMANTLING JOINT
8. SWING CHECK VALVE W/ SPRING AND LEVER, FLANGED
9. PLUG VALVE, FLANGED
10. FLOW METER, FLANGED
11. TEE, FLANGED
12. PROVIDE FLANGED COUPLING ADAPTER FOR DIFFERENTIAL SETTLEMENT
13. PUMPER PORT WITH ALUMINUM CAM LOCK FITTINGS (2 TYP.) MALE W/ CAP
14. DOWN TURNED TEE
15. CROSS, FLANGED
16. REDUCER, FLANGED
17. NOT USED THIS SHEET
18. PIPE FOR FUTURE ODOR CONTROL CHEMICAL FEED PENETRATION WITH CAP, NOTE 5
19. TAPPING SADDLE WITH 1" BALL VALVE
20. PRESSURE TRANSMITTER ASSEMBLY WITH SADDLE TAP
21. PVC SDR 35 DRAIN LINE
22. 90° BEND, MJ
23. ISOLATION BALL VALVE IN VALVE BOX
24. 45° BEND, MJ
25. ALUMINUM, H20 LOAD RATED ACCESS HATCH
26. 4" DUCTILE IRON DRAIN LINE
27. PRECAST VALVE VAULT, SEE NOTE 1
28. FLANGED COUPLING ADAPTER

GENERAL NOTES:

1. VALVE VAULT SHALL BE PRECAST. (4' MAX DEPTH RIM TO FLOOR)
2. ALL PIPE AND FITTINGS IN WETWELL SHALL BE DUCTILE IRON CLASS 52 WITH FLANGED JOINTS AND EPOXY COATED.
3. ALL PENETRATIONS SHALL BE CORE DRILLED AND SECURED/SEALED WITH LINK SEAL.
4. ALL HARDWARE AND FASTENERS TO BE 316 STAINLESS STEEL.
5. CITY OF BEND RESERVES THE RIGHT TO REQUIRE ODOR CONTROL SECONDARY CONTAINMENT SUMP AND ODOR CONTROL CHEMICAL FEED BASED ON LOCAL SITE REQUIREMENTS.
6. SUBMERSIBLE PUMPS TO BE FLYGT WITH WITH N-IMPELLER OR APPROVED EQUAL. SEE G-008 FOR ADDITIONAL DESIGN DETAIL INFORMATION.
7. PROVIDE THERMOPLASTIC LINER SYSTEM PER CITY STANDARDS SPECIFICATION SECTION 44 42 73.01, PREDL SYSTEMS, OR EQUAL.
8. CONTRACTOR TO INSTALL SST GUIDE RAILS AND PUMP DISCHARGE PIPING FOR FUTURE THIRD PUMP.
9. BYPASS SUCTION END OF PIPE TO BE 2'-0" BELOW GRAVITY APPROACH SEWER INVERT.
10. ALL PIPE AND FITTING SIZES TO BE DETERMINED BASED ON SITE SPECIFIC REQUIREMENTS.

EXAMPLE

FOR SAMPLE ONLY

RECORD DRAWINGS

REVISIONS DRAWN BY: XX DATE: XX/XX/XX

THESE RECORD DRAWINGS HAVE BEEN PREPARED, IN PART, ON THE BASIS OF INFORMATION COMPILED BY OTHERS. THEY ARE NOT INTENDED TO REPRESENT IN DETAIL THE EXACT LOCATION, TYPE OF COMPONENT NOR MANNER OF CONSTRUCTION. THE ENGINEER WILL NOT BE RESPONSIBLE FOR ANY ERRORS OR OMISSIONS WHICH HAVE BEEN INCORPORATED INTO THE RECORD DRAWINGS.

FOR SEALS AND SIGNATURES

(PROJECT NAME)
MECHANICAL

LIFT STATION MECHANICAL PLAN

DESCHUTES COUNTY, OREGON

REVISIONS:

(CONSULTANT ENGINEER NAME, ADDRESS & PHONE NUMBER)

DESIGNED BY:
DRAWN BY:
SCALE:
FILE:
DATE:

VERIFY SCALES
0 1"
BAR EQUALS ONE INCH ON ORIGINAL DRAWING

SHEET: M-101

COB # (XXXXXX)

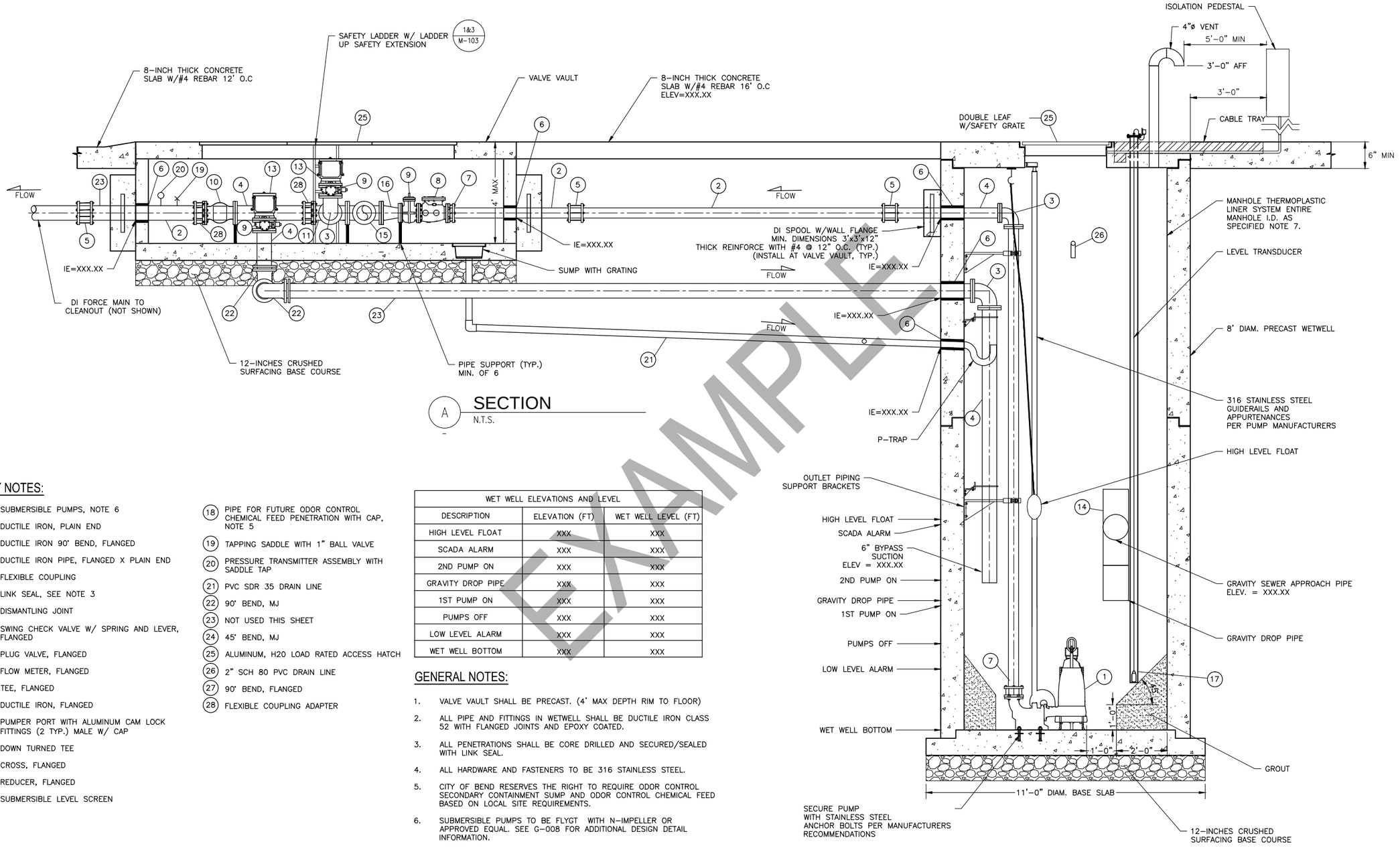

A SECTION
N.T.S.

KEY NOTES:

1. SUBMERSIBLE PUMPS, NOTE 6
2. DUCTILE IRON, PLAIN END
3. DUCTILE IRON 90° BEND, FLANGED
4. DUCTILE IRON PIPE, FLANGED X PLAIN END
5. FLEXIBLE COUPLING
6. LINK SEAL, SEE NOTE 3
7. DISMANTLING JOINT
8. SWING CHECK VALVE W/ SPRING AND LEVER, FLANGED
9. PLUG VALVE, FLANGED
10. FLOW METER, FLANGED
11. TEE, FLANGED
12. DUCTILE IRON, FLANGED
13. PUMPER PORT WITH ALUMINUM CAM LOCK FITTINGS (2 TYP.) MALE W/ CAP
14. DOWN TURNED TEE
15. CROSS, FLANGED
16. REDUCER, FLANGED
17. SUBMERSIBLE LEVEL SCREEN
18. PIPE FOR FUTURE ODOR CONTROL CHEMICAL FEED PENETRATION WITH CAP, NOTE 5
19. TAPPING SADDLE WITH 1" BALL VALVE
20. PRESSURE TRANSMITTER ASSEMBLY WITH SADDLE TAP
21. PVC SDR 35 DRAIN LINE
22. 90° BEND, MJ
23. NOT USED THIS SHEET
24. 45° BEND, MJ
25. ALUMINUM, H20 LOAD RATED ACCESS HATCH
26. 2" SCH 80 PVC DRAIN LINE
27. 90° BEND, FLANGED
28. FLEXIBLE COUPLING ADAPTER

WET WELL ELEVATIONS AND LEVEL		
DESCRIPTION	ELEVATION (FT)	WET WELL LEVEL (FT)
HIGH LEVEL FLOAT	XXX	XXX
SCADA ALARM	XXX	XXX
2ND PUMP ON	XXX	XXX
GRAVITY DROP PIPE	XXX	XXX
1ST PUMP ON	XXX	XXX
PUMPS OFF	XXX	XXX
LOW LEVEL ALARM	XXX	XXX
WET WELL BOTTOM	XXX	XXX

GENERAL NOTES:

1. VALVE VAULT SHALL BE PRECAST. (4' MAX DEPTH RIM TO FLOOR)
2. ALL PIPE AND FITTINGS IN WETWELL SHALL BE DUCTILE IRON CLASS 52 WITH FLANGED JOINTS AND EPOXY COATED.
3. ALL PENETRATIONS SHALL BE CORE DRILLED AND SECURED/SEALED WITH LINK SEAL.
4. ALL HARDWARE AND FASTENERS TO BE 316 STAINLESS STEEL.
5. CITY OF BEND RESERVES THE RIGHT TO REQUIRE ODOR CONTROL SECONDARY CONTAINMENT SUMP AND ODOR CONTROL CHEMICAL FEED BASED ON LOCAL SITE REQUIREMENTS.
6. SUBMERSIBLE PUMPS TO BE FLYGT WITH N-IMPELLER OR APPROVED EQUAL. SEE G-008 FOR ADDITIONAL DESIGN DETAIL INFORMATION.
7. PROVIDE THERMOPLASTIC LINER SYSTEM PER CITY STANDARDS SPECIFICATION SECTION 44 42 73.01, PREDL SYSTEMS, OR EQUAL.
8. CONTRACTOR TO INSTALL SST GUIDE RAILS AND PUMP DISCHARGE PIPING FOR FUTURE THIRD PUMP.
9. BYPASS SUCTION END OF PIPE TO BE 2'-0" BELOW GRAVITY APPROACH SEWER INVERT.
10. ALL PIPE AND FITTING SIZES TO BE DETERMINED BASED ON SITE SPECIFIC REQUIREMENTS.

EXAMPLE

FOR SEALS AND SIGNATURES

(PROJECT NAME)
MECHANICAL
LIFT STATION MECHANICAL SECTION
DESCHUTES COUNTY, OREGON

REVISIONS:

(CONSULTANT ENGINEER NAME, ADDRESS & PHONE NUMBER)

DESIGNED BY:
DRAWN BY:
SCALE:
FILE:
DATE:

VERIFY SCALES
0 1"
BAR EQUALS ONE INCH ON ORIGINAL DRAWING

SHEET: M-102

COB # (XXXXXX)

FOR SAMPLE ONLY

RECORD DRAWINGS

REVISIONS DRAWN BY: XX DATE: XX/XX/XX

THESE RECORD DRAWINGS HAVE BEEN PREPARED, IN PART, ON THE BASIS OF INFORMATION COMPILED BY OTHERS. THEY ARE NOT INTENDED TO REPRESENT IN DETAIL THE EXACT LOCATION, TYPE OF COMPONENT NOR MANNER OF CONSTRUCTION. THE ENGINEER WILL NOT BE RESPONSIBLE FOR ANY ERRORS OR OMISSIONS WHICH HAVE BEEN INCORPORATED INTO THE RECORD DRAWINGS.

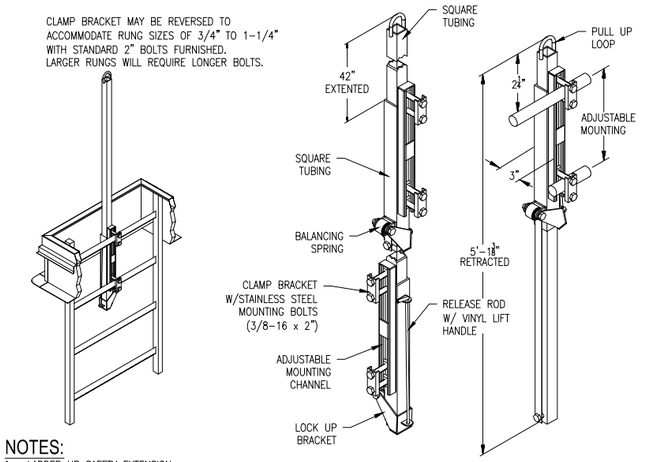

NOTES:
1. LADDER UP SAFETY EXTENSION SHALL BE STAINLESS STEEL

1 LADDER UP SAFETY EXTENSION
N.T.S.

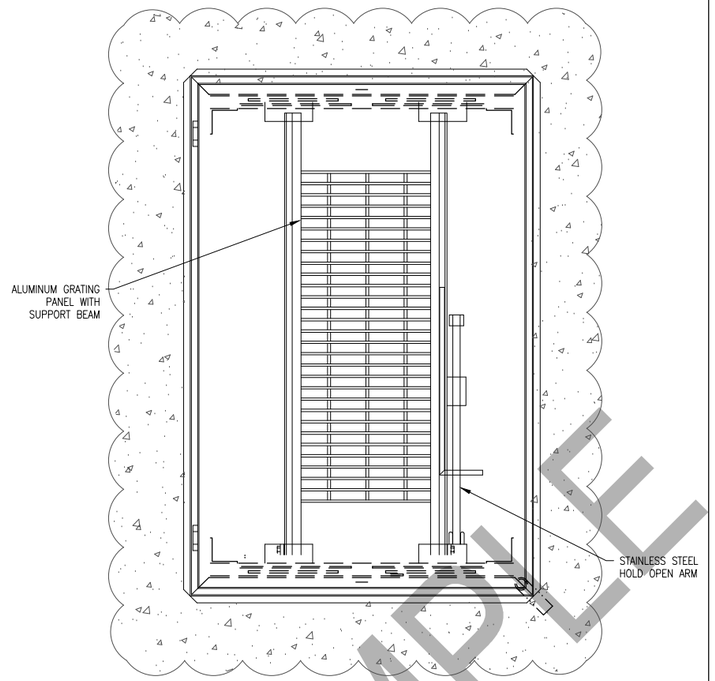

2 SAFETY GRATE DETAIL
N.T.S.

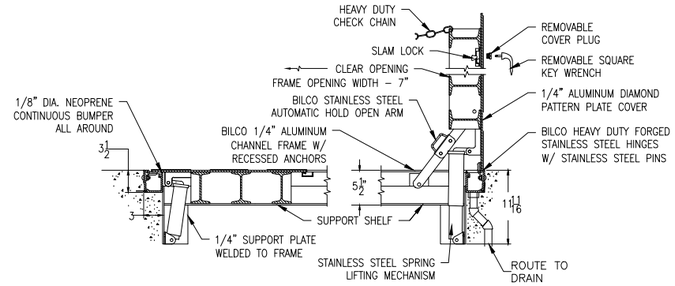

A SECTION
N.T.S.

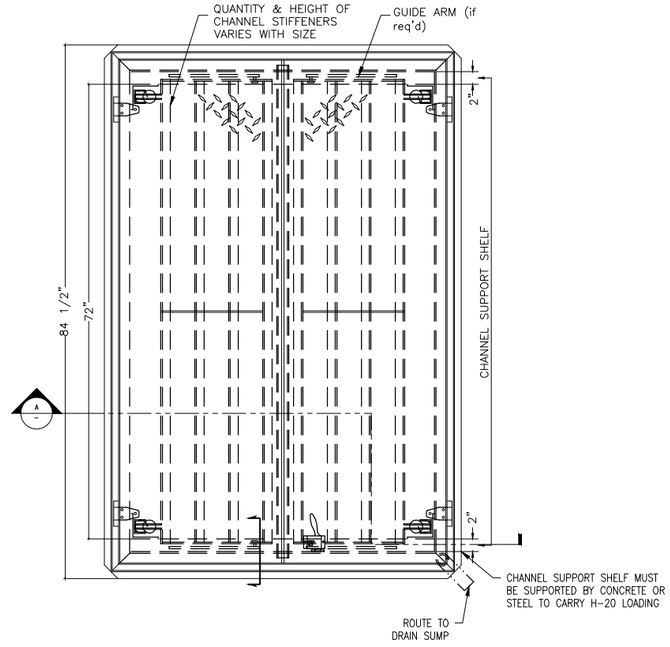

4 ACCESS DOOR DETAIL
N.T.S.

NOTES:
1. ALL ACCESS DOORS AND HATCHES TO BE H-20 RATED.

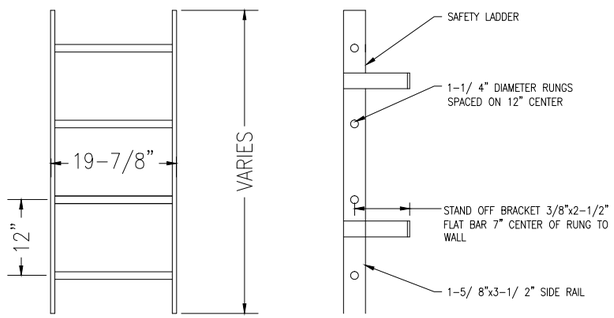

NOTES:
1. RUNGS SHOULD BE NONSKID.

3 LADDER DETAIL
N.T.S.

EXAMPLE

FOR SAMPLE ONLY
RECORD DRAWINGS
REVISIONS DRAWN BY: XX DATE: XX/XX/XX
THESE RECORD DRAWINGS HAVE BEEN PREPARED, IN PART, ON THE BASIS OF INFORMATION COMPILED BY OTHERS. THEY ARE NOT INTENDED TO REPRESENT IN DETAIL THE EXACT LOCATION, TYPE OF COMPONENT NOR MANNER OF CONSTRUCTION. THE ENGINEER WILL NOT BE RESPONSIBLE FOR ANY ERRORS OR OMISSIONS WHICH HAVE BEEN INCORPORATED INTO THE RECORD DRAWINGS.

FOR SEALS AND SIGNATURES

(PROJECT NAME)
MECHANICAL
MECHANICAL DETAILS
DESCHUTES COUNTY, OREGON

REVISIONS:

(CONSULTANT ENGINEER NAME, ADDRESS & PHONE NUMBER)

DESIGNED BY:
DRAWN BY:
SCALE:
FILE:
DATE:

VERIFY SCALES
0 1"
BAR EQUALS ONE INCH ON ORIGINAL DRAWING

SHEET: M-103

COB # (XXXXXX)

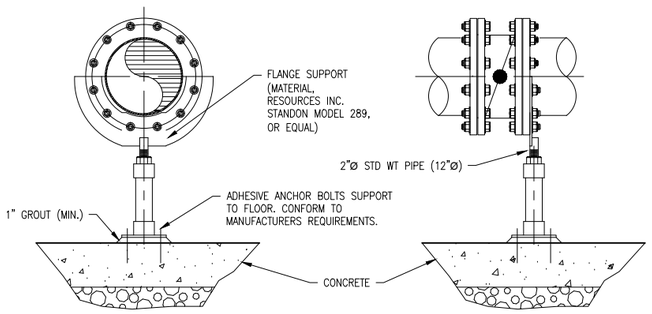

NOTE:

1. WELD TO RESIST UPLIFT PER MFR. RECOMMENDATIONS

5 PIPE SUPPORT
N.T.S.

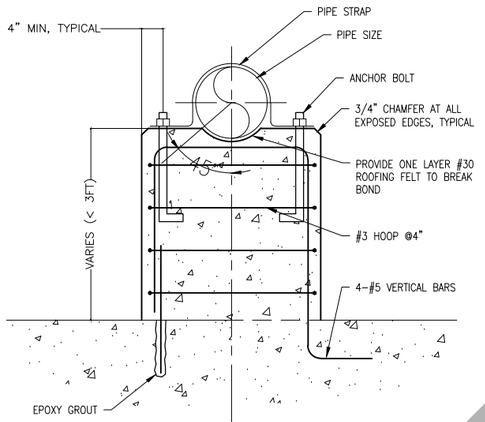

PIPE SIZE, DIA	PIPE STRAP	ANCHOR BOLTS, DIA	PEDESTAL THICKNESS
6"-12"	1/4"x2"	1/2"	12"

6 CONCRETE PEDESTAL SUPPORT
N.T.S.

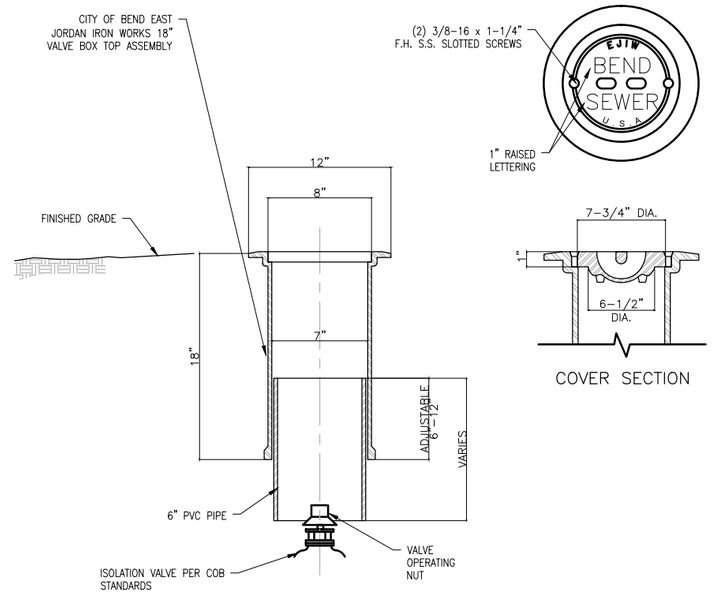

7 VALVE BOX
N.T.S.

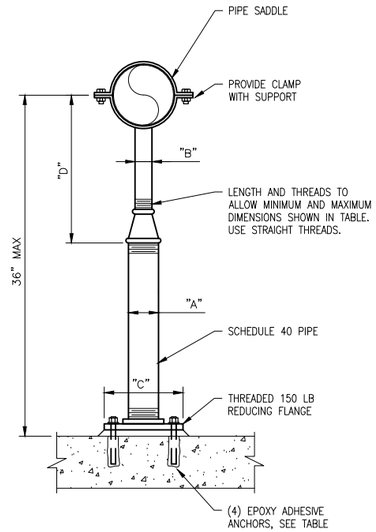

FLOOR PIPE SUPPORT SCHEDULE
DIMENSIONS IN INCHES

PIPE SIZE	"A"	"B"	"C"	"D" MINIMUM	"D" MAXIMUM	ANCHORS DIA	ANCHORS EMBED
≤ 2 1/2	2 1/2	1 1/2	9	8	13	5/8	5
3	2 1/2	1 1/2	9	8 1/2	13 1/2	5/8	5
3 1/2	2 1/2	1 1/2	9	8 1/2	13 1/2	5/8	5
4	3	2 1/2	9	9 1/2	14	5/8	5
6	3	2 1/2	9	10 1/2	15 1/2	5/8	5
8	3	2 1/2	9	11 1/2	16 1/2	5/8	5
10	3	2 1/2	9	13 1/2	18 1/2	5/8	5
12	3	2 1/2	9	15	19 1/2	5/8	5

8 FLOOR PIPE SUPPORT
N.T.S.

EXAMPLE

FOR SAMPLE ONLY

RECORD DRAWINGS

REVISIONS DRAWN BY: XX DATE: XX/XX/XX

THESE RECORD DRAWINGS HAVE BEEN PREPARED, IN PART, ON THE BASIS OF INFORMATION COMPILED BY OTHERS. THEY ARE NOT INTENDED TO REPRESENT IN DETAIL THE EXACT LOCATION, TYPE OF COMPONENT NOR MANNER OF CONSTRUCTION. THE ENGINEER WILL NOT BE RESPONSIBLE FOR ANY ERRORS OR OMISSIONS WHICH HAVE BEEN INCORPORATED INTO THE RECORD DRAWINGS.

FOR SEALS AND SIGNATURES

(PROJECT NAME)
MECHANICAL

MECHANICAL DETAILS

DESCHUTES COUNTY, OREGON

REVISIONS:

(CONSULTANT ENGINEER NAME, ADDRESS & PHONE NUMBER)

DESIGNED BY:
DRAWN BY:
SCALE:
FILE:
DATE:

VERIFY SCALES
0 1"
BAR EQUALS ONE INCH ON ORIGINAL DRAWING

SHEET: M-104

COB # (XXXXXX)

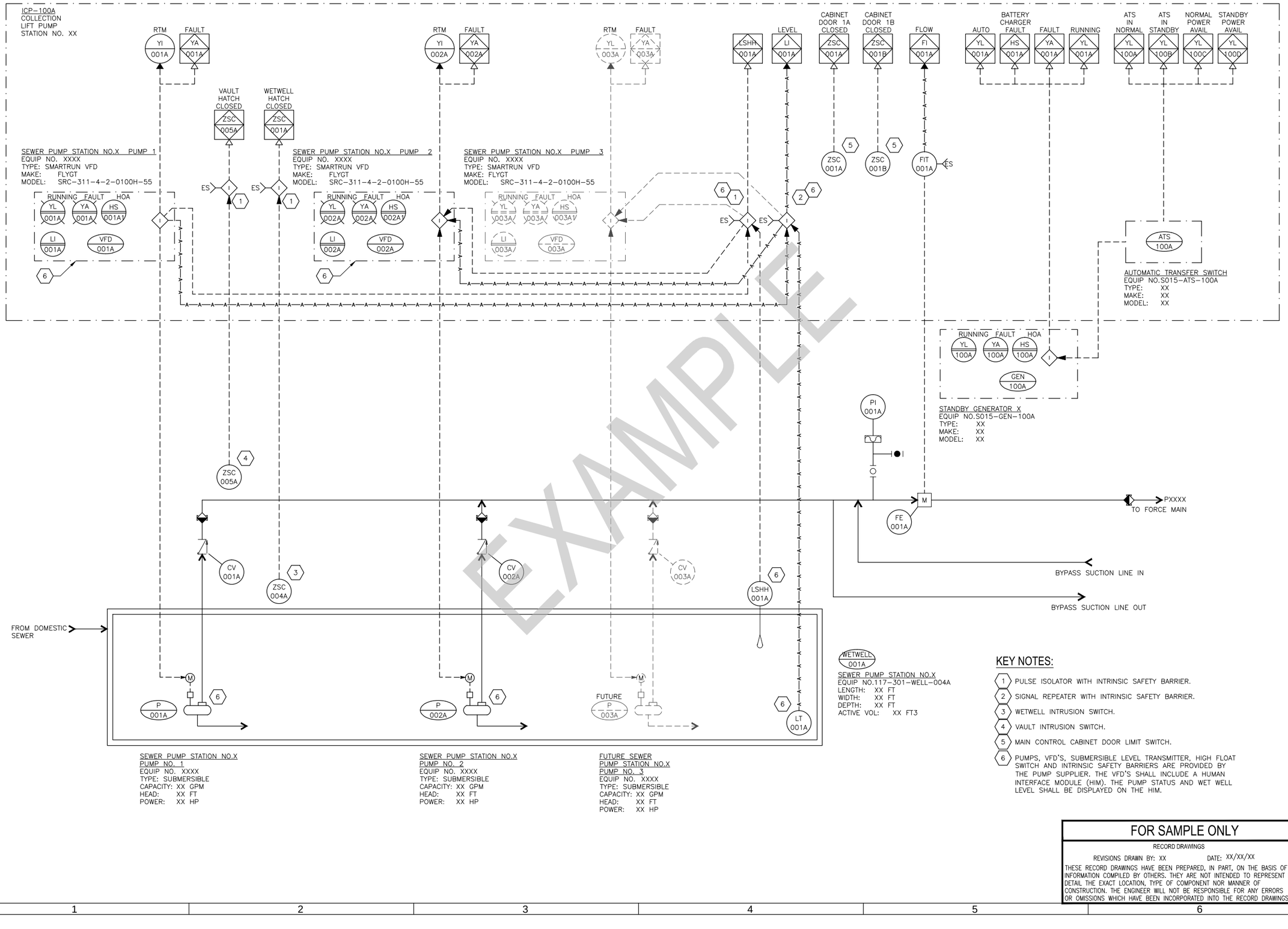

KEY NOTES:

1. PULSE ISOLATOR WITH INTRINSIC SAFETY BARRIER.
2. SIGNAL REPEATER WITH INTRINSIC SAFETY BARRIER.
3. WETWELL INTRUSION SWITCH.
4. VAULT INTRUSION SWITCH.
5. MAIN CONTROL CABINET DOOR LIMIT SWITCH.
6. PUMPS, VFD'S, SUBMERSIBLE LEVEL TRANSMITTER, HIGH FLOAT SWITCH AND INTRINSIC SAFETY BARRIERS ARE PROVIDED BY THE PUMP SUPPLIER. THE VFD'S SHALL INCLUDE A HUMAN INTERFACE MODULE (HIM). THE PUMP STATUS AND WET WELL LEVEL SHALL BE DISPLAYED ON THE HIM.

EXAMPLE

FOR SAMPLE ONLY

RECORD DRAWINGS

REVISIONS DRAWN BY: XX DATE: XX/XX/XX

THESE RECORD DRAWINGS HAVE BEEN PREPARED, IN PART, ON THE BASIS OF INFORMATION COMPILED BY OTHERS. THEY ARE NOT INTENDED TO REPRESENT IN DETAIL THE EXACT LOCATION, TYPE OF COMPONENT NOR MANNER OF CONSTRUCTION. THE ENGINEER WILL NOT BE RESPONSIBLE FOR ANY ERRORS OR OMISSIONS WHICH HAVE BEEN INCORPORATED INTO THE RECORD DRAWINGS.

FOR SEALS AND SIGNATURES

(PROJECT NAME)
INSTRUMENTATION & CONTROLS
STANDARD P&ID CONSTANT
DESCHUTES COUNTY, OREGON

REVISIONS:

(CONSULTANT ENGINEER NAME, ADDRESS & PHONE NUMBER)

DESIGNED BY: XXX
DRAWN BY: XXX
SCALE: NONE
FILE: I-001.dwg
DATE:

VERIFY SCALES
0 1"
BAR EQUALS ONE INCH ON ORIGINAL DRAWING

SHEET: I-001

COB # (XXXXXX)

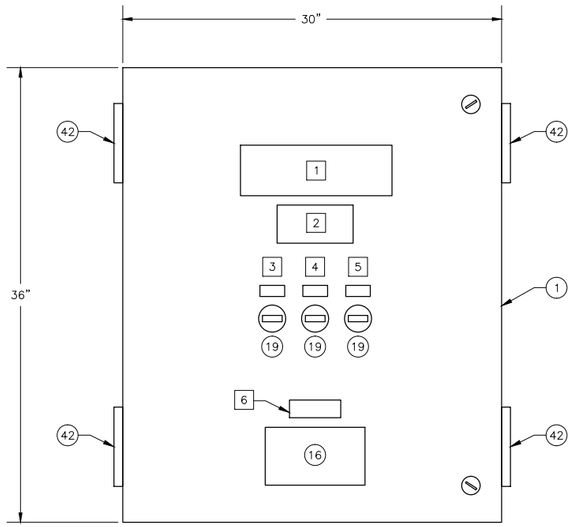

EXTERIOR FRONT ELEVATION

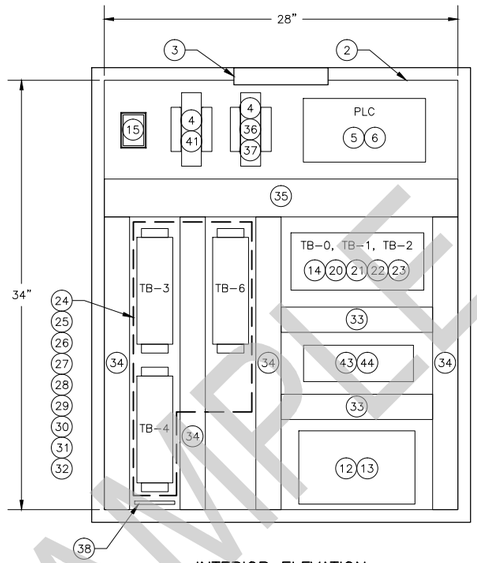

INTERIOR ELEVATION

GENERAL NOTES:

1. PANEL CONSTRUCTION PER NEC 2014, UL 508A REQUIREMENTS, FOLLOW NFPA 79 WHERE APPLICABLE.
2. PANEL WIRING EXCEPT WHERE OTHER SPECIFIED:
   - SINGLE WIRES SHALL BE THHN 16AWG, EXCEPT WHERE INTENDED FOR POWER OR MOTOR CIRCUITS WHICH SHALL BE 12AWG, MIN.
   - COLOR CODE SHALL FOLLOW UL 508A.
   - TWISTED PAIR ANALOG SIGNAL CABLE SHALL BE BELDEN 8760 OR EQUAL.
   - EACH WIRE SHALL BE IDENTIFIED WITH A PERMANENT WIRE LABEL, P/N BRADY LAT-18-361.
3. PANEL FABRICATOR SHALL PROVIDE ENGRAVED NAMEPLATES AS INDICATED AND LOCATED ON THIS DRAWING. REFERENCE OWNER'S ELECTRICAL SPECIFICATIONS FOR MATERIAL, FABRICATION, AND INSTALLATION DETAILS.
4. PANEL FABRICATOR TO LABEL ALL FUSES, TERMINAL BLOCKS, CIRCUIT BREAKERS WITH DEVICE DESIGNATION OR WIRE NUMBER AS SHOWN USING MANUFACTURER APPROPRIATE LABELING SYSTEM.
5. CONTROL PANEL SHALL NOT BE FABRICATED WITH A FALSE FRONT.
6. PROVIDE A MINIMUM OF 10% AVAILABLE TERMINAL BLOCKS.
7. PANEL LAYOUT SHALL RESERVE SPACE TO ADD A MINIMUM OF TWO PLC EXPANSION MODULES.

LEGEND:

[X] INDICATES BILL OF MATERIALS (BOM) ITEM; REFERENCE SHEET I-003

(X) INDICATES NAMEPLATE ITEM; REFERENCE SHEET I-003

1 CONTROL PANEL PANEL LAYOUT ELEVATION
N.T.S.

EXAMPLE

FOR SAMPLE ONLY

RECORD DRAWINGS

REVISIONS DRAWN BY: XX DATE: XX/XX/XX

THESE RECORD DRAWINGS HAVE BEEN PREPARED, IN PART, ON THE BASIS OF INFORMATION COMPILED BY OTHERS. THEY ARE NOT INTENDED TO REPRESENT IN DETAIL THE EXACT LOCATION, TYPE OF COMPONENT NOR MANNER OF CONSTRUCTION. THE ENGINEER WILL NOT BE RESPONSIBLE FOR ANY ERRORS OR OMISSIONS WHICH HAVE BEEN INCORPORATED INTO THE RECORD DRAWINGS.

FOR SEALS AND SIGNATURES

(PROJECT NAME)
CONTROL PANEL TYPE B
TEMPLATE (50 I/Os) PANEL LAYOUT
DESCHUTES COUNTY, OREGON

REVISIONS:

(CONSULTANT ENGINEER NAME, ADDRESS & PHONE NUMBER)

DESIGNED BY: XXX
DRAWN BY: XXX
SCALE: NONE
FILE: I-002.dwg
DATE:

VERIFY SCALES
0 1"
BAR EQUALS ONE INCH ON ORIGINAL DRAWING

SHEET: I-002

COB # (XXXXXX)

BILL OF MATERIALS

ITEM	QTY	DESCRIPTION	MANUFACTURE	MODEL/CAT #	SUPPLIER
(1)	1	ENCLOSURE	HOFFMAN	CSD363010 OR APPROVED EQUAL	PF
(2)	1	BACK PANEL	HOFFMAN	CP3630	PF
(3)	1	LIGHTING KIT	HOFFMAN	ALF16D12R	PF
(4)	AR	MOUNTING ALUMINUM BRACKETS	SHOP SUPPLY	SHOP SUPPLY	PF
(5)	1	MICROLOGIX 1400 WITH ETHERNET PORT	ALLEN-BRADLEY	1766-L32BXB	PF
(6)	1	1762 AI MODULE	ALLEN-BRADLEY	1762-IF4	PF
(7)	–	–	–	–	–
(8)	–	–	–	–	–
(9)	–	–	–	–	–
(10)	–	–	–	–	–
(11)	–	–	–	–	–
(12)	1	24VDC POWER SUPPLY	PULS	QS10.241	PF
(13)	1	24VDC UPS WITH INTEGRATED BATTERY	PULS	UBC10-241	PF
(14)	2	15A CIRCUIT BREAKER	ALLEN-BRADLEY	1492-SP1C150	PF
(15)	1	SURGE SUPPRESSOR	CONTROL CONCEPTS	ISLATROL IE-120	PF
(16)	1	DATA INTERFACE PORT	HOFFMAN	HGF5CN	PF
(17)	–	–	–	–	–
(18)	–	–	–	–	–
(19)	3	ELECTROMECHANICAL HOUR METER	REDINGTON	732-0014	PF
(20)	AR	10A CB4200 SERIES CIRCUIT BREAKER	WEIDMULLER	910 190 3500	PF
(21)	AR	0.5A CB4200 SERIES CIRCUIT BREAKER	WEIDMULLER	910 100 3500	PF
(22)	AR	3A CB4200 SERIES CIRCUIT BREAKER	WEIDMULLER	910 170 3500	PF
(23)	AR	2A CB4200 SERIES CIRCUIT BREAKER	WEIDMULLER	910 150 3500	PF
(24)	AR	0.1A CB4200 SERIES CIRCUIT BREAKER	WEIDMULLER	910 417 3500	PF
(25)	AR	FEED THROUGH TERMINAL WDU 2.5 (BEIGE)	WEIDMULLER	–	PF
(26)	AR	FEED THROUGH TERMINAL WDU 2.5 BL (BLUE)	WEIDMULLER	–	PF
(27)	AR	GROUNDING TERMINAL WPE 2.5	WEIDMULLER	–	PF
(28)	AR	END PLATE WAP 2.5-10 (BEIGE)	WEIDMULLER	–	PF
(29)	AR	END PLATE WAP 2.5-10 BL (BLUE)	WEIDMULLER	–	PF
(30)	AR	PARTITION WTW EN (DARK BEIGE)	WEIDMULLER	–	PF
(31)	AR	END BRACKET WEW 35/2 (DARK BEIGE)	WEIDMULLER	–	PF
(32)	AR	ZINC PLATED YELLOW-CHROMATE STEEL T-35 DIN RAIL	SHOP SUPPLY	SHOP SUPPLY	PF
(33)	AR	1.5" W X 3" D WIREWAY W/ COVER	PANDUIT	F1.5X3LG6 & C1.5LG6	PF
(34)	AR	2" W X 3" D WIREWAY W/ COVER	PANDUIT	F2X3LG6 & C2LG6	PF
(35)	AR	3" W X 3" D WIREWAY W/ COVER	PANDUIT	F3X3LG6 & C3LG6	PF
(36)	1	8 PORT NETWORK SWITCH	SIXNET	SLX-8MS	PF
(37)	1	6FT CAT6 PATCH CABLE	SHOP SUPPLY	SHOP SUPPLY	PF
(38)	2	GROUND BUS	SHOP SUPPLY	SHOP SUPPLY	PF
(39)	–	–	–	–	–
(40)	–	–	–	–	–
(41)	1	LONG RANGE IP/ETHERNET RADIO	GE MDS	TO BE DETERMINED BY CITY STAFF	PF
(42)	4	LOUVER WITH FILTER	HOFFMAN	AVK44 / AFLT44	PF
(43)	1	4-POLE ICE CUBE RELAY / SOCKET	ALLEN-BRADLEY	700-HF34Z24-4 / 700-HN139	PF
(44)	5	2-POLE ICE CUBE RELAY / SOCKET	ALLEN-BRADLEY	700-HF32Z24-4 / 700-HN116	PF

NOTE: ALL MATERIALS SHOWN ARE THE MINIMUM REQUIREMENTS AND SHALL BE REVIEWED AND APPROVED BY THE CITY OF BEND DURING PRELIMINARY DESIGN

PF = PANEL FABRICATOR
COB = CITY OF BEND

NAMEPLATE SCHEDULE

NAMEPLATE	LINE	NAMEPLATE	PLATE SIZE	LETTERING SIZE
1	1	LIFT STATION XX LOCAL CONTROL PANEL	4" X 10"	1/2"
	2	WXXX-ICP-XXXB		1"
	–	–		–
2	1	120VAC POWER	3" X 6"	1/4"
	2	FROM PANELS		1/4"
	3	XXXXXX & XXXXXX		1/4"
3	1	PUMP 1 RTM	1/2" X 1"	3/16"
	–	–		–
	–	–		–
4	1	PUMP 2 RTM	1/2" X 1"	3/16"
	–	–		–
	–	–		–
5	1	PUMP 3 RTM	1/2" X 1"	3/16"
	–	–		–
	–	–		–
6	1	PORTABLE PROGRAMMING	1" X 3"	3/16"
	2	TERMINAL POWER		3/16"
	3	ONLY		3/16"

EXAMPLE

FOR SEALS AND SIGNATURES

(PROJECT NAME) CNTR PNL TYPE B TEMPLATE

(50 I/Os) BILL OF MATERIALS

DESCHUTES COUNTY, OREGON

REVISIONS:

(CONSULTANT ENGINEER NAME, ADDRESS & PHONE NUMBER)

DESIGNED BY: XXX
DRAWN BY: XXX
SCALE: NONE
FILE: I-003.dwg
DATE:

VERIFY SCALES
0 1"
BAR EQUALS ONE INCH ON ORIGINAL DRAWING

SHEET: I-003

COB # (XXXXXX)

FOR SAMPLE ONLY

RECORD DRAWINGS

REVISIONS DRAWN BY: XX DATE: XX/XX/XX

THESE RECORD DRAWINGS HAVE BEEN PREPARED, IN PART, ON THE BASIS OF INFORMATION COMPILED BY OTHERS. THEY ARE NOT INTENDED TO REPRESENT IN DETAIL THE EXACT LOCATION, TYPE OF COMPONENT NOR MANNER OF CONSTRUCTION. THE ENGINEER WILL NOT BE RESPONSIBLE FOR ANY ERRORS OR OMISSIONS WHICH HAVE BEEN INCORPORATED INTO THE RECORD DRAWINGS.

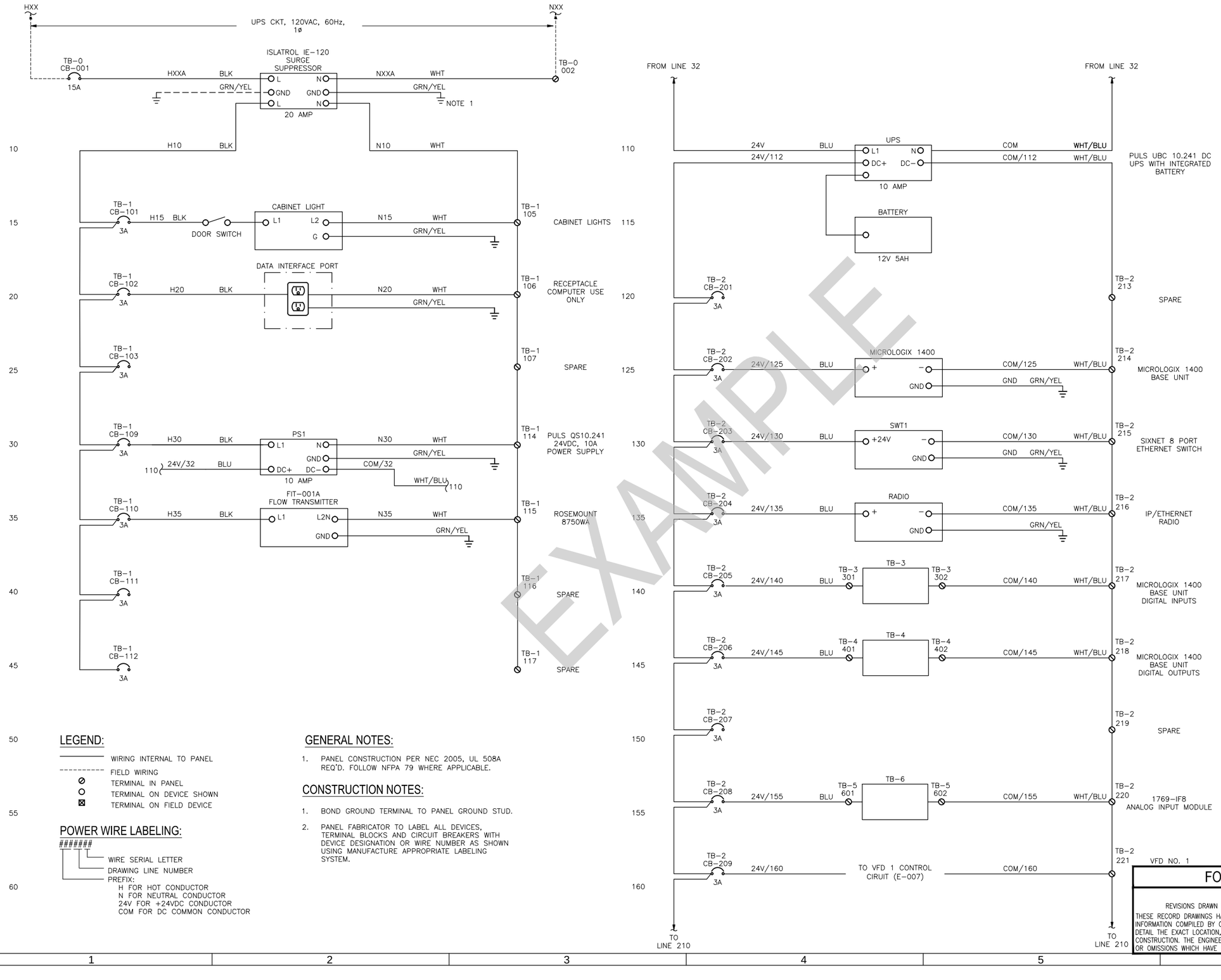

LEGEND:

- WIRING INTERNAL TO PANEL
- FIELD WIRING
- TERMINAL IN PANEL
- TERMINAL ON DEVICE SHOWN
- TERMINAL ON FIELD DEVICE

POWER WIRE LABELING:

#######

- WIRE SERIAL LETTER
- DRAWING LINE NUMBER
- PREFIX:
  - H FOR HOT CONDUCTOR
  - N FOR NEUTRAL CONDUCTOR
  - 24V FOR +24VDC CONDUCTOR
  - COM FOR DC COMMON CONDUCTOR

GENERAL NOTES:

1. PANEL CONSTRUCTION PER NEC 2005, UL 508A REQ'D. FOLLOW NFPA 79 WHERE APPLICABLE.

CONSTRUCTION NOTES:

1. BOND GROUND TERMINAL TO PANEL GROUND STUD.
2. PANEL FABRICATOR TO LABEL ALL DEVICES, TERMINAL BLOCKS AND CIRCUIT BREAKERS WITH DEVICE DESIGNATION OR WIRE NUMBER AS SHOWN USING MANUFACTURE APPROPRIATE LABELING SYSTEM.

EXAMPLE

FOR SEALS AND SIGNATURES

(PROJECT NAME) CNTR PNL TYPE B TEMPLATE

(50 I/Os) PWR WIRING SCHEMATIC

DESCHUTES COUNTY, OREGON

REVISIONS:

(CONSULTANT ENGINEER NAME, ADDRESS & PHONE NUMBER)

DESIGNED BY: XXX
DRAWN BY: XXX
SCALE: NONE
FILE: I-004.dwg
DATE:

VERIFY SCALES
0 1"
BAR EQUALS ONE INCH ON ORIGINAL DRAWING

SHEET: I-004

COB # (XXXXXX)

FOR SAMPLE ONLY

RECORD DRAWINGS

REVISIONS DRAWN BY: XX DATE: XX/XX/XX

THESE RECORD DRAWINGS HAVE BEEN PREPARED, IN PART, ON THE BASIS OF INFORMATION COMPILED BY OTHERS. THEY ARE NOT INTENDED TO REPRESENT IN DETAIL THE EXACT LOCATION, TYPE OF COMPONENT NOR MANNER OF CONSTRUCTION. THE ENGINEER WILL NOT BE RESPONSIBLE FOR ANY ERRORS OR OMISSIONS WHICH HAVE BEEN INCORPORATED INTO THE RECORD DRAWINGS.

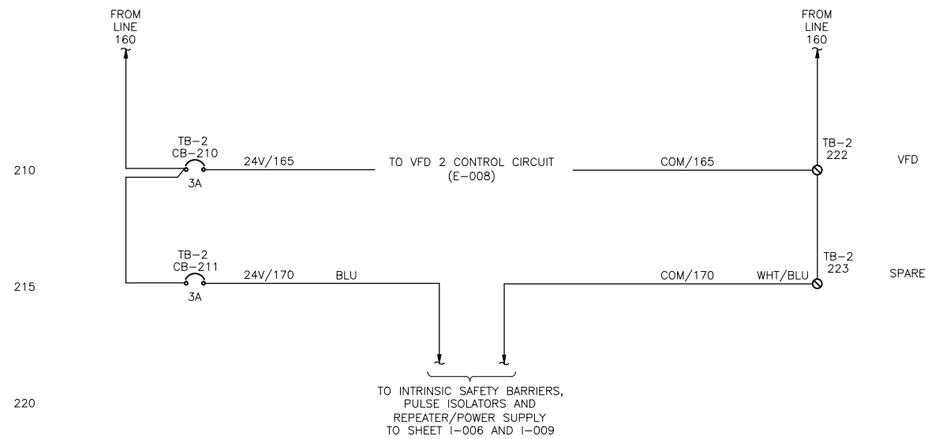

LEGEND:

- WIRING INTERNAL TO PANEL
- FIELD WIRING
- TERMINAL IN PANEL
- TERMINAL ON DEVICE SHOWN
- TERMINAL ON FIELD DEVICE

POWER WIRE LABELING:

#######

- WIRE SERIAL LETTER
- DRAWING LINE NUMBER
- PREFIX:
  - H FOR HOT CONDUCTOR
  - N FOR NEUTRAL CONDUCTOR
  - 24V FOR +24VDC CONDUCTOR
  - COM FOR DC COMMON CONDUCTOR

GENERAL NOTES:

1. PANEL CONSTRUCTION PER NEC, UL 508A REQ'D. FOLLOW NFPA 79 WHERE APPLICABLE.

CONSTRUCTION NOTES:

1. BOND GROUND TERMINAL TO PANEL GROUND STUD.
2. PANEL FABRICATOR TO LABEL ALL DEVICES, TERMINAL BLOCKS AND CIRCUIT BREAKERS WITH DEVICE DESIGNATION OR WIRE NUMBER AS SHOWN USING MANUFACTURE APPROPRIATE LABELING SYSTEM.

EXAMPLE

FOR SAMPLE ONLY

RECORD DRAWINGS

REVISIONS DRAWN BY: XX DATE: XX/XX/XX

THESE RECORD DRAWINGS HAVE BEEN PREPARED, IN PART, ON THE BASIS OF INFORMATION COMPILED BY OTHERS. THEY ARE NOT INTENDED TO REPRESENT IN DETAIL THE EXACT LOCATION, TYPE OF COMPONENT NOR MANNER OF CONSTRUCTION. THE ENGINEER WILL NOT BE RESPONSIBLE FOR ANY ERRORS OR OMISSIONS WHICH HAVE BEEN INCORPORATED INTO THE RECORD DRAWINGS.

FOR SEALS AND SIGNATURES

(PROJECT NAME) CNTR PNL TYPE B TEMPLATE (50 I/Os) PWR WIRING SCHEMATIC

DESCHUTES COUNTY, OREGON

REVISIONS:

(CONSULTANT ENGINEER NAME, ADDRESS & PHONE NUMBER)

DESIGNED BY: XXX
DRAWN BY: XXX
SCALE: NONE
FILE: I-005.dwg
DATE:

VERIFY SCALES
0 1"
BAR EQUALS ONE INCH ON ORIGINAL DRAWING

SHEET: I-005

COB # (XXXXXX)

1	2	3	4	5	6
FIELD	WXXX–ICP–XXX				
	MAIN CONTROL CABINET	TERMINAL BLOCKS		PLC	

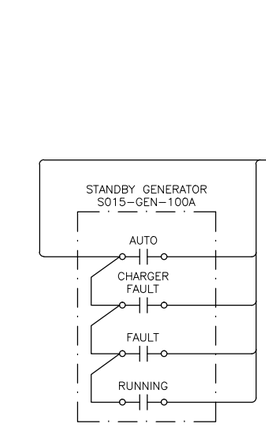

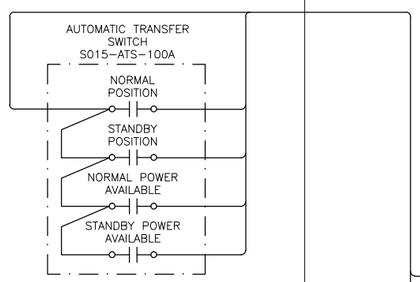

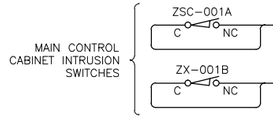

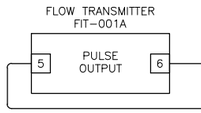

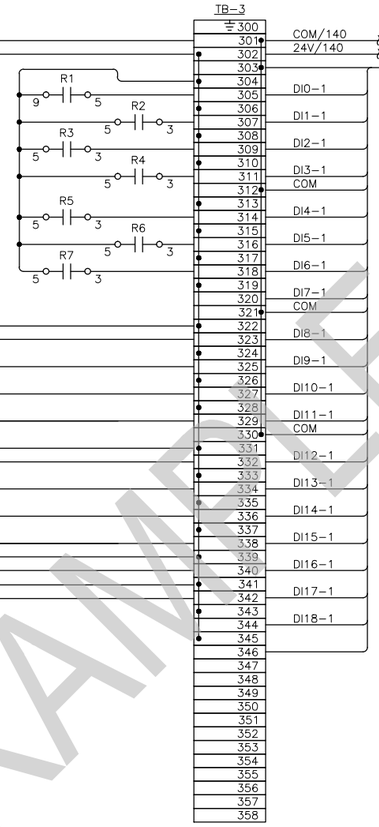

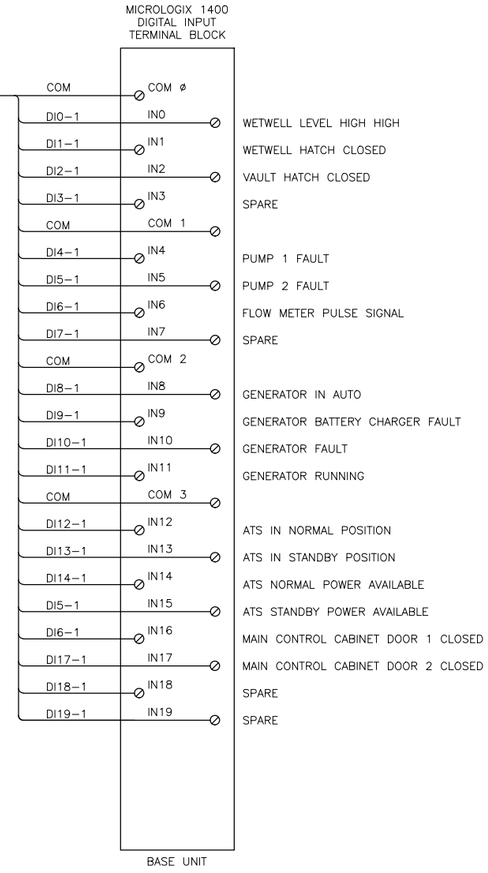

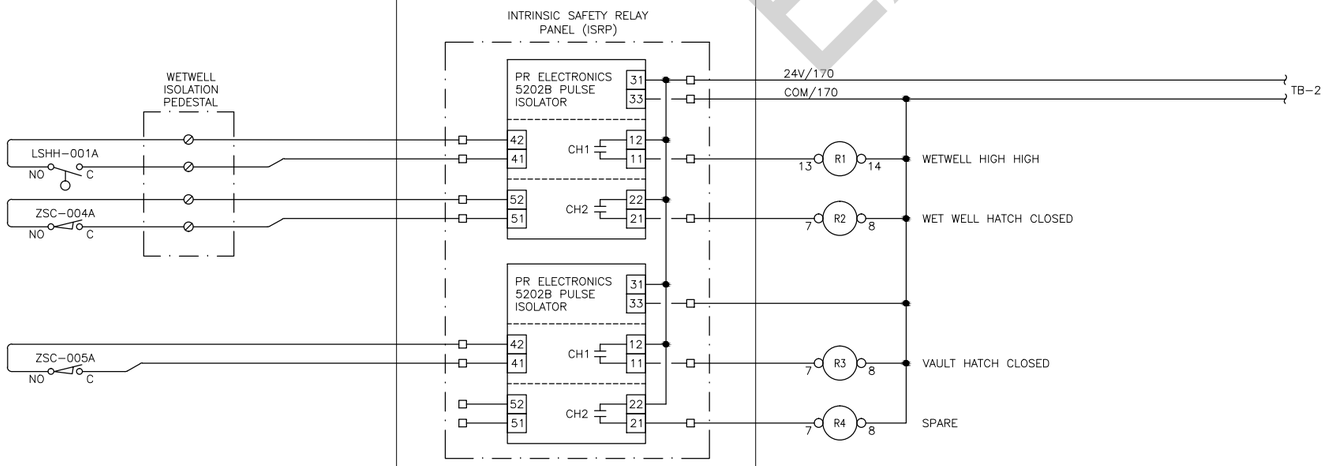

EXAMPLE

FOR SEALS AND SIGNATURES

(PROJECT NAME)
CNTR PNL TYPE B TEMPLATE
(50 I/Os) DIGITAL INPUT MODULE 1
DESCHUTES COUNTY, OREGON

REVISIONS:

(CONSULTANT ENGINEER NAME, ADDRESS & PHONE NUMBER)

DESIGNED BY: XXX
DRAWN BY: XXX
SCALE: NONE
FILE: I-006.dwg
DATE:

VERIFY SCALES
0 1"
BAR EQUALS ONE INCH ON ORIGINAL DRAWING

SHEET: I-006

COB # (XXXXXX)

FOR SAMPLE ONLY

RECORD DRAWINGS

REVISIONS DRAWN BY: XX DATE: XX/XX/XX

THESE RECORD DRAWINGS HAVE BEEN PREPARED, IN PART, ON THE BASIS OF INFORMATION COMPILED BY OTHERS. THEY ARE NOT INTENDED TO REPRESENT IN DETAIL THE EXACT LOCATION, TYPE OF COMPONENT NOR MANNER OF CONSTRUCTION. THE ENGINEER WILL NOT BE RESPONSIBLE FOR ANY ERRORS OR OMISSIONS WHICH HAVE BEEN INCORPORATED INTO THE RECORD DRAWINGS.

FIELD	MAIN CONTROL CABINET	WXXX–ICP–XXX	
		TERMINAL BLOCKS	PLC

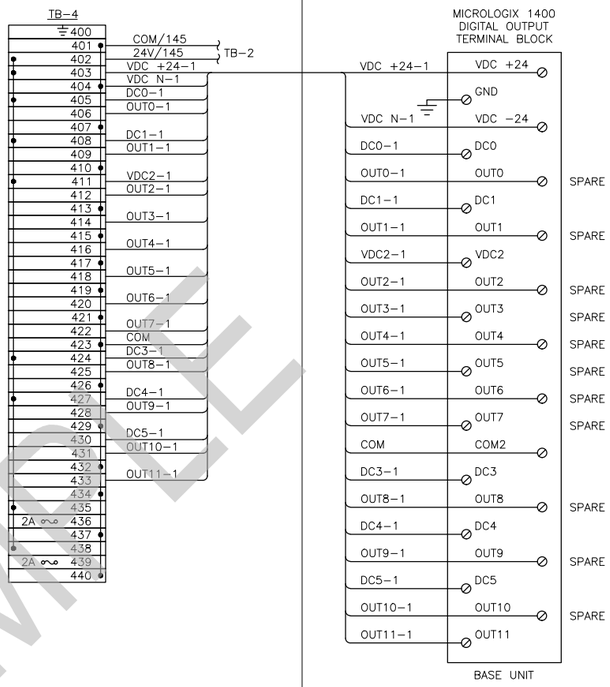

EXAMPLE

FOR SAMPLE ONLY

RECORD DRAWINGS

REVISIONS DRAWN BY: XX DATE: XX/XX/XX

THESE RECORD DRAWINGS HAVE BEEN PREPARED, IN PART, ON THE BASIS OF INFORMATION COMPILED BY OTHERS. THEY ARE NOT INTENDED TO REPRESENT IN DETAIL THE EXACT LOCATION, TYPE OF COMPONENT NOR MANNER OF CONSTRUCTION. THE ENGINEER WILL NOT BE RESPONSIBLE FOR ANY ERRORS OR OMISSIONS WHICH HAVE BEEN INCORPORATED INTO THE RECORD DRAWINGS.

FOR SEALS AND SIGNATURES

(PROJECT NAME)
CNTR PNL TYPE B TEMPLATE
(50 I/Os) DIGITAL INPUT MODULE 2

DESCHUTES COUNTY, OREGON

REVISIONS:

(CONSULTANT ENGINEER NAME, ADDRESS & PHONE NUMBER)

DESIGNED BY: XXX
DRAWN BY: XXX
SCALE: NONE
FILE: I-007.dwg
DATE:

VERIFY SCALES
0 1"
BAR EQUALS ONE INCH ON ORIGINAL DRAWING

SHEET: I-007

COB # (XXXXXX)

HAZARDOUS AREA | JUNCTION BOX | WXXX–ICP–XXX TERMINAL BLOCKS | PLC

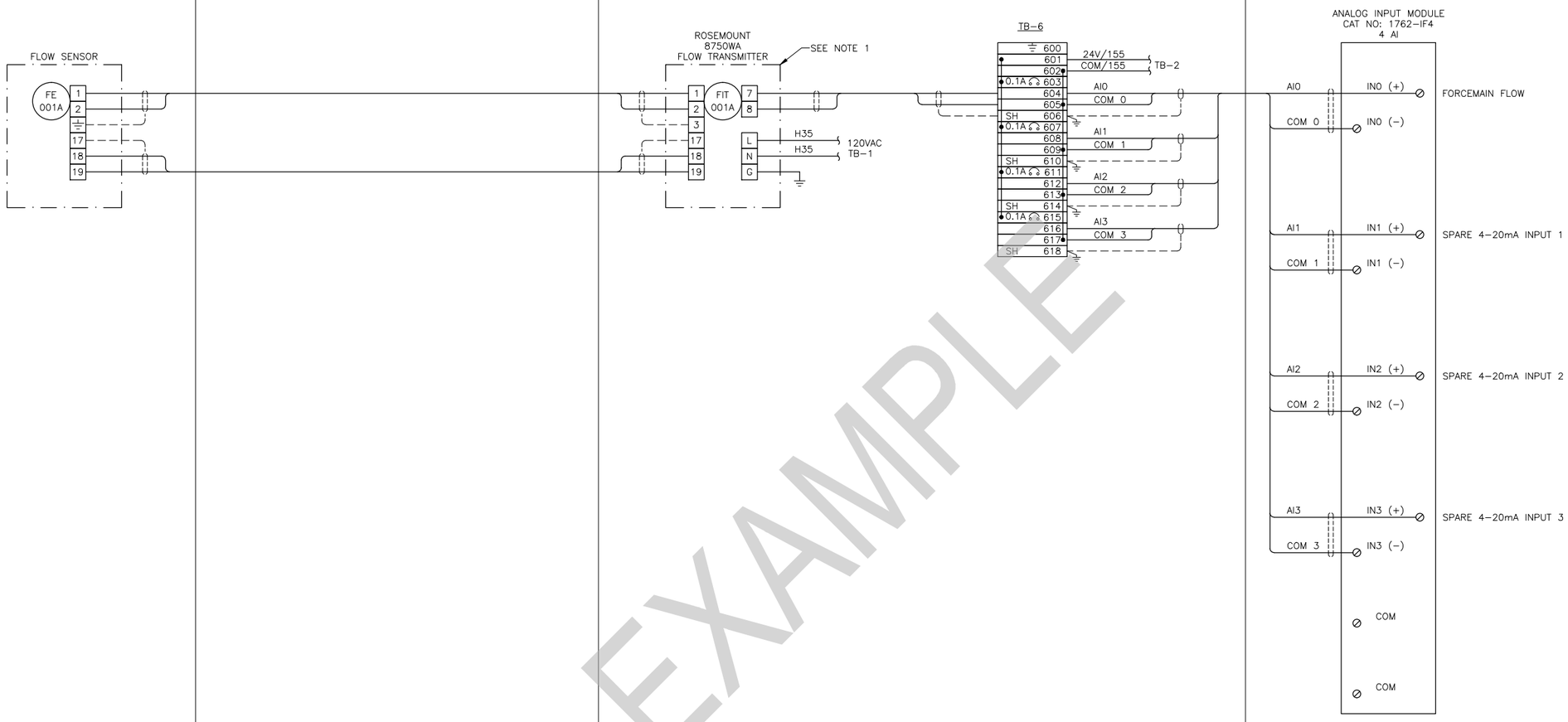

EXAMPLE

GENERAL NOTES

1. FLOW METER TO BE RATED FOR HAZARDOUS AREA.

FOR SAMPLE ONLY

RECORD DRAWINGS

REVISIONS DRAWN BY: XX DATE: XX/XX/XX

THESE RECORD DRAWINGS HAVE BEEN PREPARED, IN PART, ON THE BASIS OF INFORMATION COMPILED BY OTHERS. THEY ARE NOT INTENDED TO REPRESENT IN DETAIL THE EXACT LOCATION, TYPE OF COMPONENT NOR MANNER OF CONSTRUCTION. THE ENGINEER WILL NOT BE RESPONSIBLE FOR ANY ERRORS OR OMISSIONS WHICH HAVE BEEN INCORPORATED INTO THE RECORD DRAWINGS.

FOR SEALS AND SIGNATURES

(PROJECT NAME)
CNTR PNL TYPE B TEMPLATE
(50 I/Os) ANALOG INPUT MODULE
DESCHUTES COUNTY, OREGON

REVISIONS:

(CONSULTANT ENGINEER NAME, ADDRESS & PHONE NUMBER)

DESIGNED BY: XXX
DRAWN BY: XXX
SCALE: NONE
FILE: I-008.dwg
DATE:

VERIFY SCALES
0 1"
BAR EQUALS ONE INCH ON ORIGINAL DRAWING

SHEET: I-008

COB # (XXXXXX)

1	2	3	4	5	6
FIELD	JUNCTION BOX	MAIN CONTROL CABINET			

HAZARDOUS AREA

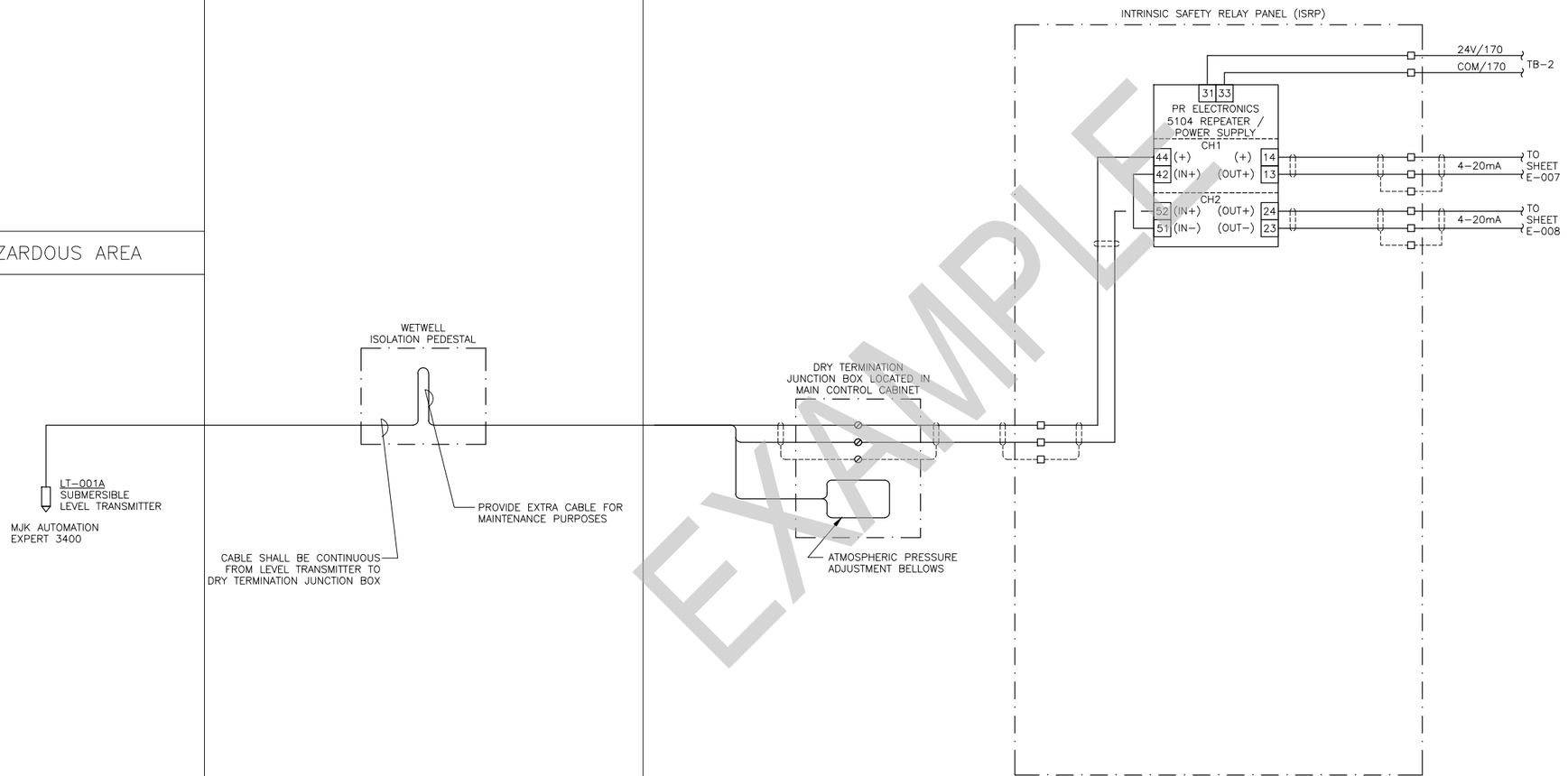

EXAMPLE

FOR SAMPLE ONLY

RECORD DRAWINGS

REVISIONS DRAWN BY: XX DATE: XX/XX/XX

THESE RECORD DRAWINGS HAVE BEEN PREPARED, IN PART, ON THE BASIS OF INFORMATION COMPILED BY OTHERS. THEY ARE NOT INTENDED TO REPRESENT IN DETAIL THE EXACT LOCATION, TYPE OF COMPONENT NOR MANNER OF CONSTRUCTION. THE ENGINEER WILL NOT BE RESPONSIBLE FOR ANY ERRORS OR OMISSIONS WHICH HAVE BEEN INCORPORATED INTO THE RECORD DRAWINGS.

FOR SEALS AND SIGNATURES

(PROJECT NAME)
INSTRUMENTATION & CONTROLS
INTRINSIC SAFETY RELAY PANEL (ISRP)
DESCHUTES COUNTY, OREGON

REVISIONS:

(CONSULTANT ENGINEER NAME, ADDRESS & PHONE NUMBER)

DESIGNED BY: XXX
DRAWN BY: XXX
SCALE: NONE
FILE: I-009.dwg
DATE:

VERIFY SCALES
0 1"
BAR EQUALS ONE INCH ON ORIGINAL DRAWING

SHEET: I-009

COB # (XXXXXX)

FIELD

WXXX–ICP–XXX

PLC CONTROL PANEL

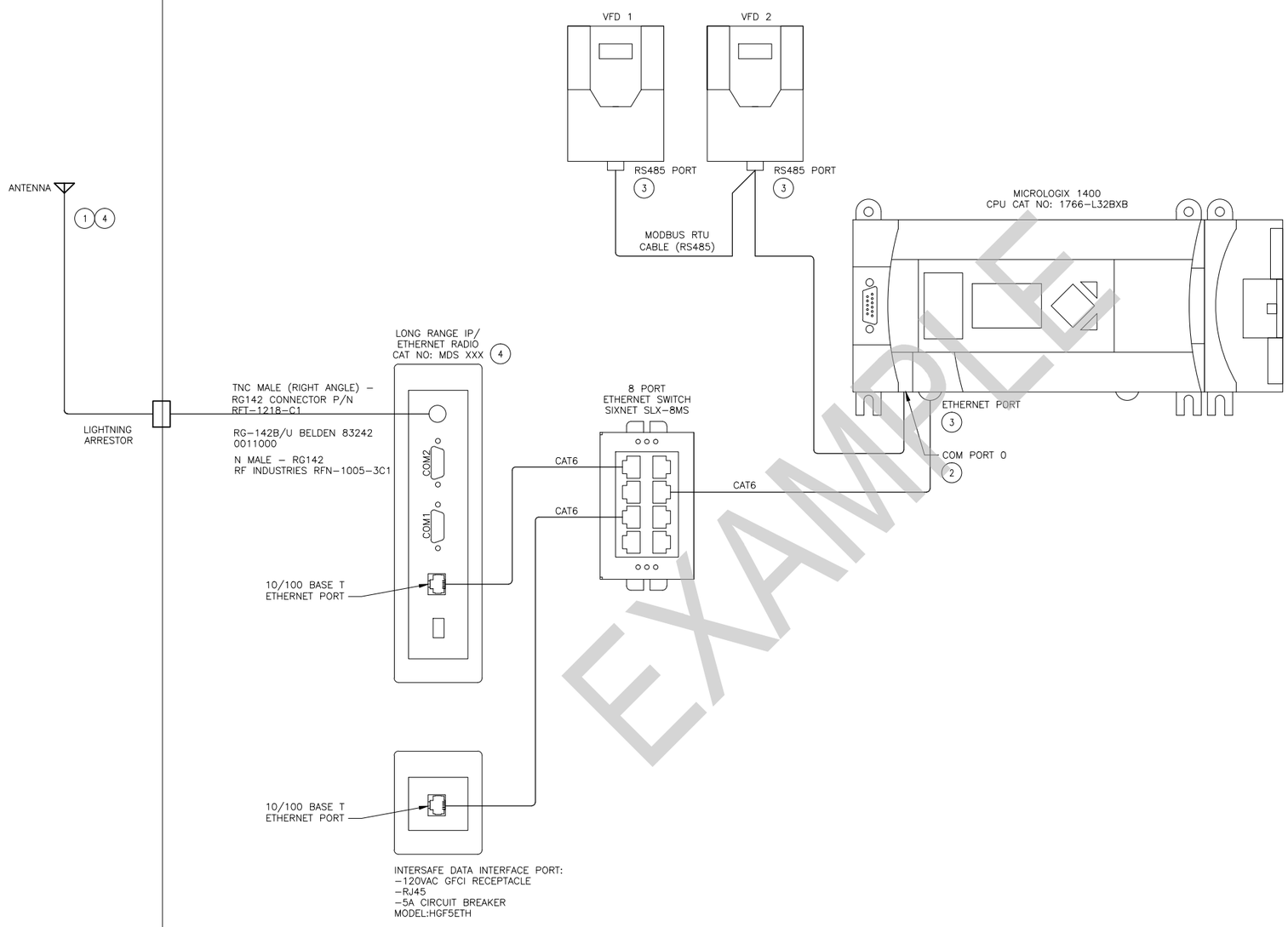

EXAMPLE

LEGEND:

——— COMMUNICATION WIRING

GENERAL NOTES:

1. PANEL FABRICATOR TO PROVIDE AND INSTALL ALL CABLES AS SHOWN ON DIAGRAM.
2. FOR DRAWING INDEX, SEE DRAWING X–XXX.
3. FOR GENERAL NOTES, ABBREVIATIONS, AND SYMBOL LEGENDS, SEE DRAWINGS X–XXX.

KEY NOTES:

(1) PULL ANTENNA GROUND WIRE IN MAST WITH ANTENNA COAX CABLE. TERMINATE ANTENNA GROUND ON MAIN CONTROL CABINET GROUND BUS.

(2) 8–PIN MINI DIN RS–232C/RS–485 CONNECTOR.

(3) RJ485 CONNECTOR. COMMUNICATIONS CABLE INTERCONNECTIONS SHALL BE AS REQUIRED TO MEET MANUFACTURER REQUIREMENTS.

(4) RADIO MAKE, MODEL, ANTENNA TYPE, AND ANTENNA CABLES TO BE DETERMINED BY CITY STAFF AND IS DEPENDENT ON SITE CONDITIONS AND LOCATION.

FOR SAMPLE ONLY

RECORD DRAWINGS

REVISIONS DRAWN BY: XX DATE: XX/XX/XX

THESE RECORD DRAWINGS HAVE BEEN PREPARED, IN PART, ON THE BASIS OF INFORMATION COMPILED BY OTHERS. THEY ARE NOT INTENDED TO REPRESENT IN DETAIL THE EXACT LOCATION, TYPE OF COMPONENT NOR MANNER OF CONSTRUCTION. THE ENGINEER WILL NOT BE RESPONSIBLE FOR ANY ERRORS OR OMISSIONS WHICH HAVE BEEN INCORPORATED INTO THE RECORD DRAWINGS.

FOR SEALS AND SIGNATURES

(PROJECT NAME)
CONTROL PANEL

COMMUNICATION NETWORK DIAGRAM

DESCHUTES COUNTY, OREGON

REVISIONS:

(CONSULTANT ENGINEER NAME, ADDRESS & PHONE NUMBER)

DESIGNED BY: XXX
DRAWN BY: XXX
SCALE: NONE
FILE: I-010.dwg
DATE:

VERIFY SCALES
0 1"
BAR EQUALS ONE INCH ON ORIGINAL DRAWING

SHEET: I-010

COB # (XXXXXX)

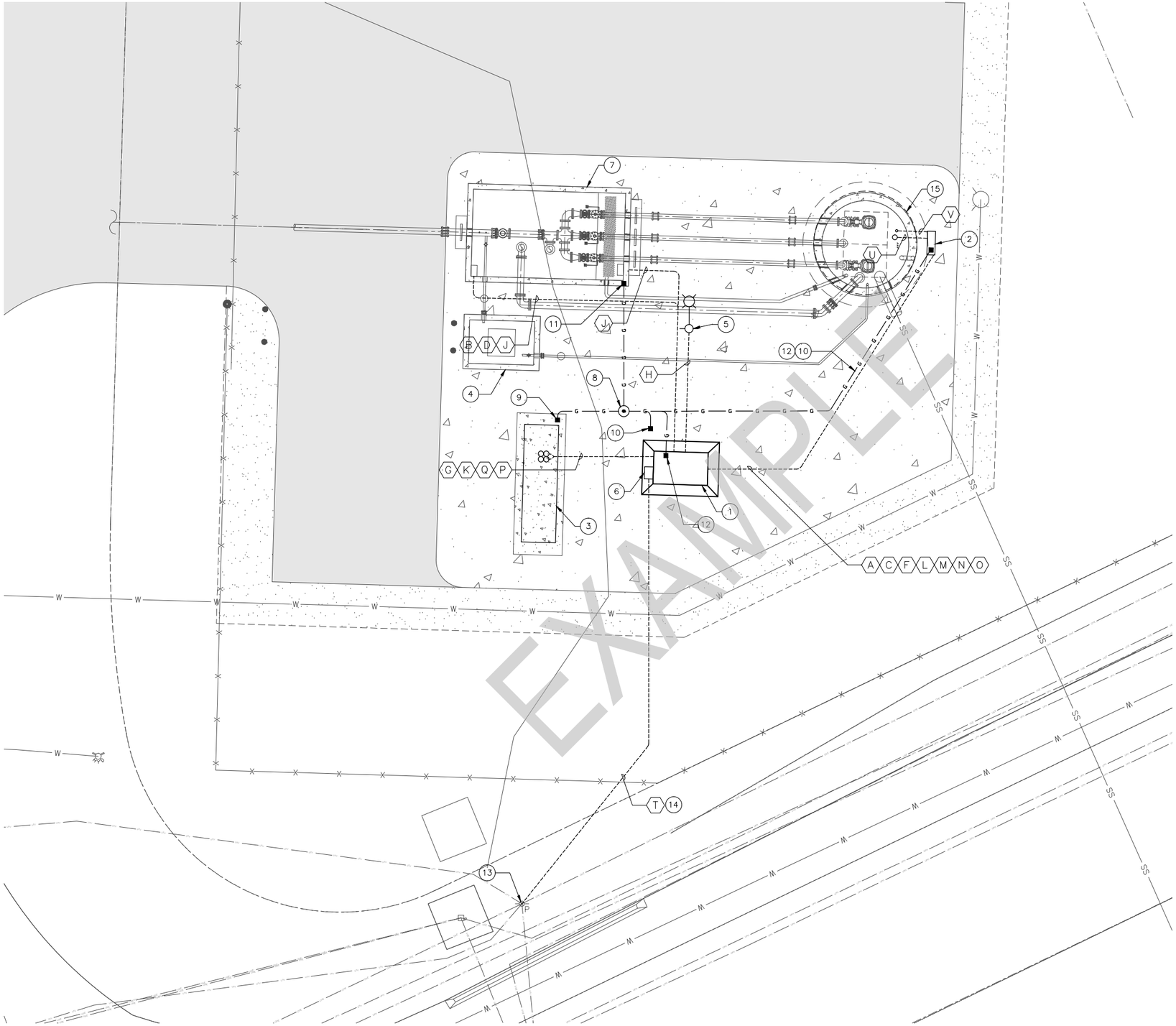

N

5 0 5

SCALE: 1"=5'

GENERAL NOTES:

1. ALL GROUNDING SHALL BE DONE IN ACCORDANCE WITH THE LATEST EDITION AND REVISION OF THE NATIONAL ELECTRIC CODE AND THE REGULATIONS OF THE STATE AND LOCAL CODES. ALL EQUIPMENT SHALL BE UNDERWRITER'S LABORATORY APPROVED. WHERE GROUND CABLES ARE EXPOSED THEY SHALL BE INSTALLED IN 1" DIA PVC SCHEDULE 80 CONDUIT FOR PHYSICAL PROTECTION.
2. PROVIDE #2/0 BARE COPPER GROUND WIRE UNLESS OTHERWISE NOTED.
3. (X) NOTES, SEE E-004

KEY NOTES:

1. MAIN CONTROL CABINET. SEE DWG E-002.
2. WETWELL ISOLATION PEDESTAL. SEE DWG E-005.
3. STANDBY GENERATOR WITH WEATHERPROOF, SOUND ATTENUATING ENCLOSURE. PROVIDE LOAD CALCULATION.
4. ODOR CONTROL VAULT. SEE CIVIL DRAWINGS.
5. SITE LIGHTING. LED AREA LIGHT WITH FOUNDATION AND SQUARE POLE. MAXIMUM FIXTURE HEIGHT OF 14 FT. CREE EDGW SERIES LOW PROFILE WITH 100 LED COUNT AND TYPE III MEDIUM DISTRIBUTION, OR APPROVED EQUAL.
6. ELECTRIC UTILITY METER AND MAIN CIRCUIT BREAKER.
7. VALVE VAULT, PRESSURE TRANSDUCER AND FLOW METER. SEE CIVIL DRAWINGS.
8. GROUND TEST WELL.
9. BOND GROUND WIRE TO GENERATOR PAD REBAR AND TO THE GENERATOR ENCLOSURE.
10. BOND GROUND WIRE TO EQUIPMENT PAD REBAR.
11. BOND GROUND WIRE.
12. BOND GROUND WIRE TO EQUIPMENT PANEL.
13. EXISTING UTILITY POLE.
14. CONTRACTOR SHALL COORDINATE WITH THE UTILITY COMPANY TO INSTALL THE ELECTRICAL SERVICE.
15. WET WELL IS CLASS I DIVISION I. ALL ELECTRICAL WIRING SHALL COMPLY WITH NEC ARCTICLE 500.

HAZARDOUS AREAS:

WET WELL INTERIOR	– CLASS I, DIVISION 1
WET WELL HATCH (3' HORIZONTAL X 1.5' VERTICAL)	– CLASS I, DIVISION 2
WIRE TRAY INTERIOR	– CLASS I, DIVISION 1
WIRE TRAY EXTERIOR (3' HORIZONTAL X 1.5' VERTICAL)	– CLASS I, DIVISION 2
VALVE VAULT INTERIOR	– CLASS I, DIVISION 1

SUBSURFACE AREAS ARE CONSIDERED UNCLASSIFIED UNLESS OTHERWISE NOTED

FOR SAMPLE ONLY

RECORD DRAWINGS

REVISIONS DRAWN BY: XX DATE: XX/XX/XX

THESE RECORD DRAWINGS HAVE BEEN PREPARED, IN PART, ON THE BASIS OF INFORMATION COMPILED BY OTHERS. THEY ARE NOT INTENDED TO REPRESENT IN DETAIL THE EXACT LOCATION, TYPE OF COMPONENT NOR MANNER OF CONSTRUCTION. THE ENGINEER WILL NOT BE RESPONSIBLE FOR ANY ERRORS OR OMISSIONS WHICH HAVE BEEN INCORPORATED INTO THE RECORD DRAWINGS.

FOR SEALS AND SIGNATURES

(PROJECT NAME)
ELECTRICAL

ELECTRICAL SITE PLAN

DESCHUTES COUNTY, OREGON

REVISIONS:

(CONSULTANT ENGINEER NAME, ADDRESS & PHONE NUMBER)

DESIGNED BY: XXX
DRAWN BY: XXX
SCALE: NONE
FILE: E-001.dwg
DATE:

VERIFY SCALES
0 1"
BAR EQUALS ONE INCH ON ORIGINAL DRAWING

SHEET:
E-001

COB # (XXXXXX)

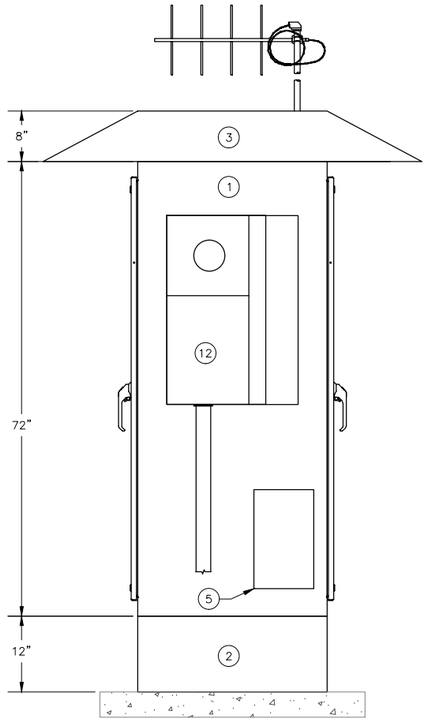

CABINET
LEFT EXTERIOR ELEVATION

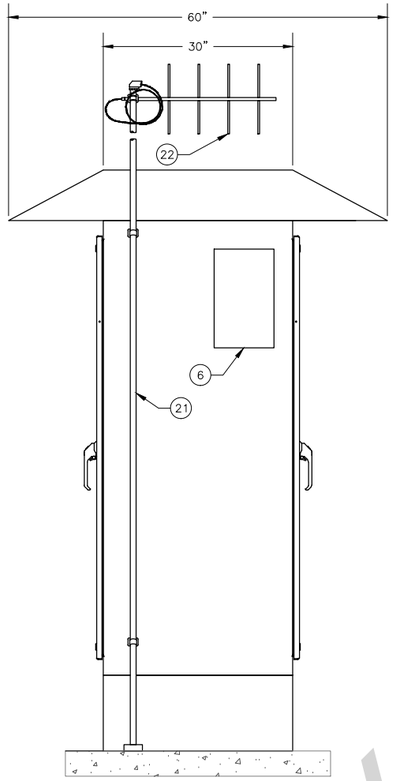

CABINET
RIGHT EXTERIOR ELEVATION

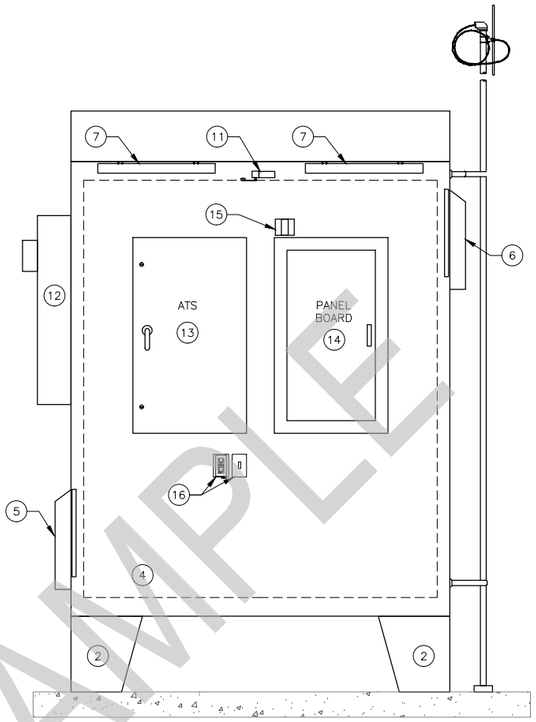

CABINET
FRONT INTERIOR ELEVATION

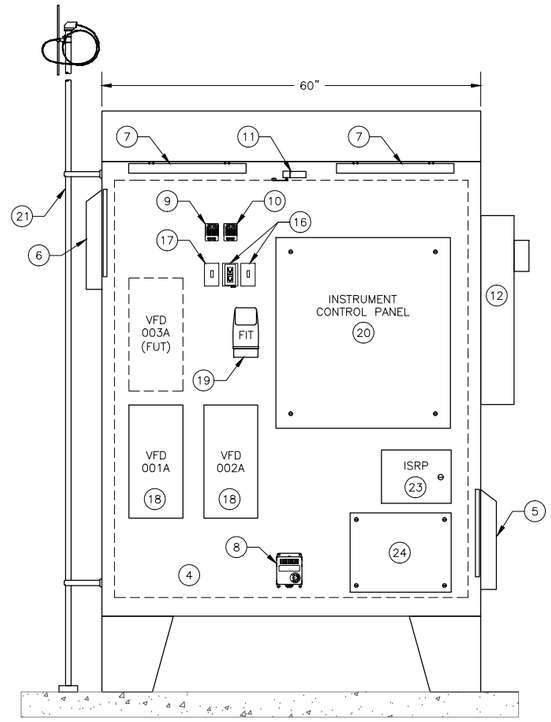

CABINET
BACK INTERIOR ELEVATION

KEY NOTES:

1. ENCLOSURE, 2-DOOR DUAL ACCESS
2. FLOOR STAND
3. RAINHOOD / SUNHOOD
4. MOUNTING PAN
5. COOLING FAN WITH FILTER
6. LOUVER WITH FILTER
7. CABINET LIGHT
8. CABINET HEATER
9. THERMOSTAT, COOLING
10. THERMOSTAT, HEATING
11. INTRUSION SWITCH
12. ELECTRIC SERVICE METER WITH MAIN BREAKER
13. AUTOMATIC TRANSFER SWITCH
14. PANEL BOARD
15. SURGE PROTECTION DEVICE
16. DUPLEX RECEPTACLE AND CABINET LIGHT SWITCH
17. LIGHT SWITCH, SITE LIGHT
18. SMARTRUN VFD
19. FLOW TRANSMITTER
20. INSTRUMENT CONTROL PANEL (ICP)
21. ANTENNA MAST, THREADED AT TOP WITH WEATHERHEAD
22. ANTENNA, NOTE 5
23. INTRINSIC SAFETY RELAY PANEL
24. LEVEL TRANSMITTER DRY TERMINATION J-BOX

CONSTRUCTION NOTES:

1. MAIN CONTROL CABINET SHALL BE NEMA 12 RATED, PAINTED STEEL WITH FLOOR STAND. CABINET DOORS SHALL BE FITTED WITH GASKETS, PADLOCKABLE HASPS, AND DOORS THAT LATCH OPEN. RAINHOOD/SUNHOOD SHALL BE CUSTOM FABRICATED FROM 12 GAUGE STEEL PAINTED WITH ANSI 61 LIGHT GREY POLYESTER POWDER FINISH TO MATCH ENCLOSURE.
2. PANEL CONSTRUCTION PER NEC AND UL508A REQUIREMENTS. FOLLOW NFPA 79 WHERE APPLICABLE. THE INTERIOR OF THE MAIN CONTROL CABINET SHALL BE DESIGNED AND FABRICATED TO MEET IP20 "FINGER-SAFE" REQUIREMENTS IN ACCORDANCE WITH IEC 60529; THERE SHALL BE NO EXPOSED LIVE PARTS AS DEFINED BY NFPA 70E. ALL INTERCONNECTIONS BETWEEN PANEL COMPONENTS INSIDE THE LARGER ELECTRICAL ENCLOSURE SHALL BE INSTALLED IN EMT, RGS, METAL WIREWAY, OR LIQUID TIGHT METALLIC FLEXIBLE CONDUIT.
3. NO PENETRATIONS THROUGH THE TOP OF THE ENCLOSURE ARE ALLOWED. ALL PENETRATIONS SHALL BE MADE WITH AN APPROVED FITTING AND GASKET.
4. DO NOT ROUTE 120VAC WIRING WITHING THE SAME RACEWAY AS DC ANALOG SIGNAL CABLES.
5. THE CITY OF BEND WILL DETERMINE THE RADIO TYPE, ANTENNA TYPE, MOUNTING HEIGHT, AND CABLE TYPE TO BE PROVIDED AND INSTALLED BY THE DEVELOPER. AT THE PRE-DESIGN STAGE, THE DEVELOPER SHALL COORDINATE FOR A TELEMETRY SIGNAL SURVEY TO BE PERFORMED WITH THE CITY OF BEND UTLITY DEPARTMENT AS REQUIRED TO DETERMINE RADIO COMMUNICATION EQUIPMENT REQUIREMENTS.
6. ALL UTILIZATION AND DISTRIBUTION EQUIPMENT, INCLUDING LIGHTING AND HEATING, SHALL BE WIRED FROM OR TO A SOURCE OTHER THAN THE PLC CONTROL PANEL. THIS REQUIRES A LOAD CENTER INSIDE THE MAIN CONTROL CABINET FOR POWER DISTRIBUTION.
7. EXCEPT AS OTHERWISE NOTED, PANEL WIRING SHALL BE AS FOLLOWS:
   - SINGLE WIRES SHALL BE THHN #16 AWG, EXCEPT WHERE INTENDED FOR POWER OR MOTOR CIRCUITS WHICH SHALL BE #14 AWG, MINIMUM.
   - COLOR CODE SHALL FOLLOW UL508A.
   - TWISTED PAIR ANALOG SIGNAL CABLE SHALL BE BELDEN 8760, OR EQUAL.
   - EACH WIRE SHALL BE IDENTIFIED WITH A PERMANENT WIRE LABEL, BRADY LAT-18-361.

1 - MAIN CONTROL CABINET LAYOUT ELEVATION
N.T.S.

FOR SAMPLE ONLY

RECORD DRAWINGS

REVISIONS DRAWN BY: XX DATE: XX/XX/XX

THESE RECORD DRAWINGS HAVE BEEN PREPARED, IN PART, ON THE BASIS OF INFORMATION COMPILED BY OTHERS. THEY ARE NOT INTENDED TO REPRESENT IN DETAIL THE EXACT LOCATION, TYPE OF COMPONENT NOR MANNER OF CONSTRUCTION. THE ENGINEER WILL NOT BE RESPONSIBLE FOR ANY ERRORS OR OMISSIONS WHICH HAVE BEEN INCORPORATED INTO THE RECORD DRAWINGS.

EXAMPLE

FOR SEALS AND SIGNATURES

(PROJECT NAME)
INSTRUMENTATION & CONTROLS
MAIN CONTROL CABINET LAYOUT
DESCHUTES COUNTY, OREGON

REVISIONS:

(CONSULTANT ENGINEER NAME, ADDRESS & PHONE NUMBER)

DESIGNED BY: XXX
DRAWN BY: XXX
SCALE: NONE
FILE: E-002.dwg
DATE:

VERIFY SCALES
0 1"
BAR EQUALS ONE INCH ON ORIGINAL DRAWING

SHEET: E-002

COB # (XXXXXX)

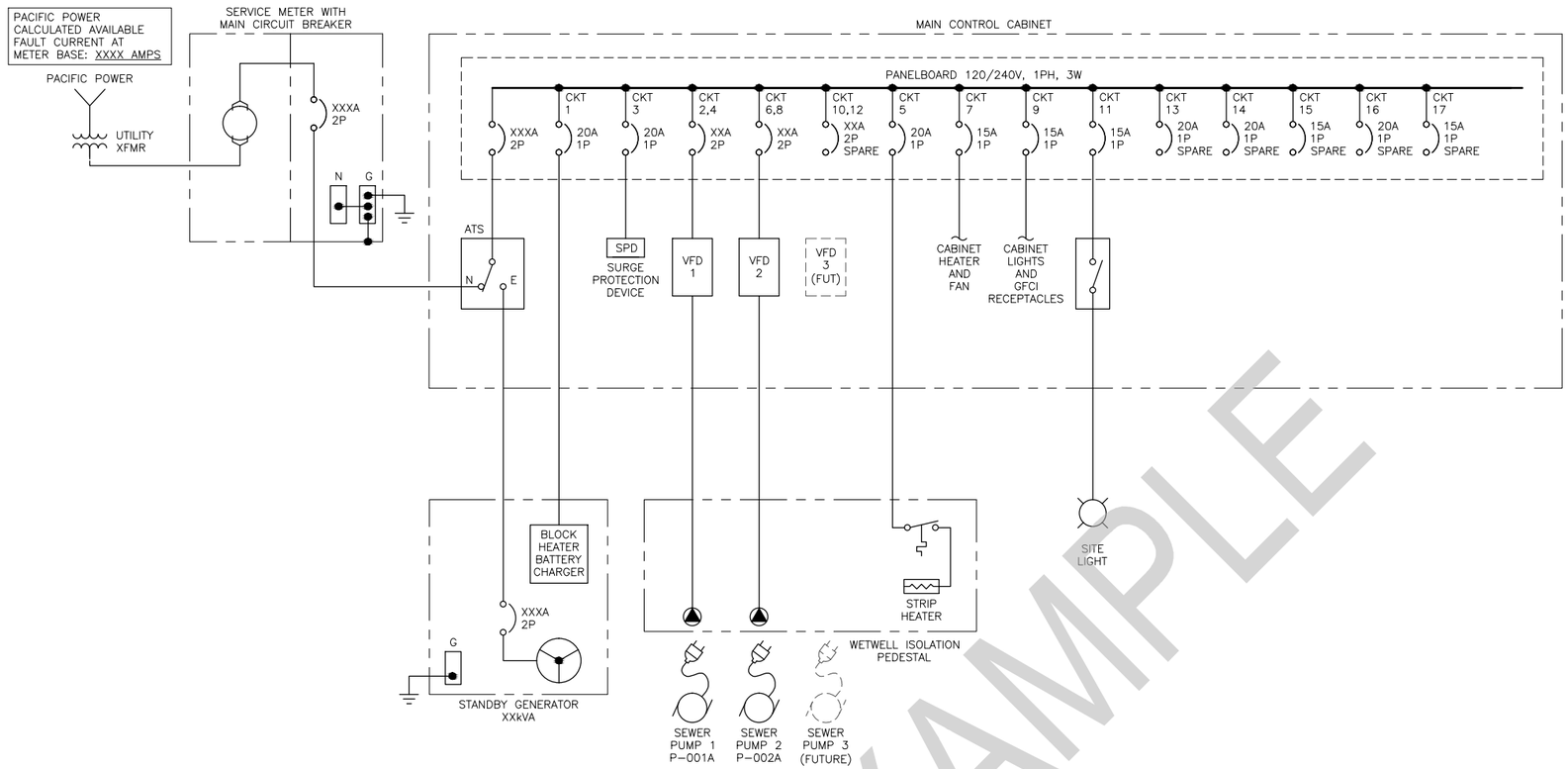

GENERAL NOTES:

1. ELECTRICAL SERVICE AND ELECTRICAL EQUIPMENT SHALL HAVE A MINIMUM OF 25% SPARE CAPACITY FOR FUTURE LOADS.
2. PANEL BOARD SHALL HAVE A MINIMUM OF 25% PREPARED CIRCUIT BREAKER SPACE FOR FUTURE LOADS.
3. POWER SUPPLY VOLTAGE AND PHASE SHALL BE SITE SPECIFIC AND BE APPROVED BY CITY STAFF.
4. VFD'S TO PROVIDE 3-PHASE POWER TO THE MOTOR FROM A SINGLE PHASE SOURCE.

LIFT STATION LOAD CHART (EXAMPLE)

LOAD DESCRIPTION	DUTY NO.	HP EACH	kVA EACH	TOTAL DUTY kVA	PLANT LOAD NO. kVA
PUMP 1	1	XX	XXX	XXX	XXX
PUMP 2	1	XX	XXX	XXX	XXX
PUMP 3 (FUTURE)		XX	XXX	XXX	XXX
GENERATOR BLOCK HEATER			XXX	XXX	XXX
CONTROL CABINET HEATER			XXX	XXX	XXX
ISOLATION HEAT			XXX	XXX	XXX
LOAD BANK HEAT			XXX	XXX	XXX
MISC LOAD			XXX	XXX	XXX
				TOTAL DUTY	DESIGN TOTAL
kVA SUBTOTAL				XXX	XXX
AMPS @240V, 3PH				XXX	XXX

GENERATOR LOAD TABLE (EXAMPLE)

LOAD REQUIREMENTS				PERFORMANCE REQUIREMENTS	
RUNNING kW	XXX			120/240V, 1PH, 3W	
RUNNING kVA	XXX			MAX VOLTAGE DIP	10%
RUNNING P.F.	XXX			MAX FREQUENCY DIP	2%
MAX START kW	XXX	IN STEP	2	MAX VOLTAGE HARMONIC DISTORTION	5%
MAX START kVA	XXX	IN STEP	2	MIN GENERATOR LOADED	30%
				MAX GENERATOR LOADED	100%
				TOTAL kW REQUIRED	XXX
				TOTAL AMPS REQUIRED	XXX

EXAMPLE

FOR SEALS AND SIGNATURES

(PROJECT NAME)
INSTRUMENTATION & CONTROLS
ELECTRICAL ONE LINE DIAGRAM
DESCHUTES COUNTY, OREGON

REVISIONS:

(CONSULTANT ENGINEER NAME, ADDRESS & PHONE NUMBER)

DESIGNED BY: XXX
DRAWN BY: XXX
SCALE: NONE
FILE: E-003.dwg
DATE:

VERIFY SCALES
0 1"
BAR EQUALS ONE INCH ON ORIGINAL DRAWING

SHEET: E-003

COB # (XXXXXX)

FOR SAMPLE ONLY

RECORD DRAWINGS
REVISIONS DRAWN BY: XX DATE: XX/XX/XX

THESE RECORD DRAWINGS HAVE BEEN PREPARED, IN PART, ON THE BASIS OF INFORMATION COMPILED BY OTHERS. THEY ARE NOT INTENDED TO REPRESENT IN DETAIL THE EXACT LOCATION, TYPE OF COMPONENT NOR MANNER OF CONSTRUCTION. THE ENGINEER WILL NOT BE RESPONSIBLE FOR ANY ERRORS OR OMISSIONS WHICH HAVE BEEN INCORPORATED INTO THE RECORD DRAWINGS.

CONDUIT AND WIRE SCHEDULE						
CONDUIT USE	CONDUIT DESIGNATION	CONDUIT SIZE	CONDUIT TYPE	CONDUCTOR SIZE AND NUMBER OF CONDUCTORS	CONDUIT FROM	CONDUIT TO
FLOAT SWITCH LSHH WETWELL HATCH LIMIT SWITCH	(A)	1 INCH	PVC	6#14	THE MAIN CONTROL CABINET	THE ISOLATION PEDESTAL
FLOW SENSOR	(B)	1 INCH	PVC	MANUFACTURER CABLE	THE MAIN CONTROL CABINET	THE FLOW METER VAULT
SUBMERSIBLE LEVEL TRANSMITTER	(C)	3/4 INCH	PVC	MANUFACTURER CABLE	THE MAIN CONTROL CABINET	THE ISOLATION PEDESTAL
VALVE VAULT HATCH LIMIT SWITCH	(D)	1 INCH	PVC	3#14	THE MAIN CONTROL CABINET	THE FLOW METER VAULT
SEAL FAIL / OVER TEMP	(E)	1 INCH	PVC	8#14	THE MAIN CONTROL CABINET	THE ISOLATION PEDESTAL
GENERATOR CONTROL SIGNALS (ATS)	(F)	1 INCH	PVC	8#14	THE MAIN CONTROL CABINET	THE GENERATOR
OUTSIDE AREA LIGHT	(G)	1 INCH	PVC	2#12, 1#12G	THE MAIN CONTROL CABINET	THE LIGHT POLE
VALVE VAULT SPARE	(H)	1 INCH	PVC	PULL CORD	THE MAIN CONTROL CABINET	THE VALVE VAULT
GENERATOR BATTERY CHARGER / BLOCK HEATER	(I)	1 INCH	PVC	4#10, 2#10G	THE MAIN CONTROL CABINET	THE GENERATOR
ISOLATION PEDESTAL HEATER	(J)	1 INCH	PVC	2#12, 1#12G	THE MAIN CONTROL CABINET	THE ISOLATION PEDESTAL
PUMP #1	(K)	1 INCH	PVC	3#8, 1#10G	THE MAIN CONTROL CABINET	THE ISOLATION PEDESTAL
PUMP #2	(L)	1 INCH	PVC	3#8, 1#10G	THE MAIN CONTROL CABINET	THE ISOLATION PEDESTAL
PUMP #3 (FUTURE)	(M)	1 INCH	PVC	3#8, 1#10G	THE MAIN CONTROL CABINET	THE ISOLATION PEDESTAL
GENERATOR MONITORING SIGNALS (PLC)	(N)	1 INCH	PVC	8#14	THE MAIN CONTROL CABINET	THE GENERATOR
GENERATOR POWER	(O)	2 INCH	PVC	3#1/0, 1#6G	THE MAIN CONTROL CABINET	THE GENERATOR
UNDERGROUND SERVICE	(P)	3 INCH	PVC	PULL ROPE	UNDERGROUND SERVICE	MAIN CONTROL ENCLOSURE PAD
SUBMERSIBLE LEVEL TRANSMITTER	(Q)	1 INCH	PGRC	MANUFACTURER CABLE	THE WET WELL	THE ISOLATION PEDESTAL
FLOAT SWITCH LSHH	(R)	3/4 INCH	PGRC	MANUFACTURER CABLE	THE WET WELL	THE ISOLATION PEDESTAL
ANTENNA SUPPORT	(W)	2 INCH	PGRC	MANUFACTURER CABLE	THE MAIN CONTROL CABINET	WEATHER HEAD

GENERAL NOTES: (CONDUIT INSTALLATION)

1. ALL STRUT AND MOUNTING HARDWARE MUST BE STAINLESS STEEL.
2. MYERS HUB FITTING MUST BE USED ON ALL CONDUIT PENETRATIONS.
3. ALL CONDUIT MUST BE SCHEDULE 80 PVC.
4. THE PROPER TOOLS MUST BE USED WHILE CUTTING, THREADING, BENDING, AND TIGHTENING ANY PVC COATED CONDUIT.
5. THE PVE COATING MUST REMAIN INTACT ONLY 1 INCH OF THE COATING MAY BE REMOVED AT THE END OF THE CONDUIT TO ALLOW FOR THE THREAD.
6. ANY CONDUIT WITH THE DAMAGED COATING MUST BE REPLACED.
7. THE COATING TOUCH UP PAINT IS ONLY TO BE USED FOR COSMETIC BLEMISHES.
8. ALL THREADED CONNECTIONS MUST BE COPPER COATED AND TIGHTENED APPROPRIATELY.
9. ALL UNDERGROUND CONDUIT RUNS MUST BE INSPECTED PRIOR TO BACKFILL.

EXAMPLE

FOR SEALS AND SIGNATURES

(PROJECT NAME)
INSTRUMENTATION & CONTROLS
CONDUIT AND WIRE SCHEDULE
DESCHUTES COUNTY, OREGON

REVISIONS:

(CONSULTANT ENGINEER NAME, ADDRESS & PHONE NUMBER)

DESIGNED BY: XXX
DRAWN BY: XXX
SCALE: NONE
FILE: E-004.dwg
DATE:

VERIFY SCALES
0 1"
BAR EQUALS ONE INCH ON ORIGINAL DRAWING

SHEET: E-004

COB # (XXXXXX)

FOR SAMPLE ONLY

RECORD DRAWINGS

REVISIONS DRAWN BY: XX DATE: XX/XX/XX

THESE RECORD DRAWINGS HAVE BEEN PREPARED, IN PART, ON THE BASIS OF INFORMATION COMPILED BY OTHERS. THEY ARE NOT INTENDED TO REPRESENT IN DETAIL THE EXACT LOCATION, TYPE OF COMPONENT NOR MANNER OF CONSTRUCTION. THE ENGINEER WILL NOT BE RESPONSIBLE FOR ANY ERRORS OR OMISSIONS WHICH HAVE BEEN INCORPORATED INTO THE RECORD DRAWINGS.

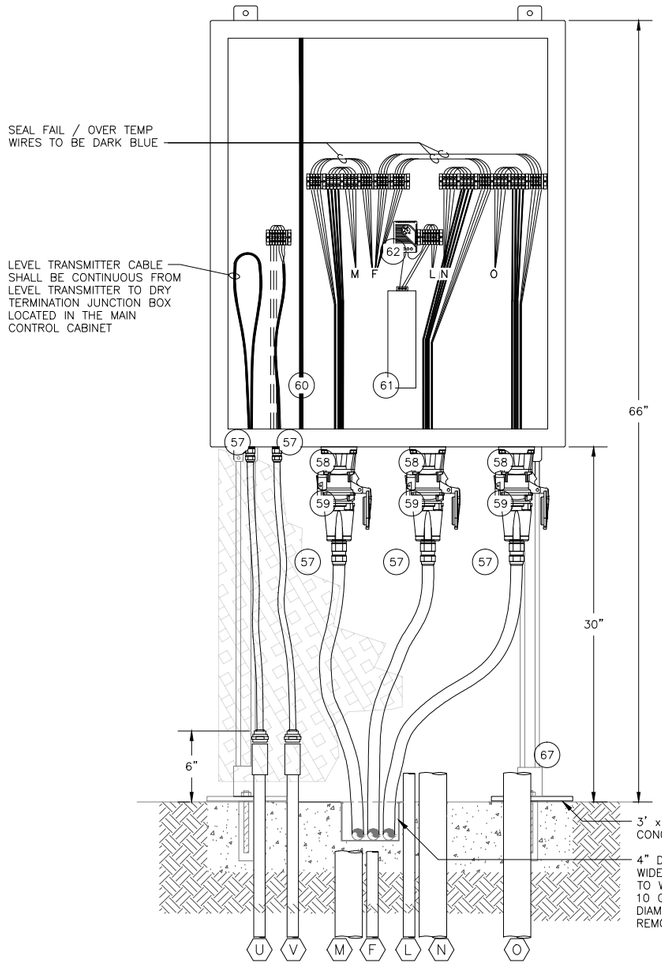

PEDESTAL ELEVATION

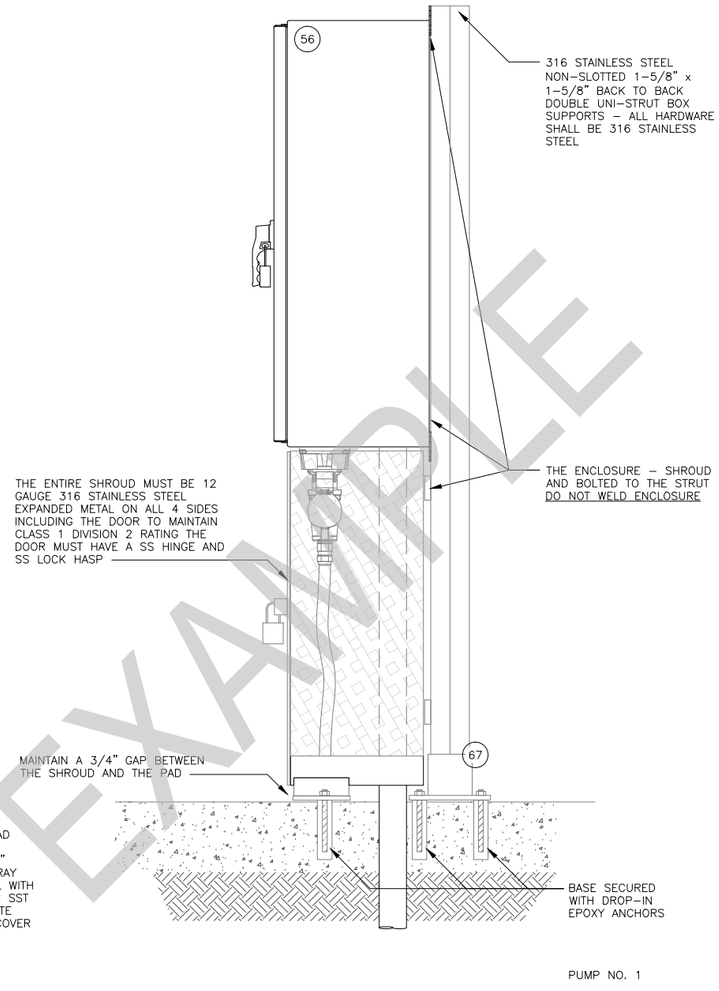

SIDE PEDESTAL FOOT MOUNTING

#	KEY NOTES:
56	ISOLATION PEDESTAL ENCLOSURE
57	CABLE SEAL
58	PUMP POWER RECEPTACLE
59	PUMP CORD CONNECTOR
60	ISOLATION PEDESTAL BARRIER
61	ISOLATION PEDESTAL HEATER
62	ISOLATION PEDESTAL HYGROSTAT
67	ISOLATION PEDESTAL POST BASE

X CONDUIT PENETRATIONS. SEE CONDUIT SCHEDULE SHEET E-004

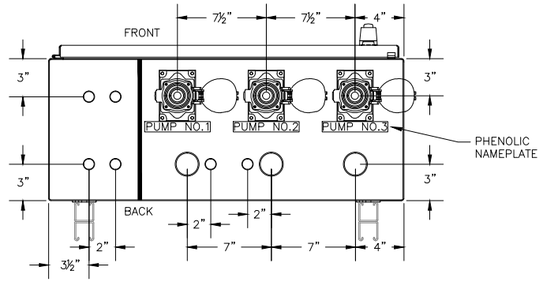

BOTTOM ENCLOSURE

1 WET WELL ISOLATION PEDESTAL ELEVATION
N.T.S.

EXAMPLE

FOR SAMPLE ONLY

RECORD DRAWINGS

REVISIONS DRAWN BY: XX DATE: XX/XX/XX

THESE RECORD DRAWINGS HAVE BEEN PREPARED, IN PART, ON THE BASIS OF INFORMATION COMPILED BY OTHERS. THEY ARE NOT INTENDED TO REPRESENT IN DETAIL THE EXACT LOCATION, TYPE OF COMPONENT NOR MANNER OF CONSTRUCTION. THE ENGINEER WILL NOT BE RESPONSIBLE FOR ANY ERRORS OR OMISSIONS WHICH HAVE BEEN INCORPORATED INTO THE RECORD DRAWINGS.

FOR SEALS AND SIGNATURES

(PROJECT NAME)
INSTRUMENTATION & CONTROLS
WETWELL ISOLATION PEDESTAL
DESCHUTES COUNTY, OREGON

REVISIONS:

(CONSULTANT ENGINEER NAME, ADDRESS & PHONE NUMBER)

DESIGNED BY: XXX
DRAWN BY: XXX
SCALE: NONE
FILE: E-005.dwg
DATE:

VERIFY SCALES
0 1"
BAR EQUALS ONE INCH ON ORIGINAL DRAWING

SHEET: E-005

COB # (XXXXXX)

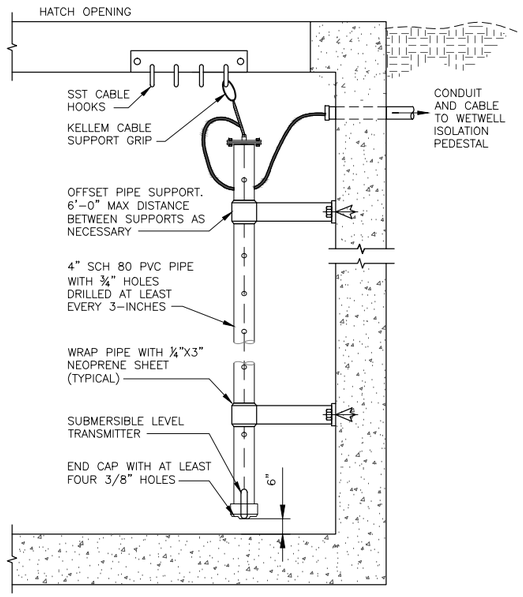

1 SUBMERSIBLE LEVEL TRANSMITTER

N.T.S.

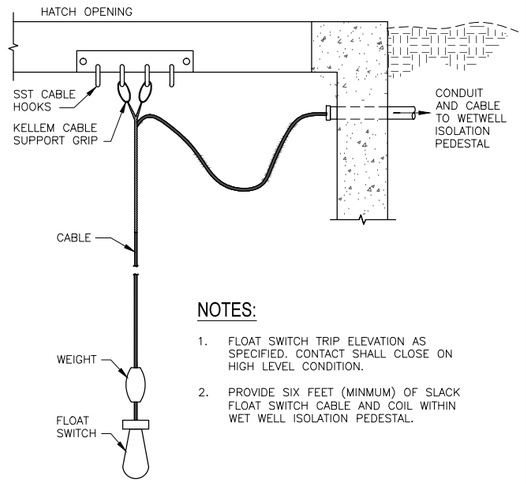

NOTES:

1. FLOAT SWITCH TRIP ELEVATION AS SPECIFIED. CONTACT SHALL CLOSE ON HIGH LEVEL CONDITION.
2. PROVIDE SIX FEET (MINIMUM) OF SLACK FLOAT SWITCH CABLE AND COIL WITHIN WET WELL ISOLATION PEDESTAL.

2 SUSPENDED FLOAT SWITCH

N.T.S.

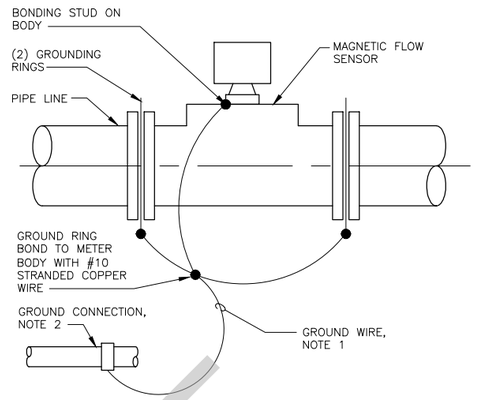

NOTES:

1. NO. 10 AWG INSULATED IF LENGTH IS LESS THA 6'. IF MORE THAN 6', INSTALL CONDUCTOR IN ¾" CONDUIT.
2. BOND MAGMETER TO ONE OF THE FOLLOWING ACCEPTABLE GROUNDS:
   A. POWER CIRCUIT GROUND CONDUCTOR AT TRANSMITTER.
   B. NEAREST AVAILABLE EQUIPMENT GROUND CONNECTION POINT.
   C. SEPARATE TAIL FROM EMBEDDED GROUND MAT.

3 MAGNETIC FLOW METER GROUNDING RING BONDING

N.T.S.

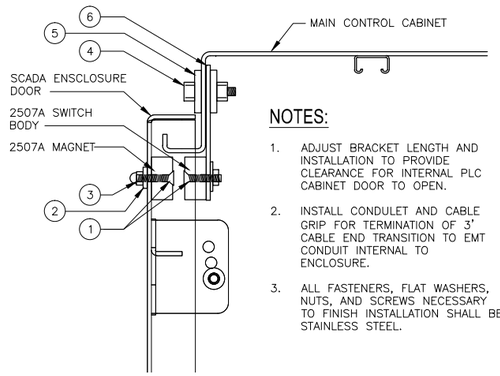

NOTES:

1. ADJUST BRACKET LENGTH AND INSTALLATION TO PROVIDE CLEARANCE FOR INTERNAL PLC CABINET DOOR TO OPEN.
2. INSTALL CONDULET AND CABLE GRIP FOR TERMINATION OF 3' CABLE END TRANSITION TO EMT CONDUIT INTERNAL TO ENCLOSURE.
3. ALL FASTENERS, FLAT WASHERS, NUTS, AND SCREWS NECESSARY TO FINISH INSTALLATION SHALL BE STAINLESS STEEL.

BILL OF MATERIALS	
ITEM	DESCRIPTION
1	8-32 ⅜" FLATHEAD MACHINE SCREW, STAINLESS STEEL
2	#8 BONDED SEALING WASHER, STAINLESS STEEL
3	8-32 ACORN NUT, STAINLESS STEEL
4	1/4"-28 x 3/4" HEX CAP SCREW, STAINLESS STEEL
5	1/4" BONDED SEALING WASHER, STAINLESS STEEL
6	ALUMINUM BRACKET, SHOP SUPPLIED

4 MAIN CONTROL CABINET INTRUSION SWITCH

N.T.S.

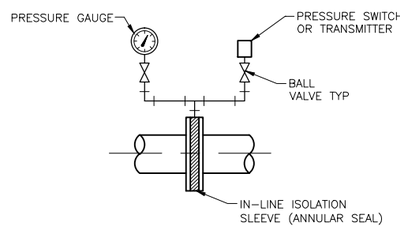

NOTES:

1. MOUNT PRESSURE GAUGE IN VERTICAL FOR VIEWING.
2. INDICATOR AND PRESSURE SWITCH INSTALLATION AS SPECIFIED FOR SINGLE INSTRUMENT INSTALLATIONS, MOUNT DEVICE DIRECTLY TO ANNULAR SEAL.

5 IN-LINE ISOLATION SLEEVE PRESSUSE SWITCH/TRANSMITTER

N.T.S.

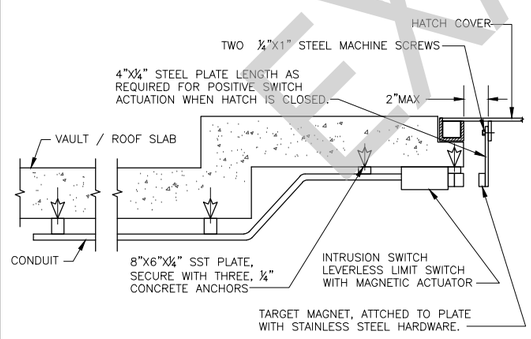

NOTES:

1. THE INSTALLATION DETAIL SHOWN IS GENERIC. ACTUAL INSTALLATIONS MAY VARY.

6 HATCH INTRUSION SWITCH INSTALLATION

N.T.S.

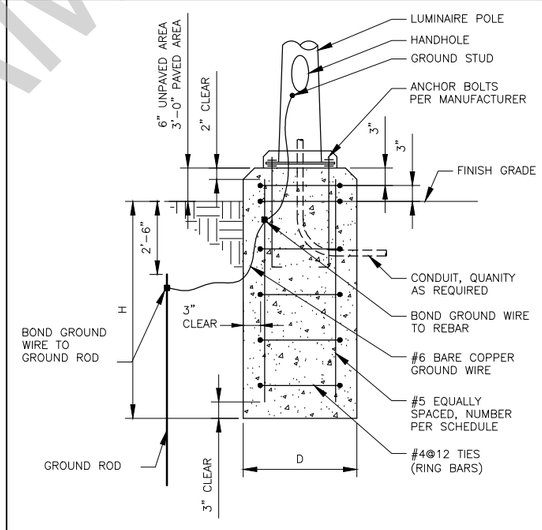

DIMENSION SCHEDULE			
POLE HEIGHT	MINIMUM D	MINIMUM H	VERTICAL REBAR EACH
UP TO 10'	2'-0"	4'-6"	6
11' TO 20'	2'-0"	6'-6"	6

7 LIGHT STANDARD BASE

N.T.S.

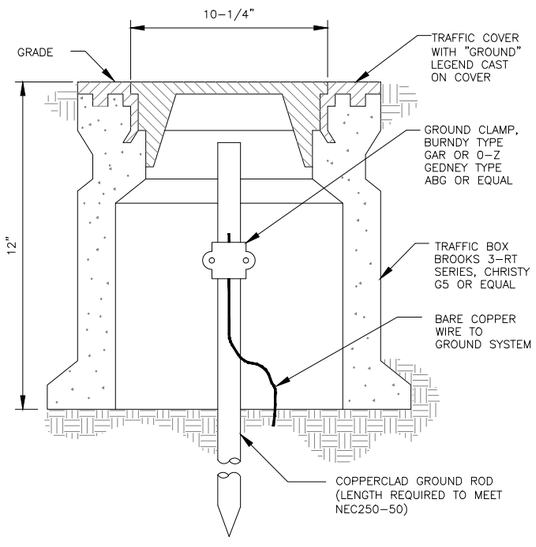

8 GROUND WELL AND ROD DETAIL

N.T.S.

FOR SAMPLE ONLY

RECORD DRAWINGS

REVISIONS DRAWN BY: XX DATE: XX/XX/XX

THESE RECORD DRAWINGS HAVE BEEN PREPARED, IN PART, ON THE BASIS OF INFORMATION COMPILED BY OTHERS. THEY ARE NOT INTENDED TO REPRESENT IN DETAIL THE EXACT LOCATION, TYPE OF COMPONENT NOR MANNER OF CONSTRUCTION. THE ENGINEER WILL NOT BE RESPONSIBLE FOR ANY ERRORS OR OMISSIONS WHICH HAVE BEEN INCORPORATED INTO THE RECORD DRAWINGS.

EXAMPLE

FOR SEALS AND SIGNATURES

(PROJECT NAME)
INSTRUMENTATION & CONTROLS

ELECTRICAL DETAILS

DESCHUTES COUNTY, OREGON

REVISIONS:

(CONSULTANT ENGINEER NAME, ADDRESS & PHONE NUMBER)

DESIGNED BY: XXX
DRAWN BY: XXX
SCALE: NONE
FILE: E-006.dwg
DATE:

VERIFY SCALES
0 1"
BAR EQUALS ONE INCH ON ORIGINAL DRAWING

SHEET:
E-006

COB # (XXXXXX)

SHEET X OF X

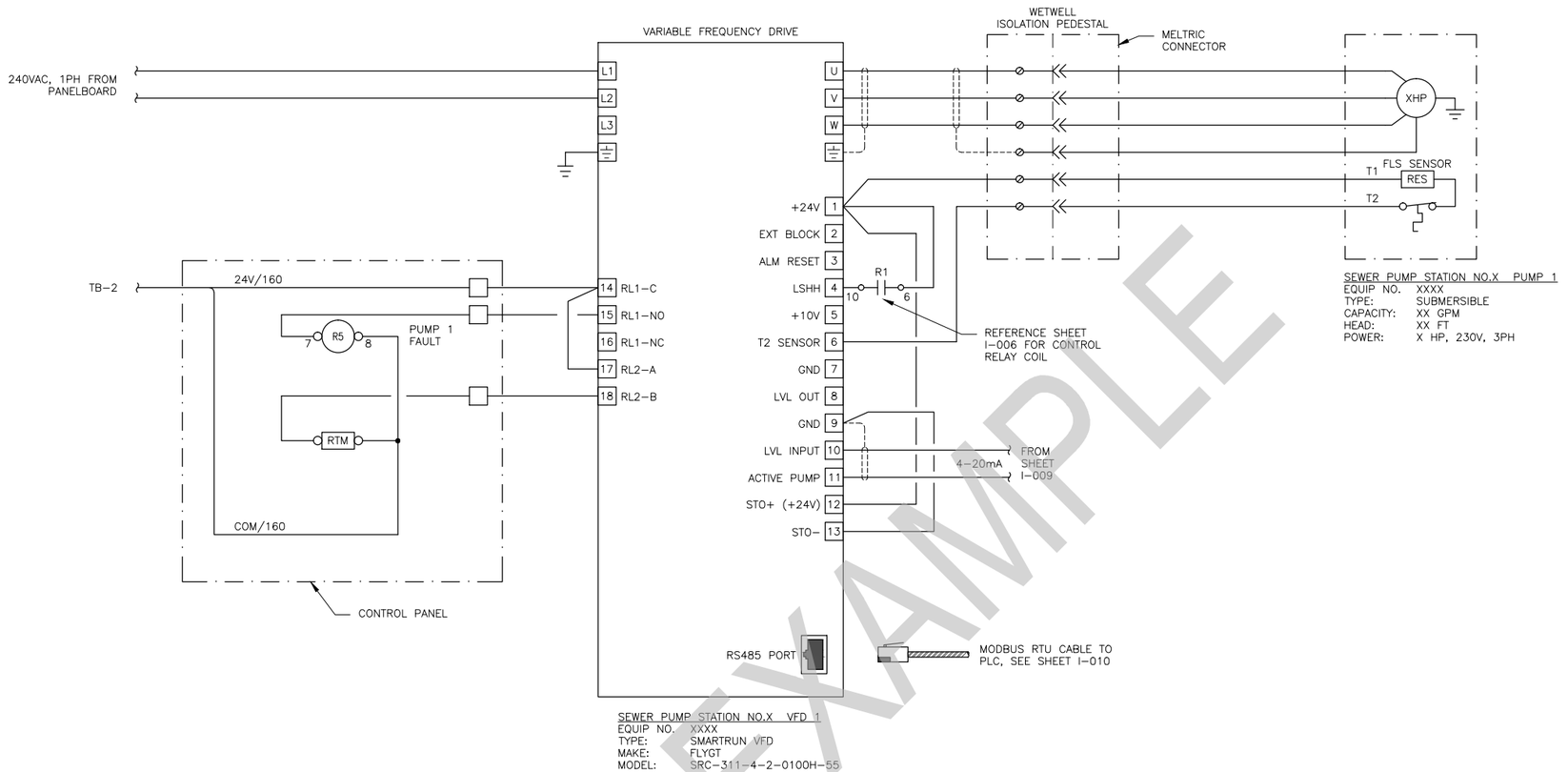

EXAMPLE

FOR SAMPLE ONLY

RECORD DRAWINGS

REVISIONS DRAWN BY: XX DATE: XX/XX/XX

THESE RECORD DRAWINGS HAVE BEEN PREPARED, IN PART, ON THE BASIS OF INFORMATION COMPILED BY OTHERS. THEY ARE NOT INTENDED TO REPRESENT IN DETAIL THE EXACT LOCATION, TYPE OF COMPONENT NOR MANNER OF CONSTRUCTION. THE ENGINEER WILL NOT BE RESPONSIBLE FOR ANY ERRORS OR OMISSIONS WHICH HAVE BEEN INCORPORATED INTO THE RECORD DRAWINGS.

FOR SEALS AND SIGNATURES

(PROJECT NAME) SEWER PUMNP STATION NO. X

PUMP 1 WIRING DIAGRAM

DESCHUTES COUNTY, OREGON

REVISIONS:

(CONSULTANT ENGINEER NAME, ADDRESS & PHONE NUMBER)

DESIGNED BY: XXX
DRAWN BY: XXX
SCALE: NONE
FILE: E-007.dwg
DATE:

VERIFY SCALES
0 1"
BAR EQUALS ONE INCH ON ORIGINAL DRAWING

SHEET: E-007

COB # (XXXXXX)

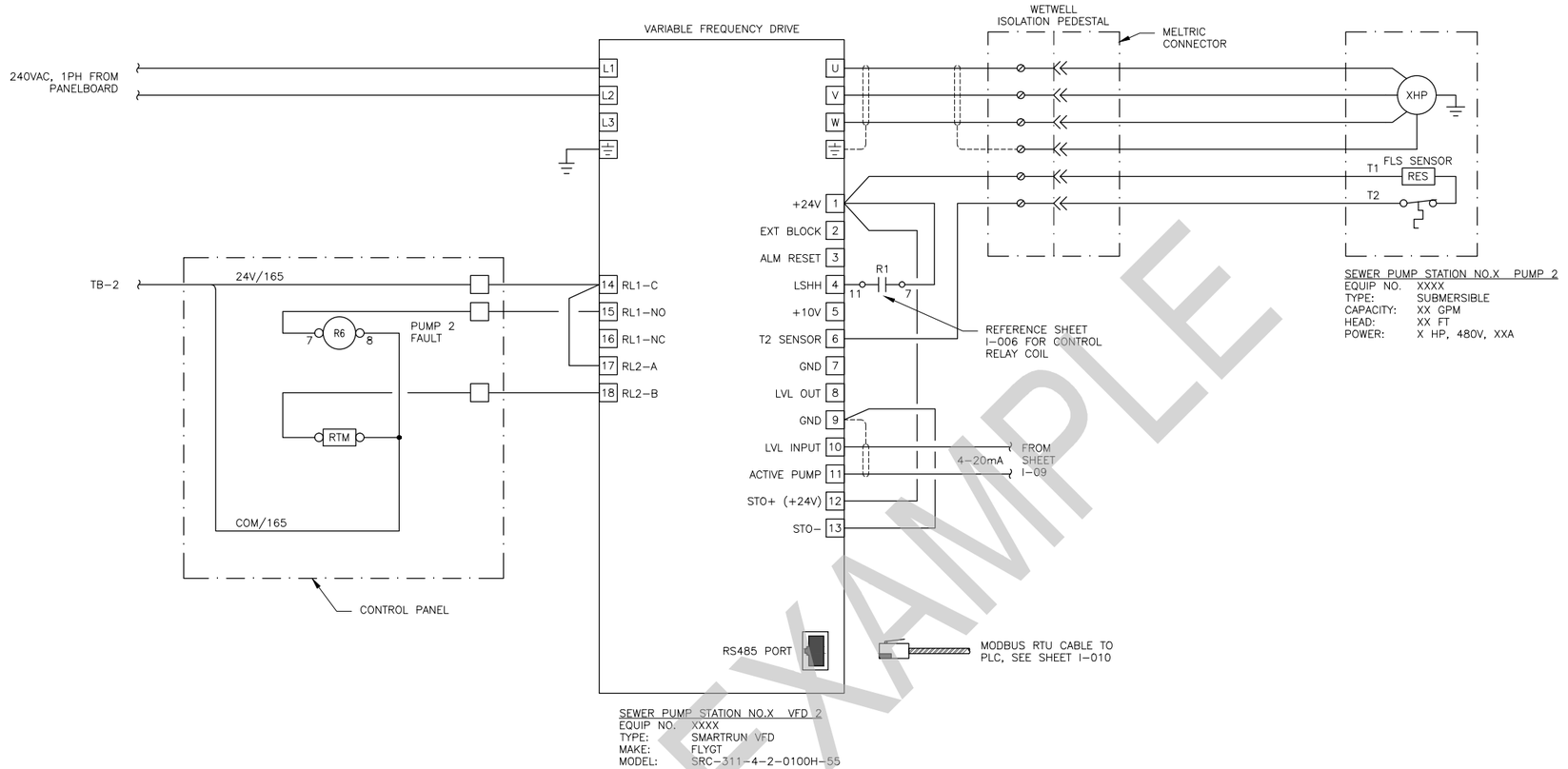

EXAMPLE

FOR SEALS AND SIGNATURES

(PROJECT NAME) SEWER PUMP STATION NO. X

PUMP 2 WIRING DIAGRAM

DESCHUTES COUNTY, OREGON

REVISIONS:

(CONSULTANT ENGINEER NAME, ADDRESS & PHONE NUMBER)

DESIGNED BY: XXX
DRAWN BY: XXX
SCALE: NONE
FILE: E-008.dwg
DATE:

VERIFY SCALES
0 1"
BAR EQUALS ONE INCH ON ORIGINAL DRAWING

SHEET: E-008

COB # (XXXXXX)

FOR SAMPLE ONLY

RECORD DRAWINGS

REVISIONS DRAWN BY: XX DATE: XX/XX/XX

THESE RECORD DRAWINGS HAVE BEEN PREPARED, IN PART, ON THE BASIS OF INFORMATION COMPILED BY OTHERS. THEY ARE NOT INTENDED TO REPRESENT IN DETAIL THE EXACT LOCATION, TYPE OF COMPONENT NOR MANNER OF CONSTRUCTION. THE ENGINEER WILL NOT BE RESPONSIBLE FOR ANY ERRORS OR OMISSIONS WHICH HAVE BEEN INCORPORATED INTO THE RECORD DRAWINGS.

FIELD

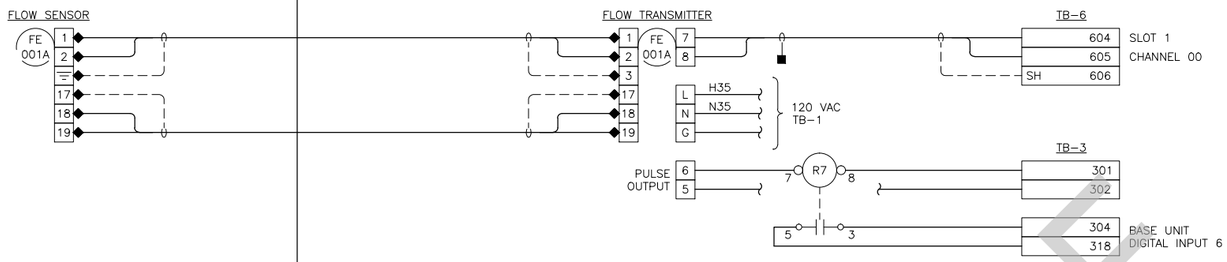

INSTRUMENT CONTROL PANEL
WXXX–ICP–XXX

SYSTEM CONFIGURATION

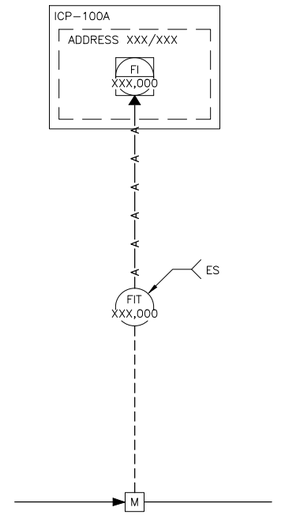

REFERENCES

GENERAL NOTES:

1. USE WIRE NUT TO EXTEND SHIELD TO INSTRUMENT GROUND.

LEGEND:

- ◆ CONTRACTOR TERMINATIONS (12 TERMINATIONS)
- ISOLATION VALVE
- CUT AND TAPE SHIELD

OPERATOR DISPLAY

TAG NAME: WXXX–XXX–XXX–XXX
FUNCTION: PRESSURE INDICATION
SCALE: 0–XXX PSI
ACTION: N/A
GRAPHIC: TBD

EXAMPLE

FOR SAMPLE ONLY

RECORD DRAWINGS

REVISIONS DRAWN BY: XX DATE: XX/XX/XX

THESE RECORD DRAWINGS HAVE BEEN PREPARED, IN PART, ON THE BASIS OF INFORMATION COMPILED BY OTHERS. THEY ARE NOT INTENDED TO REPRESENT IN DETAIL THE EXACT LOCATION, TYPE OF COMPONENT NOR MANNER OF CONSTRUCTION. THE ENGINEER WILL NOT BE RESPONSIBLE FOR ANY ERRORS OR OMISSIONS WHICH HAVE BEEN INCORPORATED INTO THE RECORD DRAWINGS.

FOR SEALS AND SIGNATURES

(PROJECT NAME)
INSTRUMENTATION & CONTROLS
PUMP STATION FLOW LOOP SHEET

DESCHUTES COUNTY, OREGON

REVISIONS:

(CONSULTANT ENGINEER NAME, ADDRESS & PHONE NUMBER)

DESIGNED BY: XXX
DRAWN BY: XXX
SCALE: NONE
FILE: E-009.dwg
DATE:

VERIFY SCALES
0 1"
BAR EQUALS ONE INCH ON ORIGINAL DRAWING

SHEET:
E-009

COB # (XXXXXX)

FIELD

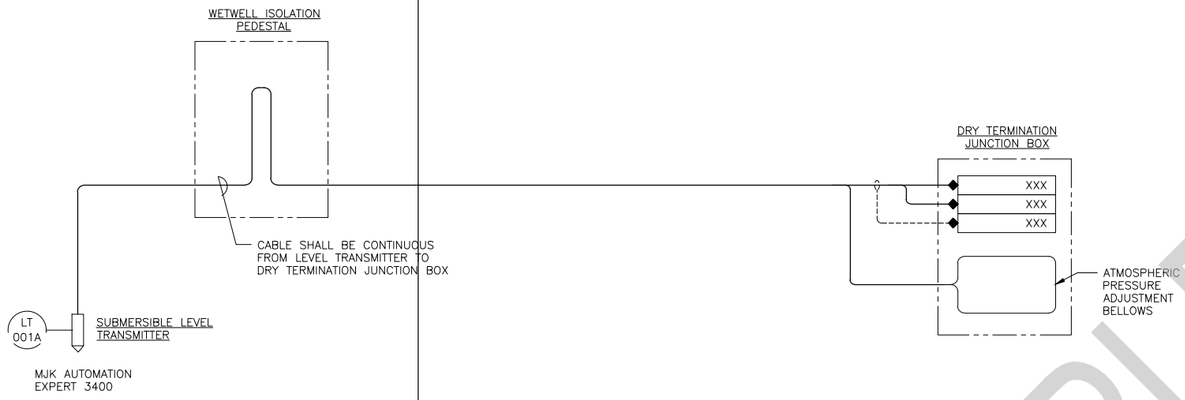

INSTRUMENT CONTROL PANEL
WXXX–ICP–XXX

SYSTEM CONFIGURATION

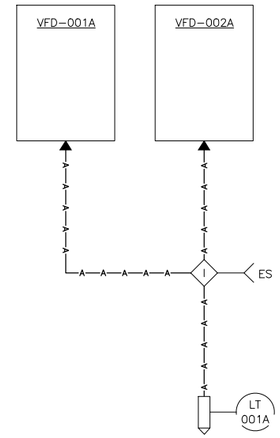

REFERENCES

GENERAL NOTES:

1. USE WIRE NUT TO EXTEND SHIELD TO INSTRUMENT GROUND.

LEGEND:

- ◆ CONTRACTOR TERMINATIONS (3 TERMINATIONS)
- ISOLATION VALVE
- CUT AND TAPE SHIELD

OPERATOR DISPLAY

TAG NAME: WXXX–XXX–XXX–XXX
FUNCTION: LEVEL INDICATION
SCALE: TBD
ACTION: N/A
GRAPHIC: TBD

EXAMPLE

FOR SEALS AND SIGNATURES

(PROJECT NAME)
INSTRUMENTATION & CONTROLS

WETWELL LEVEL LOOP SHEET

DESCHUTES COUNTY, OREGON

REVISIONS:

(CONSULTANT ENGINEER NAME, ADDRESS & PHONE NUMBER)

DESIGNED BY: XXX
DRAWN BY: XXX
SCALE: NONE
FILE: E-010.dwg
DATE:

VERIFY SCALES
0 1"
BAR EQUALS ONE INCH ON ORIGINAL DRAWING

SHEET: E-010

COB # (XXXXXX)

FOR SAMPLE ONLY

RECORD DRAWINGS

REVISIONS DRAWN BY: XX DATE: XX/XX/XX

THESE RECORD DRAWINGS HAVE BEEN PREPARED, IN PART, ON THE BASIS OF INFORMATION COMPILED BY OTHERS. THEY ARE NOT INTENDED TO REPRESENT IN DETAIL THE EXACT LOCATION, TYPE OF COMPONENT NOR MANNER OF CONSTRUCTION. THE ENGINEER WILL NOT BE RESPONSIBLE FOR ANY ERRORS OR OMISSIONS WHICH HAVE BEEN INCORPORATED INTO THE RECORD DRAWINGS.

FIELD	INSTRUMENT CONTROL PANEL WXXX–ICP–XXX	SYSTEM CONFIGURATION

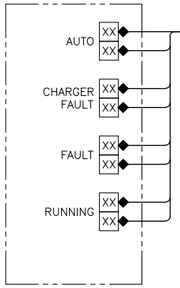

STANDBY GENERATOR X
S015–GEN–001A

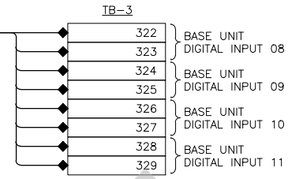

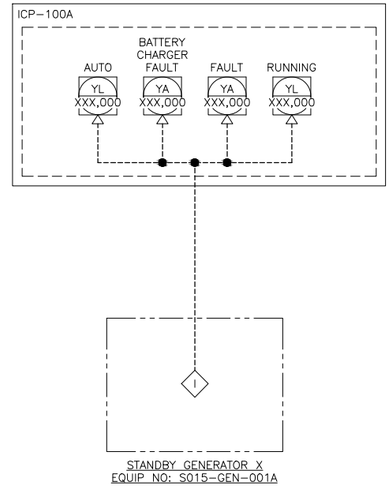

STANDBY GENERATOR X
EQUIP NO: S015–GEN–001A

REFERENCES

GENERAL NOTES:

1. USE WIRE NUT TO EXTEND SHIELD TO INSTRUMENT GROUND.

LEGEND:

- ◆ CONTRACTOR TERMINATIONS (16 TERMINATIONS)
- ISOLATION VALVE
- CUT AND TAPE SHIELD

OPERATOR DISPLAY

TAG NAME: WXXX–XXX–XXX–XXX
FUNCTION: STANDBY GENERATOR AUTO
SCALE: N/A
ACTION: CLOSE WHEN IN AUTO
GRAPHIC: TBD

TAG NAME: WXXX–XXX–XXX–XXX
FUNCTION: BATTERY CHARGER FAULT
SCALE: N/A
ACTION: OPEN ON FAULT CONDITION
GRAPHIC: TBD

TAG NAME: WXXX–XXX–XXX–XXX
FUNCTION: STANDBY GENERATOR FAULT
SCALE: N/A
ACTION: OPEN ON FAULT CONDITION
GRAPHIC: TBD

TAG NAME: WXXX–XXX–XXX–XXX
FUNCTION: STANDBY GENERATOR RUNNING
SCALE: N/A
ACTION: CLOSE ON RUNNING STATUS
GRAPHIC: TBD

FOR SAMPLE ONLY

RECORD DRAWINGS

REVISIONS DRAWN BY: XX DATE: XX/XX/XX

THESE RECORD DRAWINGS HAVE BEEN PREPARED, IN PART, ON THE BASIS OF INFORMATION COMPILED BY OTHERS. THEY ARE NOT INTENDED TO REPRESENT IN DETAIL THE EXACT LOCATION, TYPE OF COMPONENT NOR MANNER OF CONSTRUCTION. THE ENGINEER WILL NOT BE RESPONSIBLE FOR ANY ERRORS OR OMISSIONS WHICH HAVE BEEN INCORPORATED INTO THE RECORD DRAWINGS.

EXAMPLE

FOR SEALS AND SIGNATURES

(PROJECT NAME)
INSTRUMENTATION & CONTROLS
STANDBY GENERATOR LOOP SHEET
DESCHUTES COUNTY, OREGON

REVISIONS:

(CONSULTANT ENGINEER NAME, ADDRESS & PHONE NUMBER)

DESIGNED BY: XXX
DRAWN BY: XXX
SCALE: NONE
FILE: E-011.dwg
DATE:

VERIFY SCALES
0 1"
BAR EQUALS ONE INCH ON ORIGINAL DRAWING

SHEET:
E-011

COB # (XXXXXX)

FIELD

INSTRUMENT CONTROL PANEL
WXXX–ICP–XXX

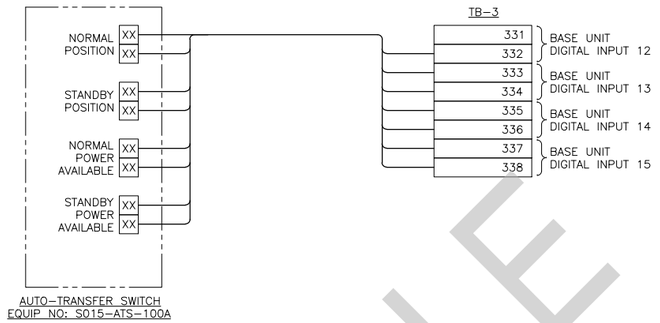

SYSTEM CONFIGURATION

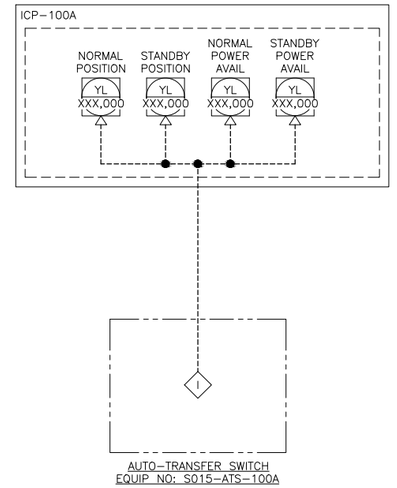

REFERENCES

GENERAL NOTES:

1. USE WIRE NUT TO EXTEND SHIELD TO INSTRUMENT GROUND.

LEGEND:

- ◆ CONTRACTOR TERMINATIONS (0 TERMINATIONS)
- ISOLATION VALVE
- CUT AND TAPE SHIELD

OPERATOR DISPLAY

TAG NAME: WXXX–XXX–XXX–XXX
FUNCTION: ATS NORMAL POSITION
SCALE: N/A
ACTION: CLOSE WHEN IN NORMAL POSITION
GRAPHIC: TBD

TAG NAME: WXXX–XXX–XXX–XXX
FUNCTION: ATS STANDBY POSITION
SCALE: N/A
ACTION: CLOSE WHEN IN STANDBY POSITION
GRAPHIC: TBD

TAG NAME: WXXX–XXX–XXX–XXX
FUNCTION: NORMAL POWER AVAILABLE
SCALE: N/A
ACTION: CLOSE WHEN NORMAL POWER AVAILABLE
GRAPHIC: TBD

TAG NAME: WXXX–XXX–XXX–XXX
FUNCTION: STANDBY POWER AVAILABLE
SCALE: N/A
ACTION: CLOSE WHEN STANDBY POWER AVAILABLE
GRAPHIC: TBD

FOR SAMPLE ONLY

RECORD DRAWINGS

REVISIONS DRAWN BY: XX DATE: XX/XX/XX

THESE RECORD DRAWINGS HAVE BEEN PREPARED, IN PART, ON THE BASIS OF INFORMATION COMPILED BY OTHERS. THEY ARE NOT INTENDED TO REPRESENT IN DETAIL THE EXACT LOCATION, TYPE OF COMPONENT NOR MANNER OF CONSTRUCTION. THE ENGINEER WILL NOT BE RESPONSIBLE FOR ANY ERRORS OR OMISSIONS WHICH HAVE BEEN INCORPORATED INTO THE RECORD DRAWINGS.

EXAMPLE

FOR SEALS AND SIGNATURES

(PROJECT NAME)
INSTRUMENTATION & CONTROLS
AUTO-TRANSFER SWITCH LOOP SHEET

DESCHUTES COUNTY, OREGON

REVISIONS:

(CONSULTANT ENGINEER NAME, ADDRESS & PHONE NUMBER)

DESIGNED BY: XXX
DRAWN BY: XXX
SCALE: NONE
FILE: E-012.dwg
DATE:

VERIFY SCALES
0 1"
BAR EQUALS ONE INCH ON ORIGINAL DRAWING

SHEET: E-012

COB # (XXXXXX)

FIELD

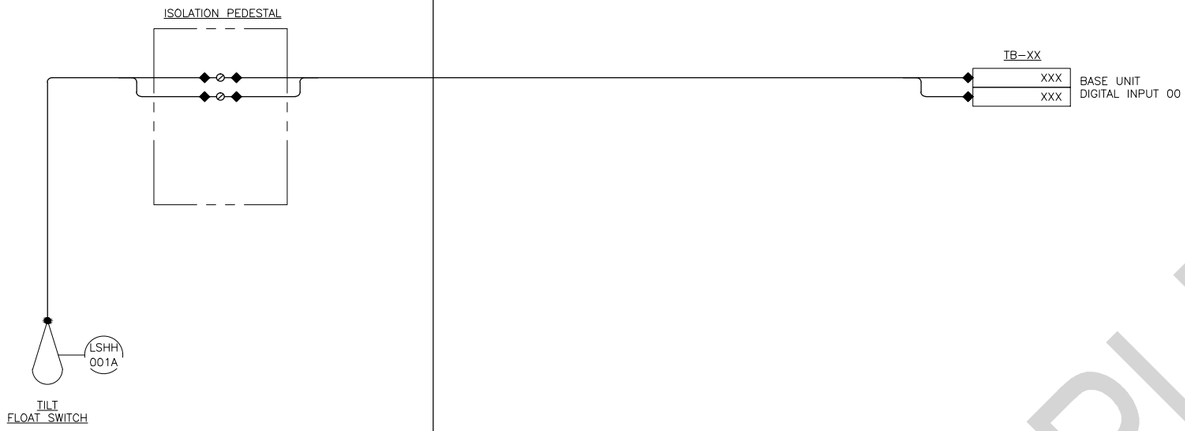

INSTRUMENT CONTROL PANEL
WXXX–ICP–XXX

SYSTEM CONFIGURATION

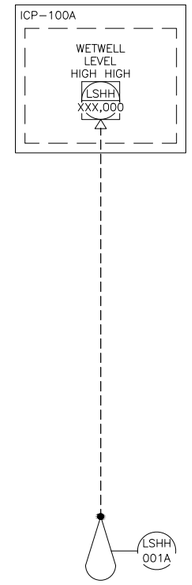

REFERENCES

GENERAL NOTES:

1. USE WIRE NUT TO EXTEND SHIELD TO INSTRUMENT GROUND.

LEGEND:

- ◆ CONTRACTOR TERMINATIONS (6 TERMINATIONS)
- ISOLATION VALVE
- CUT AND TAPE SHIELD

OPERATOR DISPLAY

TAG NAME: WXXX–XXX–XXX–XXX
FUNCTION: WETWELL LEVEL HIGH HIGH
SCALE: N/A
ACTION: CLOSE ON HIGH HIGH
GRAPHIC: TBD

EXAMPLE

FOR SEALS AND SIGNATURES

(PROJECT NAME)
INSTRUMENTATION & CONTROLS
WETWELL HIGH HIGH LEVEL LOOP SHEET
DESCHUTES COUNTY, OREGON

REVISIONS:

(CONSULTANT ENGINEER NAME, ADDRESS & PHONE NUMBER)

DESIGNED BY: XXX
DRAWN BY: XXX
SCALE: NONE
FILE: E-013.dwg
DATE:

VERIFY SCALES
0 1"
BAR EQUALS ONE INCH ON ORIGINAL DRAWING

SHEET:
E-013

COB # (XXXXXX)

FOR SAMPLE ONLY

RECORD DRAWINGS

REVISIONS DRAWN BY: XX DATE: XX/XX/XX

THESE RECORD DRAWINGS HAVE BEEN PREPARED, IN PART, ON THE BASIS OF INFORMATION COMPILED BY OTHERS. THEY ARE NOT INTENDED TO REPRESENT IN DETAIL THE EXACT LOCATION, TYPE OF COMPONENT NOR MANNER OF CONSTRUCTION. THE ENGINEER WILL NOT BE RESPONSIBLE FOR ANY ERRORS OR OMISSIONS WHICH HAVE BEEN INCORPORATED INTO THE RECORD DRAWINGS.

FIELD

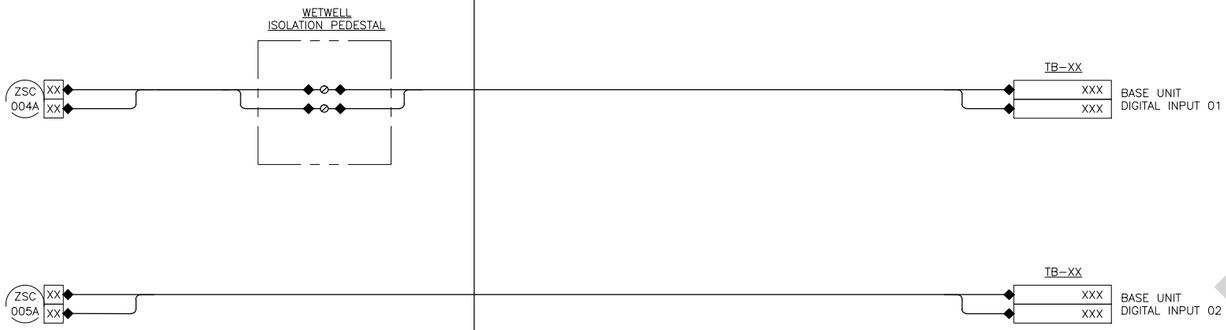

INSTRUMENT CONTROL PANEL
WXXX–ICP–XXX

SYSTEM CONFIGURATION

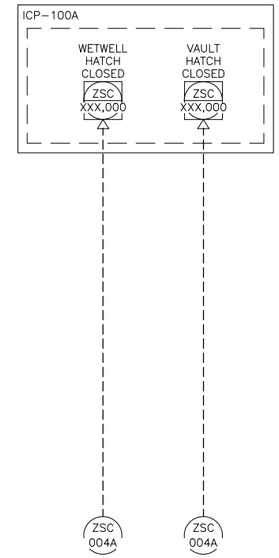

REFERENCES

GENERAL NOTES:

1. USE WIRE NUT TO EXTEND SHIELD TO INSTRUMENT GROUND.

LEGEND:

- ◆ CONTRACTOR TERMINATIONS (12 TERMINATIONS)
- ISOLATION VALVE
- CUT AND TAPE SHIELD

OPERATOR DISPLAY

TAG NAME: WXXX–XXX–XXX–XXX
FUNCTION: WETWELL HATCH CLOSED
SCALE: N/A
ACTION: CLOSE WHEN HATCH IS CLOSED
GRAPHIC: TBD

TAG NAME: WXXX–XXX–XXX–XXX
FUNCTION: VAULT HATCH CLOSED
SCALE: N/A
ACTION: CLOSE WHEN HATCH IS CLOSED
GRAPHIC: TBD

EXAMPLE

FOR SAMPLE ONLY

RECORD DRAWINGS

REVISIONS DRAWN BY: XX DATE: XX/XX/XX

THESE RECORD DRAWINGS HAVE BEEN PREPARED, IN PART, ON THE BASIS OF INFORMATION COMPILED BY OTHERS. THEY ARE NOT INTENDED TO REPRESENT IN DETAIL THE EXACT LOCATION, TYPE OF COMPONENT NOR MANNER OF CONSTRUCTION. THE ENGINEER WILL NOT BE RESPONSIBLE FOR ANY ERRORS OR OMISSIONS WHICH HAVE BEEN INCORPORATED INTO THE RECORD DRAWINGS.

FOR SEALS AND SIGNATURES

(PROJECT NAME)
INSTRUMENTATION & CONTROLS
HATCH INTRUSION LOOP SHEET

DESCHUTES COUNTY, OREGON

REVISIONS:

(CONSULTANT ENGINEER NAME, ADDRESS & PHONE NUMBER)

DESIGNED BY: XXX
DRAWN BY: XXX
SCALE: NONE
FILE: E-014.dwg
DATE:

VERIFY SCALES
0 1"
BAR EQUALS ONE INCH ON ORIGINAL DRAWING

SHEET: E-014

COB # (XXXXXX)

FIELD

INSTRUMENT CONTROL PANEL
WXXX–ICP–XXX

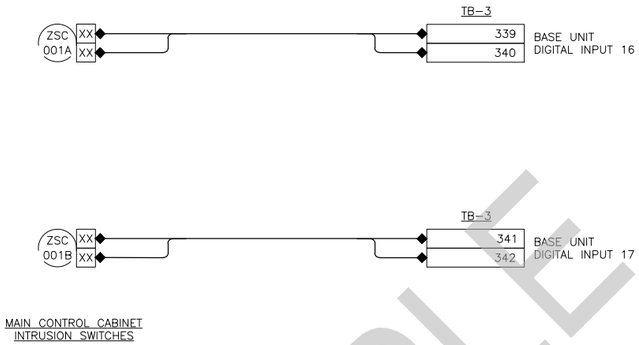

SYSTEM CONFIGURATION

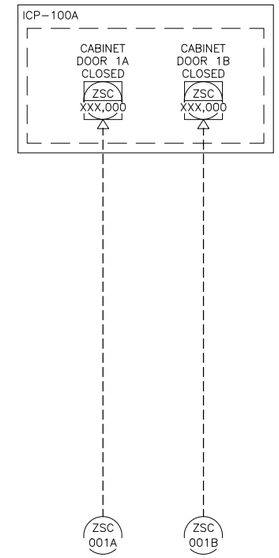

REFERENCES

GENERAL NOTES:

1. USE WIRE NUT TO EXTEND SHIELD TO INSTRUMENT GROUND.

LEGEND:

- ◆ CONTRACTOR TERMINATIONS (0 TERMINATIONS)
- ISOLATION VALVE
- CUT AND TAPE SHIELD

OPERATOR DISPLAY

TAG NAME: WXXX–XXX–XXX–XXX
FUNCTION: MAIN CONTROL CABINET DOOR 1A CLOSED
SCALE: N/A
ACTION: CLOSE WHEN DOOR IS CLOSED
GRAPHIC: TBD

TAG NAME: WXXX–XXX–XXX–XXX
FUNCTION: MAIN CONTROL CABINET DOOR 1B CLOSED
SCALE: N/A
ACTION: CLOSE WHEN DOOR IS CLOSED
GRAPHIC: TBD

EXAMPLE

FOR SAMPLE ONLY

RECORD DRAWINGS

REVISIONS DRAWN BY: XX DATE: XX/XX/XX

THESE RECORD DRAWINGS HAVE BEEN PREPARED, IN PART, ON THE BASIS OF INFORMATION COMPILED BY OTHERS. THEY ARE NOT INTENDED TO REPRESENT IN DETAIL THE EXACT LOCATION, TYPE OF COMPONENT NOR MANNER OF CONSTRUCTION. THE ENGINEER WILL NOT BE RESPONSIBLE FOR ANY ERRORS OR OMISSIONS WHICH HAVE BEEN INCORPORATED INTO THE RECORD DRAWINGS.

FOR SEALS AND SIGNATURES

(PROJECT NAME)
INSTRUMENTATION & CONTROLS
MAIN CONTROL CAB INTRUSION LOOP SHEET
DESCHUTES COUNTY, OREGON

REVISIONS:

(CONSULTANT ENGINEER NAME, ADDRESS & PHONE NUMBER)

DESIGNED BY: XXX
DRAWN BY: XXX
SCALE: NONE
FILE: E-015.dwg
DATE:

VERIFY SCALES
0 1"
BAR EQUALS ONE INCH ON ORIGINAL DRAWING

SHEET: E-015

COB # (XXXXXX)